REV	DESCRIPTION	BY DATE	APPD
A	ER052866	JI 12/15/14	MS

NOTES: UNLESS OTHERWISE SPECIFIED

1. FOR USE WITH RG-316 U/D OR EQUIVALENT.
2. MATERIAL SPECIFICATIONS:
   INSULATORS: PTFE, COLOR - NATURAL
   FERRULE: COPPER
   ALL OTHER METAL PARTS: BRASS
3. FINISH SPECIFICATIONS:
   CONTACT: .000003 MIN THICK GOLD OVER .000050 MIN THICK NICKEL
   ALL OTHER METAL: THIN GOLD OVER .000050 MIN THICK COPPER
4. ELECTRICAL SPECIFICATIONS:
   IMPEDANCE: 50 OHMS
5. CONTACT, FERRULE, LOCK WASHER, AND HEX NUT SHIPPED LOOSE.
6. CRIMPED FERRULE (.128 HEX) AND SOLDER TO CONTACT.

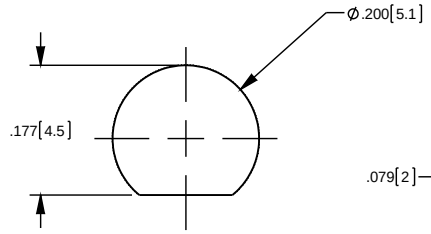

RECOMMENDED MOUNTING HOLE

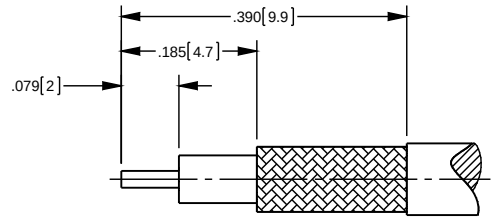

RECOMMENDED CABLE STRIPPING DIM'S

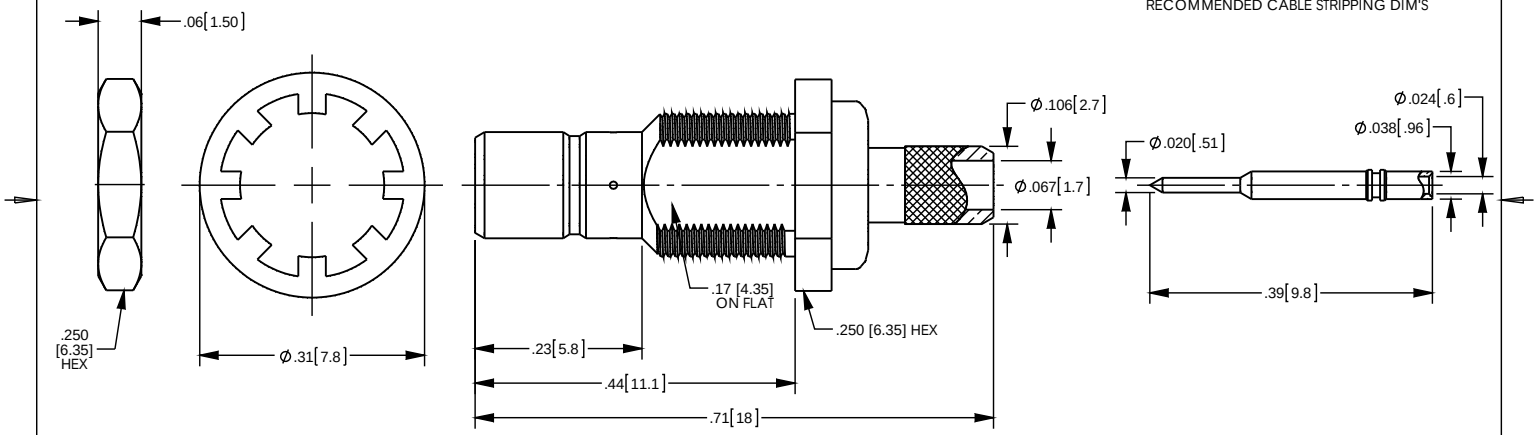

CATALOG P/N: 1021A204M

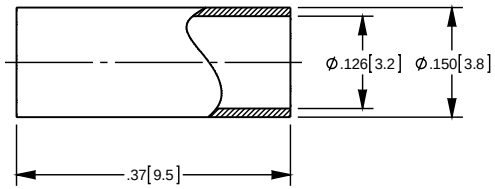

PER ASME Y14.5M-1994
UNLESS OTHERWISE SPECIFIED:
DIMENSIONS ARE IN INCHES [MM]
TOLERANCES:
DECIMAL: .XX [X.X] ± .01 [0.3]
.XXX [X.XX] ± .005 [0.13]
.XXXX [X.XXX] ± .XXXX
ANGLES: ± 2° SCALE: 5:1

WINCHESTER ELECTRONICS
Winchester Electronics Corporation
199 Park Road Ext Suite 104
Middlebury, Connecticut 06762

CUSTOMER SALES DRAWING

THIRD ANGLE

SMB CRIMP JACK
FOR RG-174/U, 188A/U, 316/U CABLE

DRAWN	DATE	APPROVED	DATE
JI	12/15/2014	SM	12/19/2014
APPROVED	DATE	APPROVED	DATE
MS	12/15/14	XXX	XX/XX/XX

A	SD1021A204M	SHT 1	OF 1	REV A

DMF029 B