SYMBOL DEFINITION		MISSING SYMBOLS
A DIMENSION WITHOUT AN INSPECTION REPORT SYMBOL (□) DOES NOT REQUIRE INSPECTION. IT MAY BE CONTROLLED ON THE INDIVIDUAL COMPONENT DRAWING.	TOTAL NO OF INSPECTIONS REQUIRED: 11	NO MISSING SYMBOL NUMBER
	LAST NO. USED: 9	

DRG STATUS DATE	STS	REV	SVP	CHG	ZONE	REVISION HISTORY	AUTH	DR	APVD 1	APVD 2
19JN00	R	D2	-	-	-	CLEARED REV COLUMN, REDRAWN TO PD AND WIN WELD FORCE WAS 250 LBS.	405107	WRS	KCB	LCC
28SE11	R	D3	-	-	-	DIM .387±.005 WAS .387 +.005/-.015	415561	CBG	CBG	ERW

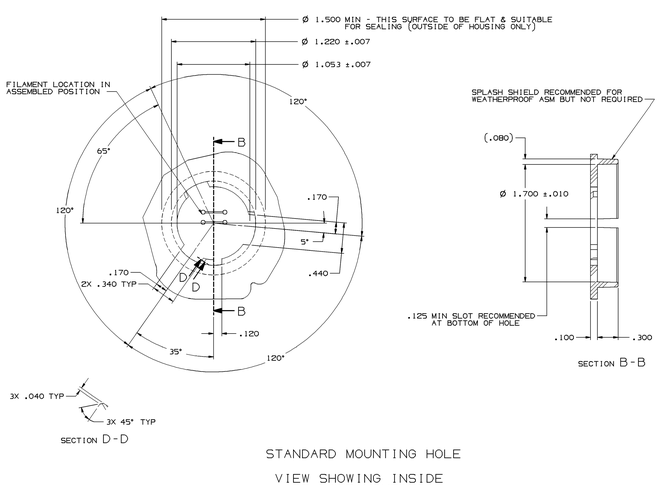

STANDARD MOUNTING HOLE

VIEW SHOWING INSIDE OF LAMP HOUSING

SCALE 2:1

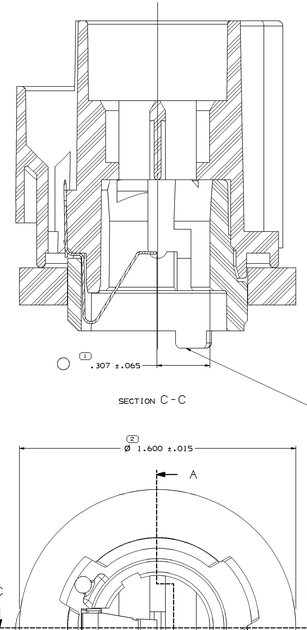

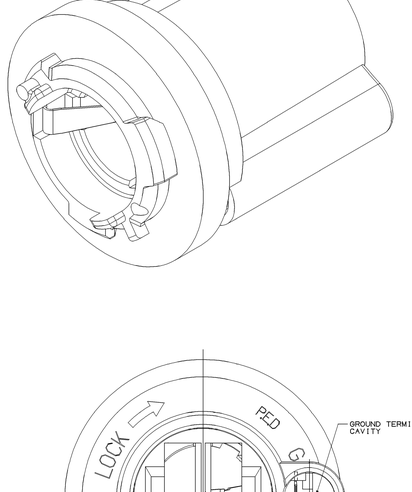

FINAL ASSEMBLY INFORMATION

SCALE 2:1

NOTES

1. UNLESS OTHERWISE SPECIFIED AND/OR INDICATED:

   DIMENSIONS ARE TO FACE OF VIEW SHOWN AND AUTOMATICALLY ROUNDED BY COMPUTER FOR INSPECTION (SEE MATH MODEL FOR PRECISE DIMENSIONS). FOR ALL OTHER DIMENSIONS NOT SHOWN BUT REQUIRED FOR TOOL BUILD, SEE MATH MODEL FOR PRECISE TOOL PATH DATA.

2. WELD MUST WITHSTAND A MIN FORCE OF 90 LBS APPLIED PARALLEL TO ℄ OF LAMP SOCKET ASM.
3. THIS PRODUCT IS NOT CATEGORIZED AS AN APPEARANCE ITEM. MINOR IMPERFECTIONS INCLUDING, BUT NOT LIMITED TO, FLOW MARKS, COLOR BLEMISHES, GATE VESTIGE, AND SOFT FLASH THAT DO NOT AFFECT THE FIT, FORM, OR FUNCTION OF THE PART ARE PERMISSIBLE PER NAP 4.10-1B.
4. ULTRASONIC WELD INSERT TO HOUSING PER POS-2112.
5. FILAMENT CONTACT TO EXERT 1.1 LBS MIN FORCE PER CONTACT ON MIN BULB.
6. REMOVAL OF THESE PROJECTIONS DURING ASSEMBLY PROCESS IS PERMISSIBLE.
7. FOR VIGILITE APPLICATION DRILL OUT INNER WALL FROM BULB END USING A 1/32 DRILL, THEN ASSEMBLE VIGILITE LEAD FROM CABLE END OF SOCKET.
8. TORQUE REQUIRED TO INSTALL SOCKET IN PROPER MOUNTING HOLE SHALL BE LESS THAN 17 IN LBS.
9. THIS PART SHALL BE MOISTURE PROOF PER ESA-515, AND WHEN SUBJECTED TO QUALITY CONTROL TESTING AT 2 PSI.
10. THIS PART ACCEPTS THE FOLLOWING COMPONENTS OR EQUIVALENT:

    TERMINAL 12004917
    GROUND TERMINAL 12103555
    BULB 09438848

12010386	12124573	12124572	12020720	12103626
PART NO	BODY	INSERT	GASKET	GRD TERMINAL

DRAWING TEMPLATE 12010386

SIZE	SCALE	FORMAT	SHEET NO	SHEET	REV	SVP
A1x3	5:1	2 OF 2	1 OF 1	R	D3	-

DWG TYPE: PART DRAWING

STYLE

VOLUME (CAT): SYSTEM CODE: D

UNLESS OTHERWISE SPECIFIED

THIS DOCUMENT IS IN ACCORDANCE WITH ASME Y14.5M-1994 AS INTERPRET BY THE IN GLOBAL STANDARDIZING THE DELPHI DIMENSIONING & TOLERANCING SYSTEM. DIMENSIONS OF FEATURES MAY BE MADE DEPENDENT PER-ANALOGS OF SYTAN REFERENCE.

ALL DIMENSIONS ARE IN INCHES

REFERENCE

(B) PROCESS SENSITIVE DIMENSION

DIMENSIONS ENCLOSED IN ( ) INDICATE REFERENCE DIMENSION, AND NO TOLERANCE LIMITS ARE ESTABLISHED

DIMENSIONAL TOLERANCES					
FRACTIONAL	ANGULAR	DECIMAL			
±1/64	±1/2°	±.010	±.005	±.002	(±.100)
TOLERANCE UNLESS OTHERWISE SPECIFIED					
±.100	±.050	±.010	±.005	±.002	±.001
±.000	±.000	±.000	±.000	±.000	±.000
MODULAR TOLERANCE: 3.1					

THIRD ANGLE PROJECTION

DO NOT SCALE

USE MATH DATA

NX

DELPHI

DELPHI PACKARD ELECTRICAL/ELECTRONIC ARCHITECTURE WARREN, OH

		DATE
DR		
APVD1	LOUIS M. RUBINIC	05JL78
APVD2	D.E. THIRY	10JL78
APVD3	A. VAN SLYKE	11JL78
APVD4		
APVD5		

SUBSTRATES OF CONFORM AND RECYCLED CONTENT PER DELPHI (2PH002)

FINISH: SEE DRAWING

DRAWING NAME: ASM CONN 3 F LP SOC C2 MODULAR

DRAWING TEMPLATE 12010386

SIZE	SCALE	FORMAT	SHEET NO	SHEET	REV	SVP
A1x3	5:1	2 OF 2	1 OF 1	R	D3	-

12010386