DO NOT SCALE

D

THIS DRAWING AND DESIGN HEREON CONSTITUTES A PROPRIETARY DESIGN OF PACKARD ELECTRIC DIVISION AND IS NOT TO BE DUPLICATED OR REPRODUCED WITHOUT AUTHORITY OF PACKARD ELECTRIC DIVISION

DRAWING NO. 1201 0444

DATE	SYM.	REVISION RECORD	AUTH	DR.	CK.
3-15-78	A	RELEASED	68005	Jm	DT
01FE79	–	REVISED PICTURE	67812	DY	DT
02AU85	–	REMOVED "P.E.D" & RELOCATED			
		CABLE "I.D." NUMBER	99975	SM	JH
15JL86	–	REVISED PICTURE	107565	As	DKA

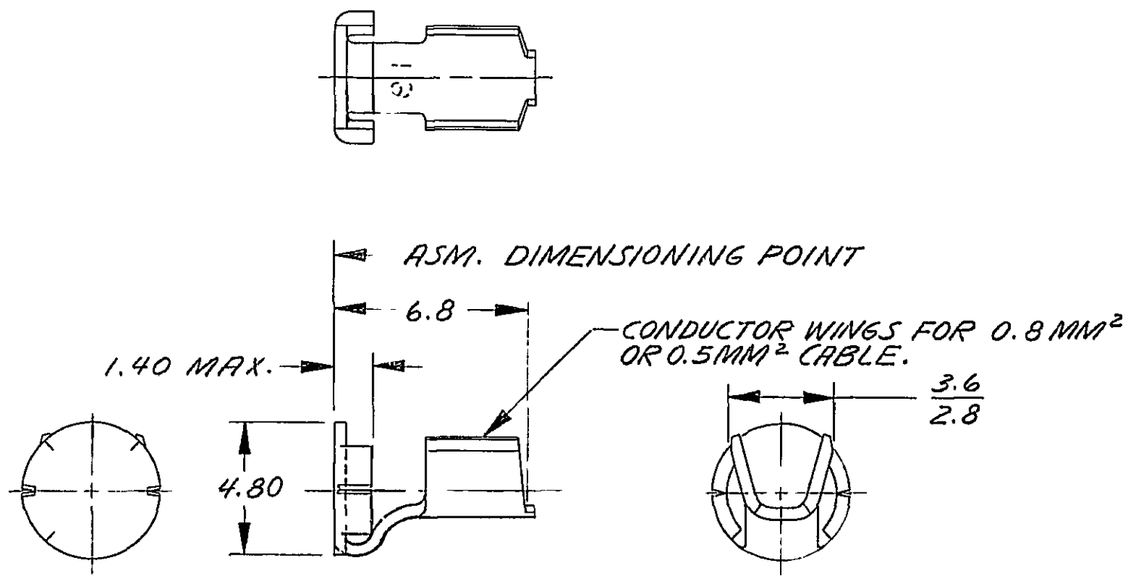

C03D1382

METRIC

DIMENSIONS ARE IN MILLIMETRES
UNLESS OTHERWISE SPECIFIED

P. N. C. CODE

CODE NO. 6900	TOLERANCE UNLESS OTHERWISE SPECIFIED DECIMAL: ONE PLACE ± 0.3, TWO PLACE ± 0.15 ANGULAR ±	
QC		
DWG DATE 7-15-77	SCALE NONE	DR. Shawn S. Margraves 4-5-78
EST NO.		CK R.E. Shirey — DATE 4-12-78
REFERENCE NO. 12010433 'C' SIZE		APPR M.J. Bejuelo — DATE 4-12-78
		APPR — DATE

MATERIAL SPEC. 0.46 THICK SAE CA260 BRASS

NAME TERMINAL-CONTACT-BUTTON TYPE

PART NO 1201 0444 OUTLINE DRAWING

SIZE B

PACKARD ELECTRIC DIVISION
GENERAL MOTORS CORPORATION
WARREN, OHIO

99-0-1146
CHEV-V

	A	R
63		X
74		X
300		
320		
330		X
350		X
PEB	X	
374		
375		
500		
552		
874-1		
874-2		
900		X
952		X
952T		
1074		
1174		X
1374		X

100R 88-V 4471A

PACKARD ELECTRIC