D

THIS DRAWING AND DESIGN HEREON CONSTITUTES A PROPRIETARY DESIGN OF PACKARD ELECTRIC DIVISION AND IS NOT TO BE DUPLICATED OR REPRODUCED WITHOUT AUTHORITY OF PACKARD ELECTRIC DIVISION.

DO NOT SCALE

PART NO. 1206 6454

PACKARD ELECTRIC DIVISION
GENERAL MOTORS CORPORATION
WARREN, OHIO

197A

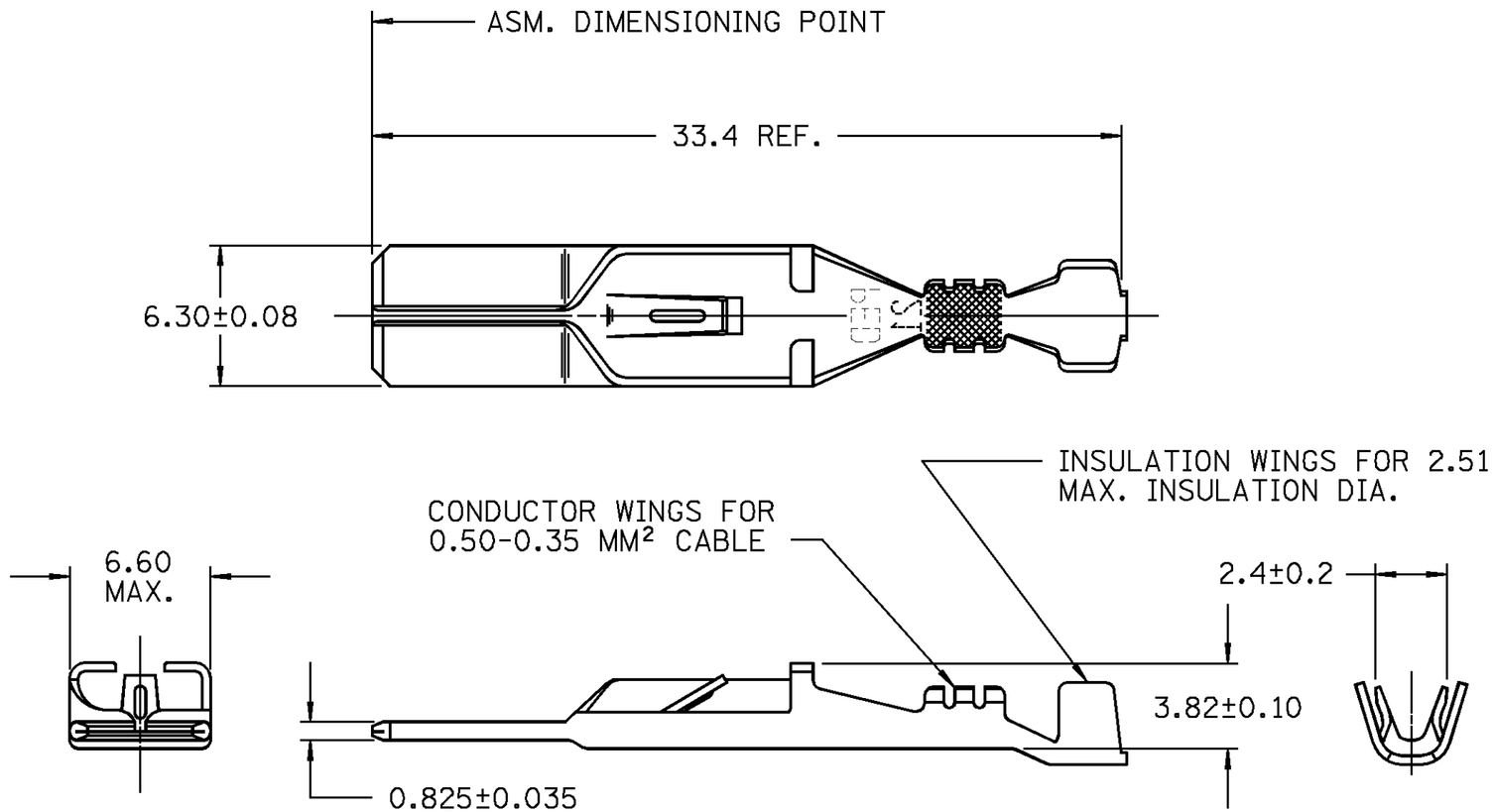

NOTE —— MATING TERMINAL 12015832 OR EQUIVALENT.

DATE	SYM	REVISION RECORD	AUTHORITY	DR	CK
20JA89	—	REDRAWN & REVISED -			
		REV. LEVEL REMAINS AT "A"	123392	TPM	FH
01N063	B	REVISED MATERIAL SPEC	157145	TEB	TEB

PED/INTERGRAPH EMS

FILE SPEC: $$$$USER$$$$ DGN$SPECIFICATION$$$$$$$$$$$$ $$$$$SYTIME$$$$$$

THIRD ANGLE PROJECTION

METRIC
DIMENSIONS ARE IN MILLIMETERS UNLESS OTHERWISE SPECIFIED.

CODE NO. 6900

Q.C.

TOLERANCE UNLESS OTHERWISE SPECIFIED
DECIMAL: ONE PLACE ± 0.3, TWO PLACE ± 0.15
ANGULAR ±2°

DWG. DATE 31DE86 | SCALE NONE | DR. J.KRAUSE 31DE86

EST. NO. | CK. F.HESTON | DATE 05JA87

REFERENCE NO. SHEET 1
12020124 "E" SIZE | APPR. J.R.SAVICH | DATE 05JA87

APPR. | DATE

MATERIAL SPEC. 0.381 THK. SAE CA 425 TIN BRASS - TIN PLATED

NAME TERM M M/P 630 SER

PART NO. 1206 6454
OUTLINE DRAWING

SIZE B

PACKARD ELECTRIC