D

THIS DRAWING AND DESIGN HEREON CONSTITUTES A PROPRIETARY DESIGN OF PACKARD ELECTRIC DIVISION AND IS NOT TO BE DUPLICATED OR REPRODUCED WITHOUT AUTHORITY OF PACKARD ELECTRIC DIVISION

DO NOT SCALE

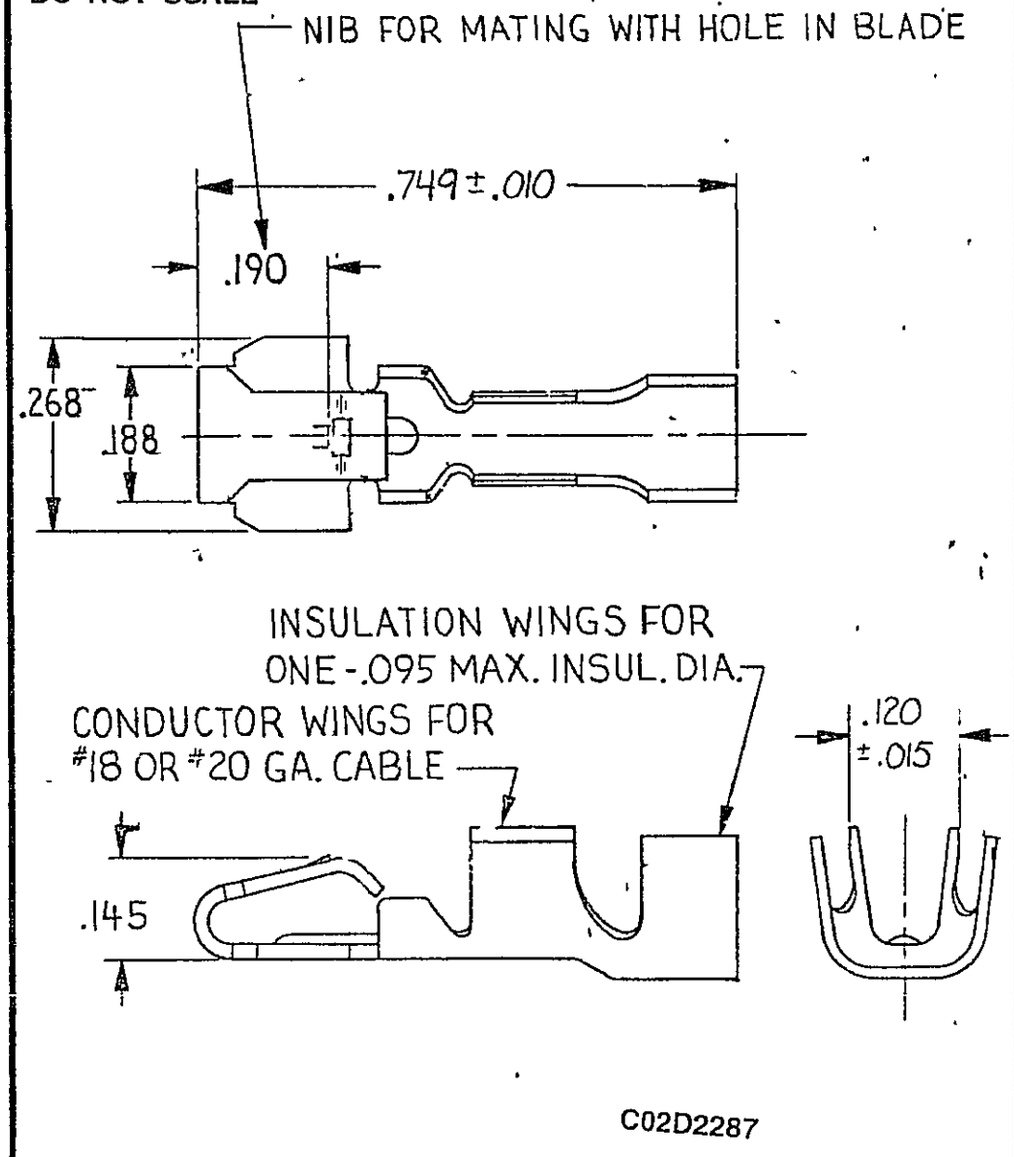

C02D2287

NOTE — TO FIT .0209 × 3/16 BLADE.

PACKARD ELECTRIC DIVISION
GENERAL MOTORS CORPORATION
WARREN, OHIO

DRAWING NO 1210 3555

DATE	SYM	REVISION RECORD	AUTH	DR.	CK
06JL90	A	RELEASED	900005	CDH	CDH

P N C CODE

CODE NO 6900

QC

DWG DATE 02MY79 SCALE NONE

EST NO

REFERENCE NO 8911222 "D" SIZE

TOLERANCE UNLESS OTHERWISE SPECIFIED
DECIMAL THREE PLACE ± .005 TWO PLACE ± .01 ANGULAR ±

DR 06JL90
CK DATE 06JL90
APPR R. Lazzaro DATE
APPR DATE

MATERIAL SPEC .0160 THICK TIN BRASS TIN PLATED

NAME TERM LP SOC GROUND

PART NO. 1210 3555 OUTLINE DRAWING

SIZE A

PACKARD ELECTRIC