S05 SERIES MATRIX

S	0	5	2	0	7	T	A	1	2	2	*	*

- SERIES: S05- INTERNAL THREAD FORM C
- POLES: 2-2 POLE
- THREAD: 07-PG7 M2-M12X1.5
- MATERIAL AND HOUSING COLOUR: T-TRANSPARENT
- CIRCUIT: SEE DETAILS IN CATALOGUE
- VOLTAGE: SEE DETAILS IN CATALOGUE
- SCREW AND GASKET: 1- NBR PROFILE GASKET & SCREW 2- NBR FLAT GASKET & SCREW
- NON STANDARD COMPONENTS: 14-PACKED IN NEUTRAL BAG SA-UL LISTED

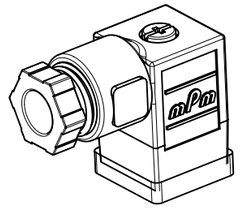

SCALE 1:1

SEE TABLE 1 FOR GASKET TYPES AND SCREW.

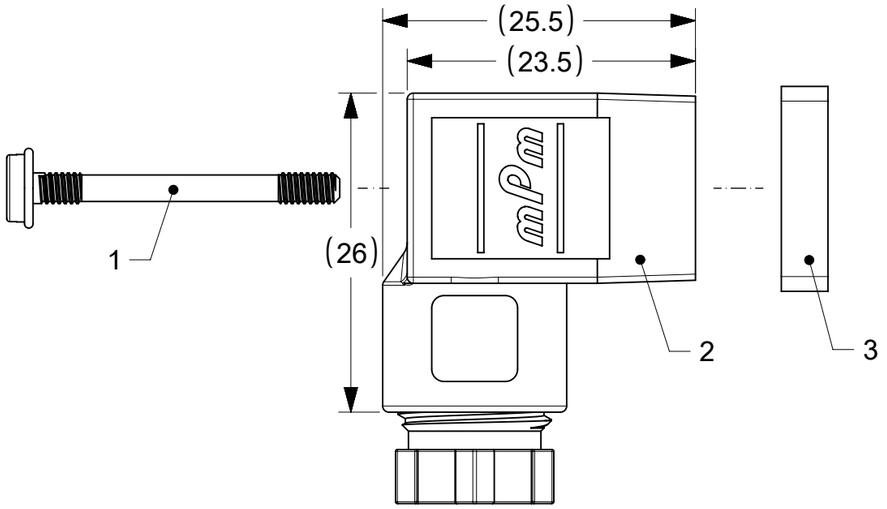

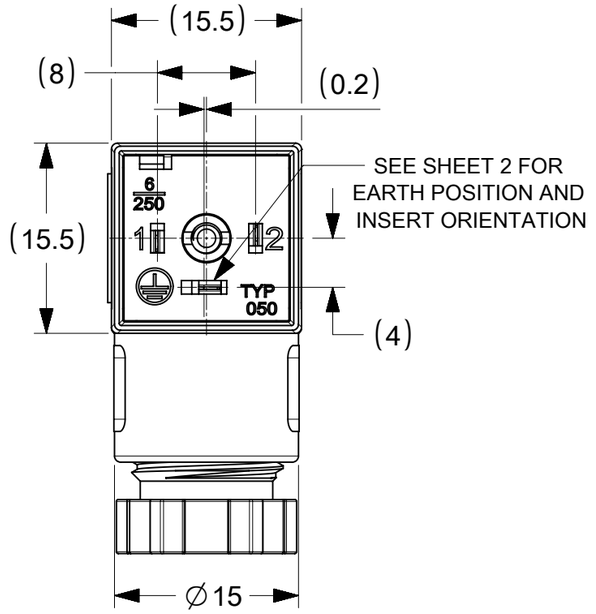

GASKET HIDED FOR CLARITY

ITEM	DESCRRIPTION/OPIS
1	SCREW
2	COVER+INSERT ASSEMBLY
3	GASKET

TABLE 1

PROFILED GASKET	FLAT GASKET	SCREW M2.5x25
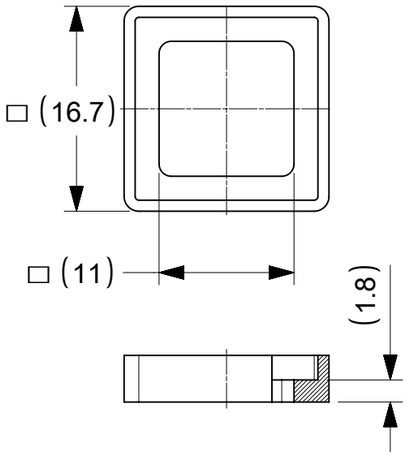	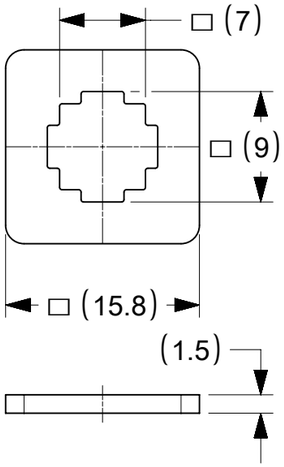	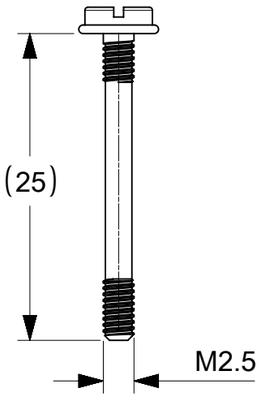

TECHNICAL SPECIFICATION:

OPERATING CURRENT: 10A
CONTACT RESISTANCE: <15 mOhms MAX.

OPERATING TEMPERATURE:
NBR GASKET: -40° TO +90°C
SILICONE GASKET: -40° TO +125°C

THIS DRAWING CONTAINS INFORMATION THAT IS PROPRIETARY TO MOLEX ELECTRONIC TECHNOLOGIES, LLC AND SHOULD NOT BE USED WITHOUT WRITTEN PERMISSION

SYMBOLS	DIMENSION UNITS	SCALE	CURRENT REV DESC: INITIAL RELEASE	molex
= 0	mm	2:1		
= 0	GENERAL TOLERANCES (UNLESS SPECIFIED)		EC NO: 613943	S052 PG07 TRANS XV LED & VDR
= 0	ANGULAR TOL ± 1.0°		DRWN: MDHARMANTI 2018/12/03	
= 0	4 PLACES ±		CHK'D: RSILLER 2019/03/19	
= 0	3 PLACES ±		APPR: RSILLER 2019/03/19	PRODUCT CUSTOMER DRAWING
= 0	2 PLACES ± 0.05		INITIAL REVISION:	DOCUMENT NUMBER 1210640168 · DOC TYPE PSD · DOC PART 000 · REVISION A
= 0	1 PLACE ± 0.3		DRWN: MDHARMANTI 2018/12/03	
= 0	0 PLACES ± 0.5		APPR: RSILLER 2019/03/19	
= 0	DRAFT WHERE APPLICABLE MUST REMAIN WITHIN DIMENSIONS		THIRD ANGLE PROJECTION · DRAWING A3-SIZE · SERIES 121064	MATERIAL NUMBER SEE PART LIST · CUSTOMER GENERAL MARKET · SHEET NUMBER 1 OF 2

DOCUMENT STATUS	P1	RELEASE DATE	2019/03/19 10:06:46

FORMAT: master-tb-mod-A3
REVISION: H
DATE: 2018/01/18

PART LIST AND BOM

ENGINEERING NO.	MOLEX P/N	EARTH	CIRCUIT	VOLTAGE	INDICATOR
S05207TA122	1210640159	H6	A1	24V	RED LED
S05207TA142	1210640160	H6	A1	115V	RED LED
S05207TA152	1210640161	H6	A1	230V	RED LED
S05207TC3H1	1210640165	H6	C3	24V	AMBER LED
S05207TC421	1210640167	H6	C4	24V	RED LED
S05207TC422	1210640168	H6	C4	24V	RED LED
S05207TC442	1210640171	H6	C4	115V	RED LED
S05207TC452	1210640172	H6	C4	230V	RED LED
S05207TC4B2	1210640173	H6	C4	24V	GREEN LED
S05207TC4H2	1210640179	H6	C4	24V	AMBER LED
S05207TC4L2	1210640181	H6	C4	115V	AMBER LED
S05207TC4H1	1210641253	H6	C4	24V	AMBER LED
S05207TA121	1210641318	H6	A1	24V	RED LED
S05207TC422SA	1210641351	H6	C4	24V	RED LED
S05207TA1B1	1210641485	H6	A1	24V	GREEN LED
S052M2TC4B1	1210641486	H6	C4	24V	GREEN LED
S05207TA1B2	1210641564	H6	A1	24V	GREEN LED
S052M2TC322	1210641799	H6	C3	24V	RED LED
S05207TC42214	1210650105	H6	C4	24V	RED LED

INSERT ORIENTATION
HOUSING 2 POLES+1 EARTH

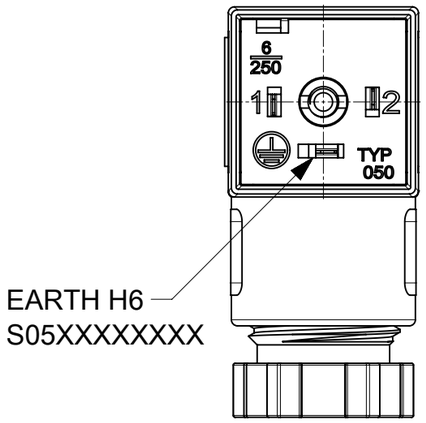

DOCUMENT STATUS	P1	RELEASE DATE	2019/03/19 10:06:46

FORMAT: master-tb-prod-A3
REVISION: H
DATE: 2018/01/18

SYMBOLS
▽ = 0
▽ = 0
▽ = 0
▽ = 0
▼ = 0
▽ = 0
☒ = 0
■ = 0
▽ = 0

THIS DRAWING CONTAINS INFORMATION THAT IS PROPRIETARY TO MOLEX ELECTRONIC TECHNOLOGIES, LLC AND SHOULD NOT BE USED WITHOUT WRITTEN PERMISSION

DIMENSION UNITS	SCALE
mm	2:1

GENERAL TOLERANCES (UNLESS SPECIFIED)

ANGULAR TOL	± 1.0 °
4 PLACES	±
3 PLACES	±
2 PLACES	± 0.05
1 PLACE	± 0.3
0 PLACES	± 0.5

DRAFT WHERE APPLICABLE MUST REMAIN WITHIN DIMENSIONS

CURRENT REV DESC: INITIAL RELEASE

EC NO: 613943
DRWN: MDHARMANTI 2018/12/03
CHK'D: RSILLER 2019/03/19
APPR: RSILLER 2019/03/19

INITIAL REVISION:
DRWN: MDHARMANTI 2018/12/03
APPR: RSILLER 2019/03/19

molex

S052 PG07 TRANS XV LED & VDR

PRODUCT CUSTOMER DRAWING

DOCUMENT NUMBER	DOC TYPE	DOC PART	REVISION
1210640168	PSD	000	A

THIRD ANGLE PROJECTION	DRAWING	SERIES	MATERIAL NUMBER	CUSTOMER	SHEET NUMBER
	A3-SIZE	121064	SEE PART LIST	GENERAL MARKET	2 OF 2

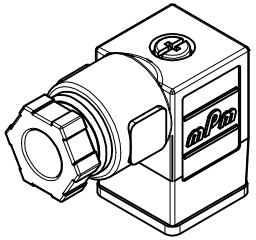

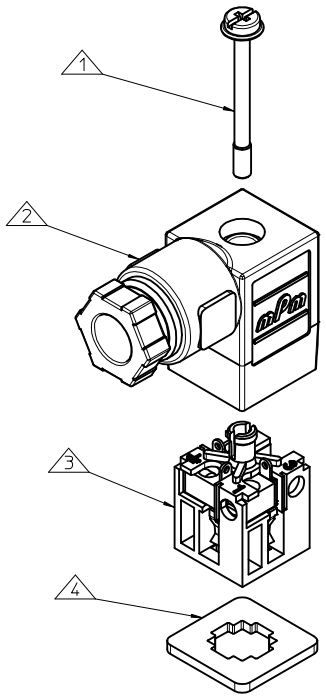

ITEM	DESCRIPTION
1	SCREW
2	COVER ASSEMBLY
3	INSERT ASSEMBLY
4	GASKET

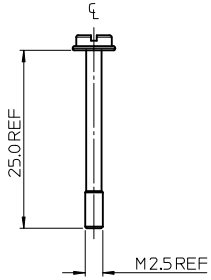

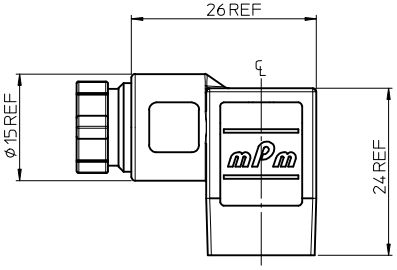

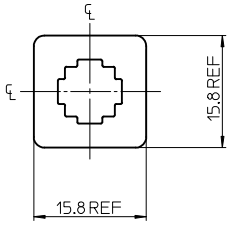

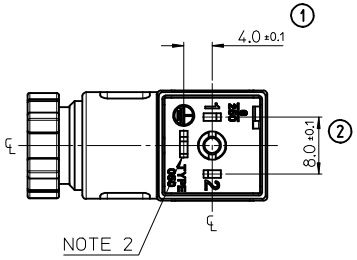

S05207TA122**

SERIES
S05= INTERNAL THREAD FORM C
POLES
2= 2 POLE & 3= 3 POLE
THREAD
07= PG7, M2= M12x1.5
MATERIAL AND HOUSING COLOUR
G= PA6 GRAY, N= PA6 BLACK, W= PA6 BLACK V0, T= TRANSPARENT
CIRCUIT
SEE DETAILS IN CATALOGUE
VOLTAGE
SEE DETAILS IN CATALOGUE
SCREW AND GASKET
1= NBR PROFILE GASKET & SCREW
2= NBR FLAT GASKET & SCREW
3= WHITE SILICON PROFILE GASKET & SCREW
4= WHITE SILICON FLAT GASKET & SCREW
NON STANDARD COMPONENTS
14= PACKED IN NEUTRAL BAG
5N= PACKED IN BOXES OF 200

NOTES
1. PLEASE SEE SHEET 2 FOR CURRENTLY CONFIGURED PART NUMBERS.
   FOR SPECIFIC PART NUMBERS PLEASE CONTACT SALES OR CONSULT
   THE INTELLIGENT PART NUMBERS IN THE TABLE ATTACHED.
2. EARTH POSITION SHOWN, H6.
3. FOR PACKAGING SEE PACKAGING SPEC PK-121065-S05
4. PRODUCT SPEC: SEE PS-121201-001

LAST INSPECTION NUMBER 2

REV	DESCRIPTION	
B	ADDED PART NUMBER EC NO: IPG2013-0751	2012/12/05
	DRWN:JOSHEA	2012/11/23
	CHKD:DMAHER	2012/11/21
	APPR:STGRIFFIN	

QUALITY SYMBOLS
▼=0
▽=0

GENERAL TOLERANCES (UNLESS SPECIFIED)

	mm	INCH
4 PLACES	± ---	± ---
3 PLACES	± ---	± ---
2 PLACES	± 0.1	± ---
1 PLACE	± 0.2	± ---
ANGULAR ±---°		

DRAFT WHERE APPLICABLE MUST REMAIN WITHIN DIMENSIONS

DIMENSION STYLE	MM ONLY
SCALE	2:1
DESIGN UNITS	METRIC
	THIRD ANGLE PROJECTION
DRAWN BY	JOCONNOR
DATE	2011/05/11
CHECKED BY	DMAHER
DATE	2011/05/11
APPROVED BY	EFOLAN
DATE	2011/05/25
MATERIAL NO.	SEE SHEET 2
TITLE	S05 SERIES INTERNAL THREAD
	MOLEX INCORPORATED
DOCUMENT NO.	SD-121064-001
SHEET NO.	1 OF 2
SIZE	A2

THIS DRAWING CONTAINS INFORMATION THAT IS PROPRIETARY TO MOLEX INCORPORATED AND SHOULD NOT BE USED WITHOUT WRITTEN PERMISSION

PART No.	mPm PART No.	DESCRIPTION	CIRCUIT	VOLTAGE	INDICATOR
1210640155	S05207TA022	TYPE C 2P PG7 TRANSPARENT NBR FLAT GASKET	A0	24V	RED LED/LAMP
1210640159	S05207TA122	TYPE C 2P PG7 TRANSPARENT NBR FLAT GASKET	A1	24V	RED LED
1210640160	S05207TA142	TYPE C 2P PG7 TRANSPARENT NBR FLAT GASKET	A1	115V	RED LED
1210640161	S05207TA152	TYPE C 2P PG7 TRANSPARENT NBR FLAT GASKET	A1	230V	RED LED
1210641267	S05207TA1H2	TYPE C 2P PG7 TRANSPARENT NBR FLAT GASKET	A1	24V	AMBER LED
1210641318	S05207TA121	TYPE C 2P PG7 TRANSPARENT NBR PROFILE GASKET	A1	24V	RED LED
1210641485	S05207TA1B1	TYPE C 2P PG7 TRANSPARENT NBR PROFILE GASKET	A1	24V	GREEN LED
1210641564	S05207TA1B2	TYPE C 2P PG7 TRANSPARENT NBR FLAT GASKET	A1	24V	GREEN LED
1210641565	S05207TA1E2	TYPE C 2P PG7 TRANSPARENT NBR FLAT GASKET	A1	230V	GREEN LED
1210641731	S05207TA1H1	TYPE C 2P PG7 TRANSPARENT NBR PROFILE GASKET	A1	24V	AMBER LED
1210641732	S05207TA1L1	TYPE C 2P PG7 TRANSPARENT NBR PROFILE GASKET	A1	115V	AMBER LED
1210641745	S05207TA1L2	TYPE C 2P PG7 TRANSPARENT NBR FLAT GASKET	A1	115V	AMBER LED
1210640164	S05207TC322	TYPE C 2P PG7 TRANSPARENT NBR FLAT GASKET	C3	24V	RED LED
1210640165	S05207TC3H1	TYPE C 2P PG7 TRANSPARENT NBR PROFILE GASKET	C3	24V	AMBER LED
1210641396	S05207TC321	TYPE C 2P PG7 TRANSPARENT NBR PROFILE GASKET	C3	24V	RED LED
1210641730	S05207TC3H2	TYPE C 2P PG7 TRANSPARENT NBR FLAT GASKET	C3	24V	AMBER LED
1210640167	S05207TC421	TYPE C 2P PG7 TRANSPARENT NBR PROFILE GASKET	C4	24V	RED LED
1210640168	S05207TC422	TYPE C 2P PG7 TRANSPARENT NBR FLAT GASKET	C4	24V	RED LED
1210640169	S05207TC4225N	TYPE C 2P PG7 TRANSPARENT NBR FLAT GASKET IN BOX OF 200	C4	24V	RED LED
1210640171	S05207TC442	TYPE C 2P PG7 TRANSPARENT NBR FLAT GASKET	C4	115V	RED LED
1210640172	S05207TC452	TYPE C 2P PG7 TRANSPARENT NBR FLAT GASKET	C4	230V	RED LED
1210640173	S05207TC4B2	TYPE C 2P PG7 TRANSPARENT NBR FLAT GASKET	C4	24V	GREEN LED
1210640175	S05207TC4D2	TYPE C 2P PG7 TRANSPARENT NBR FLAT GASKET	C4	115V	GREEN LED
1210640179	S05207TC4H2	TYPE C 2P PG7 TRANSPARENT NBR FLAT GASKET	C4	24V	AMBER LED
1210640181	S05207TC4L2	TYPE C 2P PG7 TRANSPARENT NBR FLAT GASKET	C4	115V	AMBER LED
1210640182	S05207TC4M2	TYPE C 2P PG7 TRANSPARENT NBR FLAT GASKET	C4	230V	AMBER LED
1210641245	S05207TC4B1	TYPE C 2P PG7 TRANSPARENT NBR PROFILE GASKET	C4	24V	GREEN LED
1210641253	S05207TC4H1	TYPE C 2P PG7 TRANSPARENT NBR PROFILE GASKET	C4	24V	AMBER LED
1210641446	S05207TC4M1	TYPE C 2P PG7 TRANSPARENT NBR PROFILE GASKET	C4	230V	AMBER LED
1210641459	S05207TC424	TYPE C 2P PG7 TRANSPARENT WHITE SILICON FLAT GASKET	C4	24V	RED LED
1210641486	S052M2TC4B1	TYPE C 2P M12x1.5 TRANSPARENT NBR PROFILE GASKET	C4	24V	GREEN LED
1210641751	S05207TC4K2	TYPE C 2P PG7 TRANSPARENT NBR FLAT GASKET	C4	48V	AMBER LED
1210650105	S05207TC42214	TYPE C 2P PG7 TRANSPARENT NBR FLAT GASKET IN NEUTRAL BAG	C4	24V	RED LED
1210650552	S05207TC4525N	TYPE C 2P PG7 TRANSPARENT NBR FLAT GASKET IN BOX OF 200	C4	230V	RED LED
1210640183	S05207TS0H1	TYPE C 2P PG7 TRANSPARENT NBR PROFILE GASKET	S0	24V	AMBER LED
1210641799	S052M2TC322	TYPE C 2P M12x1.5 TRANSPARENT NBR FLAT GASKET	C3	24V	RED LED

SEE SHEET 1
EC NO: IPG2013-0751
DRWN:OSHEA 2012/11/21
CH'KD:DMAHER 2012/11/23
APPR:STGRIFFIN 2012/12/05
DESCRIPTION
B
REV

QUALITY SYMBOLS
▼=0
▽=0

GENERAL TOLERANCES (UNLESS SPECIFIED)

	mm	INCH
4 PLACES	± ---	± ---
3 PLACES	± ---	± ---
2 PLACES	± 0.1	± ---
1 PLACE	± 0.2	± ---
ANGULAR ±---°		

DRAFT WHERE APPLICABLE MUST REMAIN WITHIN DIMENSIONS

DIMENSION STYLE: MM ONLY
SCALE: 2:1
DESIGN UNITS: METRIC
THIRD ANGLE PROJECTION

DRAWN BY: JOCONNOR DATE: 2011/05/11
CHECKED BY: DMAHER DATE: 2011/05/11
APPROVED BY: EFOLAN DATE: 2011/05/25

TITLE: S05 SERIES INTERNAL THREAD

MOLEX INCORPORATED

MATERIAL NO.: SEE CHART
DOCUMENT NO.: SD-121064-001
SHEET NO.: 2 OF 2
SIZE: A2

THIS DRAWING CONTAINS INFORMATION THAT IS PROPRIETARY TO MOLEX INCORPORATED AND SHOULD NOT BE USED WITHOUT WRITTEN PERMISSION

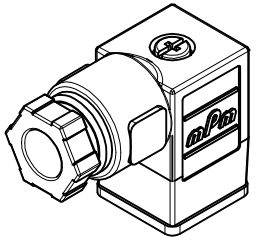

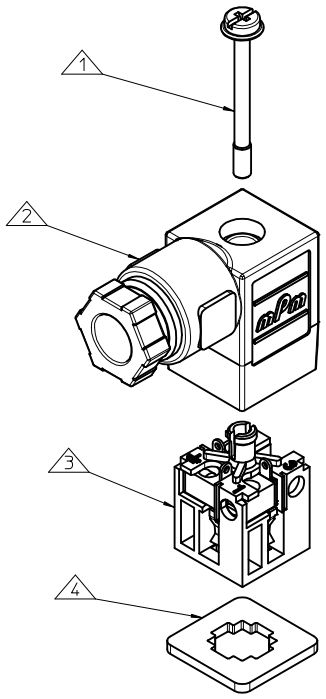

ITEM	DESCRIPTION
1	SCREW
2	COVER ASSEMBLY
3	INSERT ASSEMBLY
4	GASKET

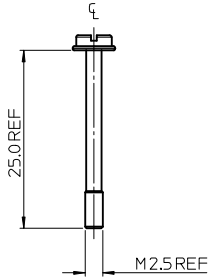

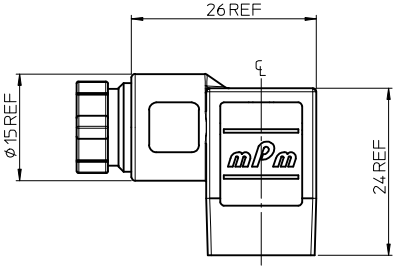

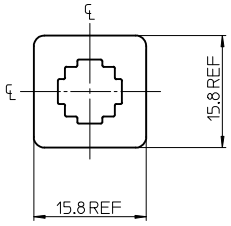

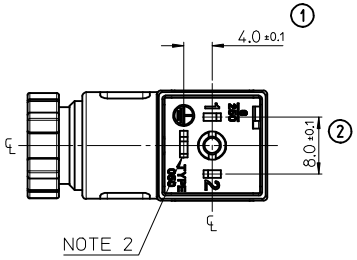

S05207TA122**

SERIES
S05= INTERNAL THREAD FORM C
POLES
2= 2 POLE & 3= 3 POLE
THREAD
07= PG7, M2= M12x1.5
MATERIAL AND HOUSING COLOUR
G= PA6 GRAY, N= PA6 BLACK, W= PA6 BLACK V0, T= TRANSPARENT
CIRCUIT
SEE DETAILS IN CATALOGUE
VOLTAGE
SEE DETAILS IN CATALOGUE
SCREW AND GASKET
1= NBR PROFILE GASKET & SCREW
2= NBR FLAT GASKET & SCREW
3= WHITE SILICON PROFILE GASKET & SCREW
4= WHITE SILICON FLAT GASKET & SCREW
NON STANDARD COMPONENTS
14= PACKED IN NEUTRAL BAG
5N= PACKED IN BOXES OF 200

NOTES
1. PLEASE SEE SHEET 2 FOR CURRENTLY CONFIGURED PART NUMBERS.
   FOR SPECIFIC PART NUMBERS PLEASE CONTACT SALES OR CONSULT
   THE INTELLIGENT PART NUMBERS IN THE TABLE ATTACHED.
2. EARTH POSITION SHOWN, H6.
3. FOR PACKAGING SEE PACKAGING SPEC PK-121065-S05
4. PRODUCT SPEC: SEE PS-121201-001

LAST INSPECTION NUMBER 2

REV	DESCRIPTION	
B	ADDED PART NUMBER EC NO: IPG2013-0751	2012/12/05
	DRWN:JOSHEA	2012/11/23
	CHKD:DMAHER	2012/11/21
	APPR:STGRIFFIN	

QUALITY SYMBOLS
▼=0
▽=0

GENERAL TOLERANCES (UNLESS SPECIFIED)

	mm	INCH
4 PLACES	± ---	± ---
3 PLACES	± ---	± ---
2 PLACES	± 0.1	± ---
1 PLACE	± 0.2	± ---
ANGULAR ±---°		

DRAFT WHERE APPLICABLE MUST REMAIN WITHIN DIMENSIONS

DIMENSION STYLE	MM ONLY
SCALE	2:1
DESIGN UNITS	METRIC
	THIRD ANGLE PROJECTION
DRAWN BY	JOCONNOR
DATE	2011/05/11
CHECKED BY	DMAHER
DATE	2011/05/11
APPROVED BY	EFOLAN
DATE	2011/05/25
MATERIAL NO.	SEE SHEET 2
TITLE	S05 SERIES INTERNAL THREAD
	MOLEX INCORPORATED
DOCUMENT NO.	SD-121064-001
SHEET NO.	1 OF 2
SIZE	A2

THIS DRAWING CONTAINS INFORMATION THAT IS PROPRIETARY TO MOLEX INCORPORATED AND SHOULD NOT BE USED WITHOUT WRITTEN PERMISSION