DO NOT SCALE

PART NO 1219 1371

DATE	SYM	REVISION RECORD	AUTH	DR	CK
01SE95	A	PID CREATED	950012	CM	CM
19JA96	A1	WAS PE040230 & RELEASED	960005	CRM	CRM

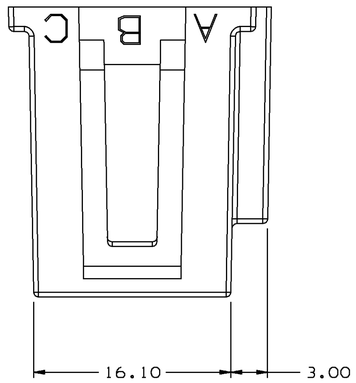

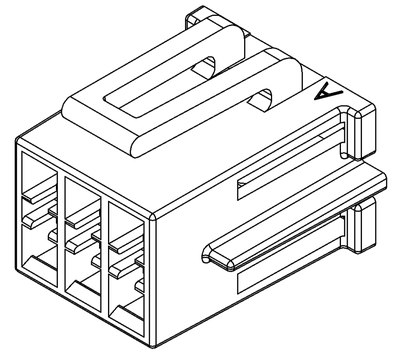

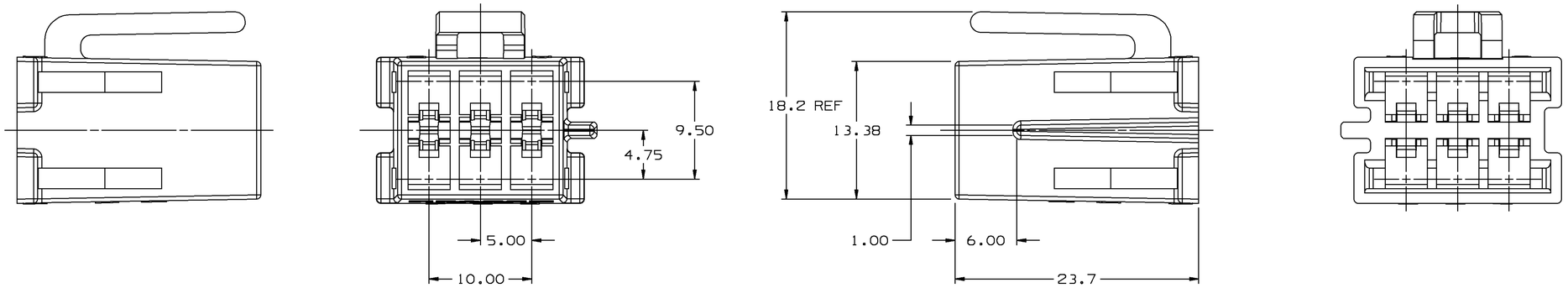

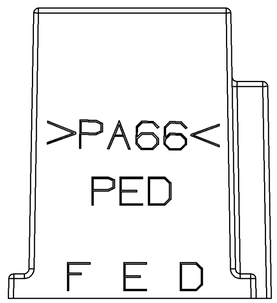

NOTES:

1. UNLESS OTHERWISE SPECIFIED AND/OR INDICATED:
   DIMENSIONS ARE TO FACE OF VIEW SHOWN AND
   AUTOMATICALLY ROUNDED BY COMPUTER FOR INSPECTION.
   (SEE MATH MODEL FOR PRECISE DIMENSION)
   ALL RADII 0.40
   DRAFT IS 1° ON ALL OUTSIDE SURFACES
   LIKE CAVITIES ARE IDENTICAL
   LOCKING FEATURES ARE IDENTICAL

2. MATING COMPONENTS:
   CONNECTOR 12191369 OR EQUIVALENT
   TERMINAL 12110842 OR EQUIVALENT
   TPA 12177263 OR EQUIVALENT (12 REQ'D)
   MAX INSULATION CRIMP MUST BE LESS THAN
   4.70 HIGH OR 4.00 WIDE

3. DIMENSIONS MARKED "REF" ARE FOR REFERENCE ONLY
   AND NO TOLERANCE LIMITS ARE ESTABLISHED.

PART NO 1219 1371

Uigraphics II	METRIC DIMENSIONS ARE IN MILLIMETERS UNLESS OTHERWISE SPECIFIED
THIRD ANGLE PROJECTION	TOLERANCE UNLESS OTHERWISE SPECIFIED DECIMAL: ANGULAR ± 2°
	ONE PLACE ±0.3
CODE NO 6900 / QC	TWO PLACE ±0.15
	DES C. MARGRAVE 01SE95
DWG DATE 01SE95	DR C. MARGRAVE 01SE95
SCALE 4:1	CK C. MARGRAVE 01SE95
REFERENCE NO 12191371 "A0" SIZE	APPR S.A.NORLING 25JA96
	VOL CM³ 2.620
MATERIAL SPEC R0071754 PA66 HS IM-BLK	
NAME CONN 6F M/P 280 FLXLK	
PART NUMBER 1219 1371 PRODUCT INFORMATION DWG	SIZE A1

PACKARD ELECTRIC DIVISION
GENERAL MOTORS CORPORATION
WARREN, OHIO