REV.	DATE	ECR NO.	DESCRIPTION
NC	11/02/10	XXXXXX	INITIAL RELEASE

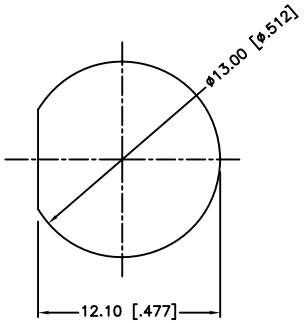

RECOMMENDED MOUNTING HOLE

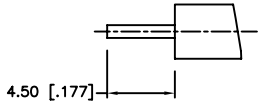

RECOMMENDED CABLE STRIPPING DIM'S

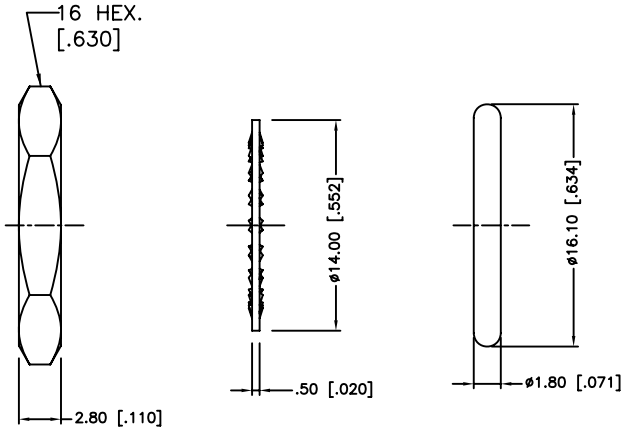

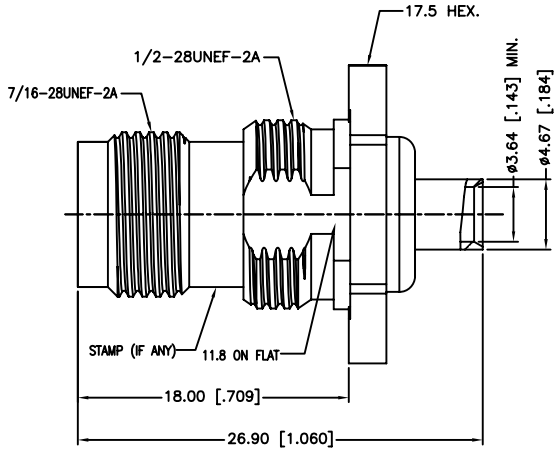

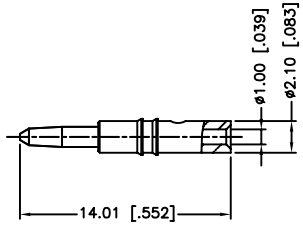

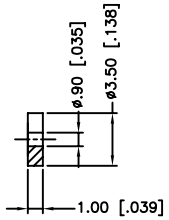

1. CRIMPED CONTACT PIN
   HEX CRIMP SIZE .068"
2. MAX. PANEL THICKNESS=3.5mm
3. IP-67 COMPLIANT

	DESCRIPTION	MATERIAL	FINISH	QTY
10	HEX NUT	BRASS	NICKEL	1
9	LOCK WASHER	BRASS	NICKEL	1
8	GASKET	SILICONE	RED	1
7	INSULATOR	PTFE	NATURAL	1
6	CONTACT PIN	BRASS	GOLD	1
5	BARREL	BRASS	GOLD	1
4	GASKET	N.B.R	BLACK	1
3	O-RING	SILICONE	RED	1
2	INSULATOR	PTFE	NATURAL	1
1	BODY	BRASS	NICKEL	1

UNLESS OTHERWISE SPECIFIED DIMENSIONS ARE IN MILLIMETERS. DIMENSIONS IN [ ] ARE IN INCHES AND FOR CUSTOMER REFERANCE ONLY.

UNLESS OTHERWISE SPECIFIED TOLERANCES FOR MILLIMETERS ARE:
0.5 – 8mm ± 0.20mm
8 – 30mm ± 0.40mm
30 – 120mm ± 0.50mm

UNLESS OTHERWISE SPECIFIED TOLERANCES FOR INCHES ARE:
.020 – .315 = ± 0.007"
.315 – 1.180 = ± 0.015"
1.180 – 4.724 = ± 0.020"

DO NOT SCALE DRAWING

APPROVALS		DATE
DRAWN	M.ZHANG	11/02/10
CHECKED		
ISSUED		
SHEET	1 OF 1	

CAD FILE F:DWG\CONNEX\122401RP-10.DWG

Amphenol Connex

PART DESCRIPTION
TNC REVERSE BULKHEAD DIRECT SOLDER JACK
IP-67 COMPLIANT, (FOR .141" CABLE)

PART NO. 122401RP-10

DWG. NO. 122401RP-10.DWG | REV. NC | SIZE A | SCALE NA