MODEL NO.	PACKAGING
134-1000-017	ONE PCS PER BAG

REV	ECO	DATE
001	ECO-17-0033	12/18/2017

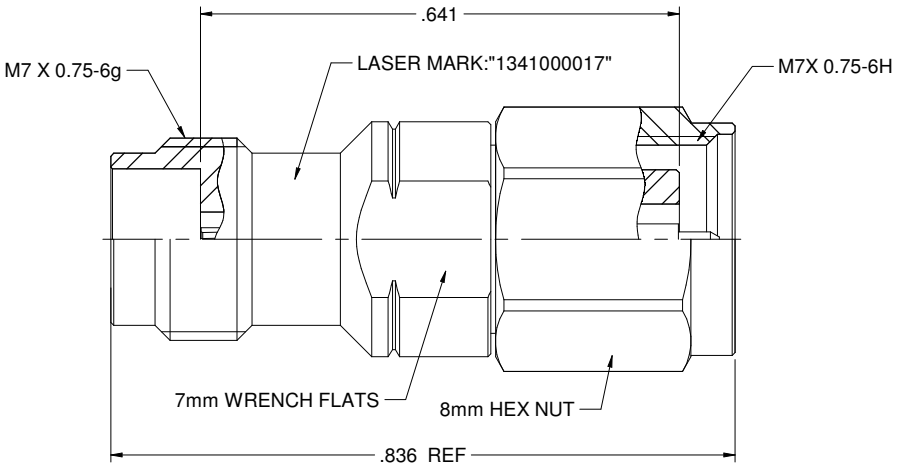

NOTES: UNLESS OTHERWISE SPECIFIED

1. MATERIAL & FINISH:
   1.1 BODY & SHELL: PASSIVATED STAINLESS STEEL
   1.2 CONTACT PIN : GOLD PLATED BERYLLIUM COPPER
   1.3 INSULATOR: ULTEM 1000 AMBER
   1.4 GASKET: SILICONE RED
   1.5 C RING: BERYLLIUM COPPER

2. ELECTRICAL:
   2.1 IMPEDANCE: 50 OHMS
   2.2 FREQUENCY RANGE: 0-50 GHz
   2.3 DIELECTRIC WITHSTANDING VOLTAGE: 500 VRMS MIN
   2.4 VOLTAGE STANDING WAVE RATIO: DC- 26.5GHZ: 1.06 MAX
   26.5- 40 GHZ: 1.10 MAX
   40 - 50 GHZ: 1.15 MAX
   2.5 CONTACT RESISTANCE: CENTER CONTACT: 4 MILLIOHMS MAX
   OUTER CONTACT: 2.5 MILLIOHMS MAX
   2.6 INSULATION RESISTANCE: 5000 MOHM MIN

3. MECHANICAL:
   3.1 ENGAGEMENT/ DISENGAGEMENT FORCE: 0.23 NM MAX
   3.2 COUPLING PROOF TORQUE: 1.65NM MIN (2.4MM)
   3.3 COUPLING NUT RETENTION FORCE: 267 N MIN (2.4MM)
   3.4 CONTACT RETENTION: 20 N MIN
   3.5 DURABILITY: 500 CYCLES MIN

4. ENVIRONMENT:
   4.1 THERMAL SHOCK: MIL-STD-202, METHOD 107, CONDITION B.
   4.2 OPERATING TEMPERATURE: -55 TO 125℃
   4.3 SALT SPRAY: MIL-STD-202, METHOD 101, CONDITION B
   4.4 SHOCK: MIL-STD-202, METHOD 213, CONDITION I
   4.5 VIBRATION: MIL-STD-202, METHOD 204, CONDITION D
   4.6 MOISTURE RESISTANCE: MIL-STD-202, METHOD 106

cinch connectivity solutions

This PROPRIETARY Document is property of Cinch Connectivity Solutions. Information in it is secret, not transferable, and may not be used without understanding that it is not to be reproduced or transmitted in any form without prior written permission.

INTERPRET DRAWING IN ACCORDANCE WITH ASME Y14.5-2009

Model No. 134-1000-017

RoHS2 ☑ 2011/65/EU

Cage Code

3RD ANGLE PROJECTION

UNLESS OTHERWISE SPECIFIED UNITS INCH

.XXX ±.02
.XXXX ±.01
ANGLES ±5°

Drawn by: Betty.Yu

Date: 12/12/2017

Johnson

Title: ADAPTER ASSEMBLY,1.85mm JACK TO 2.4mm PLUG

Drawing No. 134-1000-017

Rev. 001

Size C | DO NOT SCALE DRAWING | Workmanship Std NONE | Sheet 1 of 1