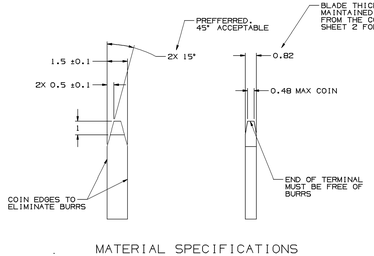


## MATERIAL SPECIFICATIONS

RECOMENDED
BASE METAL - CDA-210, GILDING, EXTRA SPRING TEMPER
PLATING - 0.0005±0.0025 MM THICK TIN

MINIMUMS
ELECTRICAL CONDUCTIVITY - ≥ 20% IACS @ 20°C. USE OF A MATERIAL WITH CONDUCTIVITY < 20% IACS MUST BE APPROVED BY PACKARD ELECTRIC MATERIALS ENGINEERING.

TENSILE STRENGTH - 407 MPa

PLATING - FOR LOW ENERGY (4.5V) AND NON-PASSENGER COMPARMENT POWER CIRCUITS, 0.0005±0.0025 MM. THICK TIN. FOR MATERIALS CONTAINING 10% OR MORE ZINC, AN UNDERPLATE OF COOPER 0.0005±0.0025 MM THICK IS REQUIRED.

BLADE THICKNESS
UNPLATED = 0.813 ± 0.025
TIN PLATED = 0.823 ± 0.030

## MATING BLADE INFORMATION

SCALE 10:1

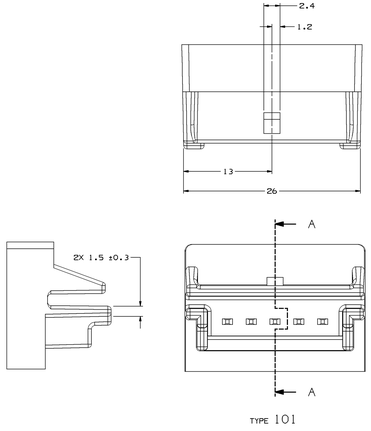


TYPE 101

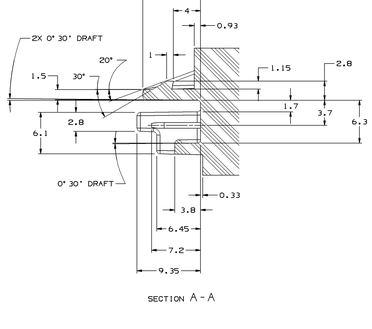


SECTION A-A

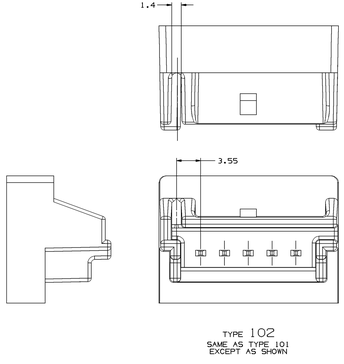


TYPE 102
SAME AS TYPE 101
EXCEPT AS SHOWN

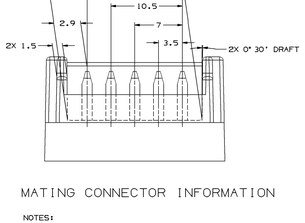


## MATING CONNECTOR INFORMATION

NOTES:

1. UNLESS OTHERWISE SPECIFIED AND/OR INDICATED:
   DIMENSIONS ARE TO FACE OF VIEW SHOWN AND AUTOMATICALLY ROUNDED BY COMPUTER FOR INSPECTION. (SEE MATH MODEL FOR PRECISE DIMENSION)
   ALL RADII 0.50
   DRAFT IS 1° ON ALL OUTSIDE SURFACES
2. RECOMMENDED BODY MATERIAL: POLYESTER OR EQUIVALENT THERMOPLASTIC

| SYMBOL DEFINITION | | MISSING SYMBOLS |
|---|---|---|
| A DIMENSION WITHOUT AN INSPECTION REPORT SYMBOL (□) DOES NOT REQUIRE INSPECTION. IT MAY BE CONTROLLED ON THE INDIVIDUAL COMPONENT DRAWING. | TOTAL NO OF INSPECTIONS REQUIRED 21 | 9-14, 20-53, 61-62 |
| | LAST NO. USED 63 | |

| CHG STATUS | | | | | ZONE | REVISION HISTORY | AUTH | DR | APVD 1 | APVD 2 |
|---|---|---|---|---|---|---|---|---|---|---|
| DATE | STA | REV | N/P | CHG | | | | | | |
| 26JN02 | R | 02 | - | - | - | CLEARED REV COLL 12124997 - MAT'L SPEC WAS PMD0191 001 PBT BLK; ADDED DELPHI LOGO & MAT'L RECYCLING CODE NOTES | 227377 | BYP | BYP | ET |
| 02AU04 | R | 03 | - | - | | ADDED DIM 54 TO PART DRAWING | 257584 | MB | MB | BG |
| 01FE05 | R | 04 | - | - | | 13521091 - RELEASED | 264019 | JPB | JAA | SAN |
| 29MR05 | R | 05 | - | - | | 13521091 - 3.55 WAS 3.4 (2 PLCS), 1.2 WAS 1.5 & 1.4 WAS 1.7; SECONDARY TERMINAL LOCK 12124998 WAS 12065281 | 265214 | MAC | MAC | SAN |
| 24JA06 | R | 06 | - | - | | ALL PARTS - 101 WAS 19,REMOVED SYMBOLS FROM MATING INFORMATION | 276256 | MAK | MAK | DDG |
| 17NO06 | R | 07 | - | - | | 13607185 - RELEASED | 287001 | RH | RH | MDM |

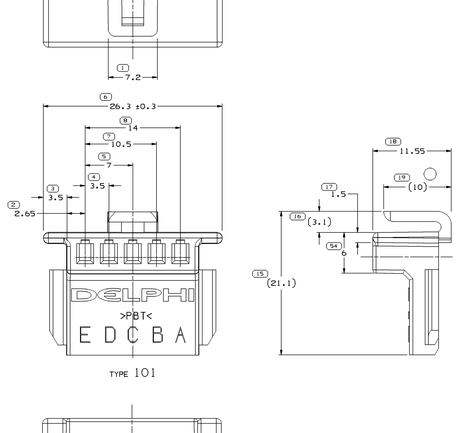


TYPE 101

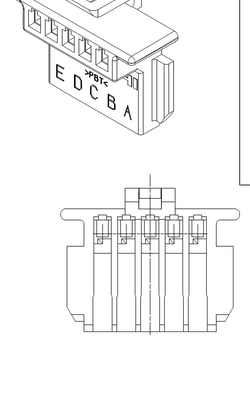


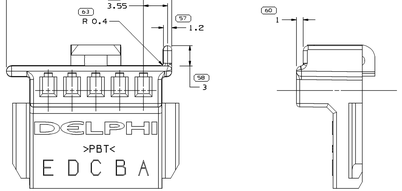


TYPE 102
SAME AS TYPE 101
EXCEPT AS SHOWN

NOTES

1. UNLESS OTHERWISE SPECIFIED AND/OR INDICATED:
   DIMENSIONS ARE TO FACE OF VIEW SHOWN AND AUTOMATICALLY ROUNDED BY COMPUTER FOR INSPECTION (SEE MATH MODEL FOR PRECISE DIMENSIONS). FOR ALL OTHER DIMENSIONS NOT SHOWN BUT REQUIRED FOR TOOL BUILD, SEE MATH MODEL FOR PRECISE TOOL PATH DATA.
2. MATERIAL RECYCLING CODE PER ISO 11469. (2,31X10,1) CHARACTERS AS SHOWN TO BE LOCATED ON ANY EXTERIOR SURFACE. OPTIONAL CONSTRUCTION TO BE NO MATERIAL RECYCLING CODE.
3. REFERENCE MATING COMPONENTS OR EQUIVALENT:
   METHODE SWITCH ASM 20674970
4. THIS PART ACCEPTS THE FOLLOWING COMPONENTS OR EQUIVALENT:
   TERMINAL 12103359
   SECONDARY TERMINAL LOCK 12124998
5. (2,31X10,1) DELPHI CORPORATE BRAND TO BE LOCATED ON ANY EXTERIOR SURFACE, PREFERABLY VISIBLE AT FINAL ASSEMBLY. OPTIONAL CONSTRUCTION FOR EXISTING TOOLING MAY BE "PED".

| PART NO | REV | N/P | STATUS | MATERIAL SPECIFICATION AND COLOR | VOLUME | TYPE |
|---|---|---|---|---|---|---|
| 13607185 | 01 | - | - | M46950DB PBT BLU | 1.456 | 101 |
| 13521091 | 02 | AA | | M46950D3 PBT GRA | 1.457 | 102 |
| 12124997 | A4 | - | - | M46950DZ PBT BLK | 1.456 | 101 |

| DRAWING NUMBER | | | | | | | |
|---|---|---|---|---|---|---|---|
| 12162004 | | | | | | | |
| SIZE | SCALE | SHEET | FRAME NO | SHEET NO | TOTAL | REV | N/P |
| A1x3 | 5:1 | 2 OF 2 | 2 OF 2 | | R | 07 | - |

| 1 PROCESS SENSITIVE DIMENSION |
|---|
| DIMENSIONS ENCLOSED IN () INDICATE REFERENCE DIMENSION, NO 40 TOLERANCE LIMITS ARE ESTABLISHED |

| DIMENSIONAL RANGE (MM) | | | | | | | | | | | |
|---|---|---|---|---|---|---|---|---|---|---|---|
| FROM | 0 | 3 | 6 | 30 | 120 | 315 | 1000 | 2000 | 3150 | 4000 |
| TO | 3 | 6 | 30 | 120 | 315 | 1000 | 2000 | 3150 | 4000 | 5000 |
| TOLERANCE UNLESS OTHERWISE SPECIFIED | | | | | | | | | | |
| ±0.15 | ±0.2 | ±0.3 | ±0.4 | ±0.5 | ±0.6 | ±0.8 | ±1 | ±1.2 | | |

MODULE TOLERANCE ±0.1

DIMENSIONS ARE IN MILLIMETERS

| DRAWING TYPE | |
|---|---|
| PART DRAWING | |
| STYLE | |
| VOLUME CONT | SEE CHART |
| SYSTEM CODE | D |

UNLESS OTHERWISE SPECIFIED

THIS DOCUMENT IS IN ACCORDANCE WITH ASME Y14.100-1998 UNLESS OTHERWISE SPECIFIED.
THIS DOCUMENT CONTAINS PROPRIETARY INFORMATION AND MATERIAL OF DELPHI. THE INFORMATION CONTAINED HEREIN IS TO BE USED ONLY WITH DELPHI PRODUCTS OR PROCESSES AND NOT TO BE DISCLOSED TO THIRD PARTIES WITHOUT WRITTEN AUTHORIZATION. THE RECEIPT OF THIS DOCUMENT IS NOTICE THAT THE RECIPIENT MUST ASSUME THE RESPONSIBILITY OF ENSURING THE SECURITY OF THE DATA. THE RECIPIENT MUST ASSUME THE RESPONSIBILITY FOR ANY DAMAGES RESULTING FROM THE DISCLOSURE OF THE DATA.
ALL DIMENSIONS ARE IN MILLIMETERS

REFERENCE

THIRD ANGLE PROJECTION

DO NOT SCALE

USE MATH DATA

DELPHI
DELPHI PACKARD ELECTRIC SYSTEMS
WARREN, OH

| CHP | DATE |
|---|---|
| APVD1 RON BURNS | 23JUN93 |
| APVD2 OSCAR OCHOA | 06SEP95 |
| APVD3 DART DETTER | 11DEC95 |
| APVD4 | |
| APVD5 | |

SUBSTANCES OF CONCERN AND RECYCLED CONTENT PER DELPHI (DPA900)

| DRAWING TYPE | |
|---|---|
| SEE CHART | |

DRAWING NAME
TAXI CONN F M/P 150 RT ANG

| DRAWING NUMBER | | | | | | | |
|---|---|---|---|---|---|---|---|
| 12162004 | | | | | | | |
| SIZE | SCALE | SHEET | FRAME NO | SHEET NO | TOTAL | REV | N/P |
| A1x3 | 5:1 | 1 OF 2 | 1 OF 2 | | R | 07 | - |

400581