SYMBOL DEFINITION		MISSING SYMBOLS
A DIMENSION WITHOUT AN INSPECTION REPORT SYMBOL ( ) DOES NOT REQUIRE INSPECTION. IT MAY BE CONTROLLED ON THE INDIVIDUAL COMPONENT DRAWING.	TOTAL NO OF INSPECTIONS REQUIRED: 33	4-5
	LAST NO. USED: 29	

DWG STATUS DATE	SYS	REV	N/P	CHG	ZONE	REVISION HISTORY	AUTH	DR	APVD 1	APVD 2
07AU02	R	02	-	-		CLEARED REV COLUMN; ALL PARTS - ADDED NOTE 5	228812	LOA	JAA	DRM
18JN03	R	03	-	-		ALL PARTS - DIM #3 (24.3) WAS 24.3 & N/A WAS 3 FOR PROCESS SENSITIVE DIMENSION	242730	JS	JS	DRM
25SE03	R	04	-	-		15479266-71 - RELEASED	246050	MAC	MAC	DRM
10FE04	R	05	-	-		15431080 - UPDATED PDM ATTRIBUTES	251191	MAM	MAM	DRM
23FE05	R	06	-	-		15431080 - UPDATED PDM ATTRIBUTES	264701	ADK	ADK	KO
22SE05	R	07	-	-		ADDED "SHT 1 OF 2"; 15431080 - CONN WAS 15431115; 15431081 - CONN WAS 15431122; 15431082 - CONN WAS 15431131; 15431083 - CONN WAS 15431114; 15431084 - CONN WAS 15431115; 15431085 - CONN WAS 15431116; ALL PARTS - (5.78 ±0.1 WAS (5.%) ±0.1. ADDED VIEWS & CORRESPONDING DIMS FOR TYPE 102 THROUGH TYPE 106 AND REVISED CHART	272789	EES	EES	SM
17NO05	R	08	-	-		ALL PARTS - REVISED GRAPHICS	274805	PCP	PCP	SFM

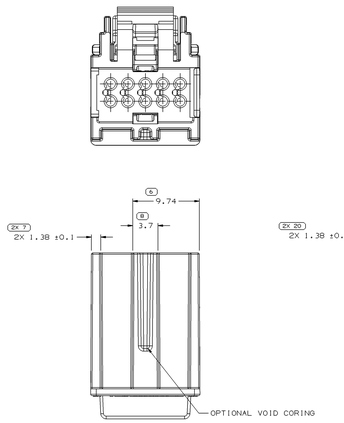

TYPE 102
SAME AS TYPE 101
EXCEPT AS SHOWN

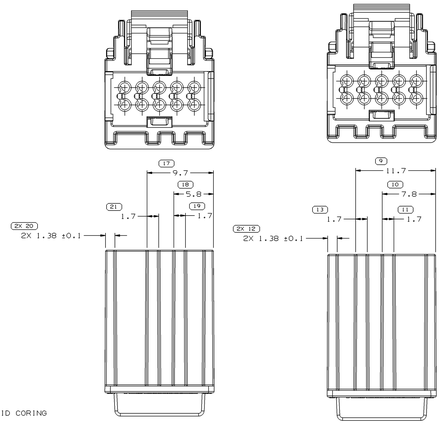

TYPE 103
SAME AS TYPE 101
EXCEPT AS SHOWN

TYPE 104
SAME AS TYPE 101
EXCEPT AS SHOWN

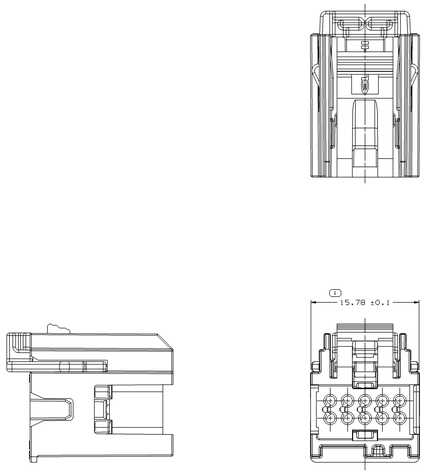

TYPE 101

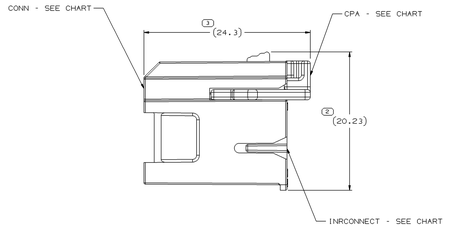

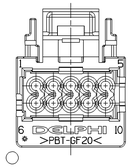

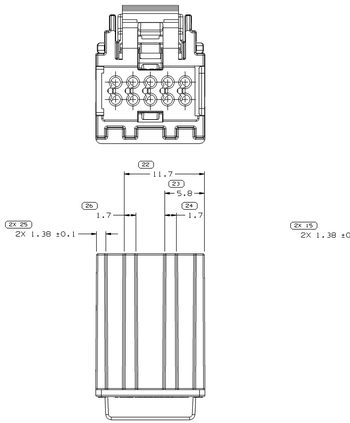

TYPE 105
SAME AS TYPE 101
EXCEPT AS SHOWN

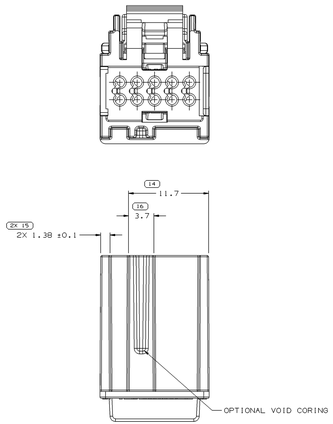

TYPE 106
SAME AS TYPE 101
EXCEPT AS SHOWN

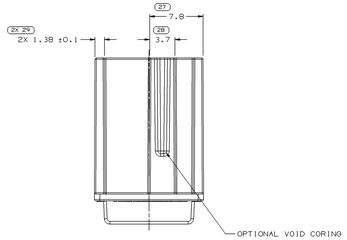

VIEW SCALE DOES NOT REFLECT
ACTUAL PART SIZE

PART NO	REV	N/P	STATUS	TYPE	USCAR TYPE	CONN	INRCONNECT	CPA
15431085	02	AA		106	F	13524387	15431118	15431117
15431084	02	AA		105	E	13524386	15431118	15431117
15431083	02	AA		104	D	13524385	15431118	15431117
15431082	02	AA		103	C	13524384	15431118	15431117
15431081	02	AA		102	B	13524383	15431118	15431117
15431080	02	AA		101	A	13524382	15431118	15431117

NOTES

1. UNLESS OTHERWISE SPECIFIED AND/OR INDICATED:

   DIMENSIONS ARE TO FACE OF VIEW SHOWN AND AUTOMATICALLY ROUNDED BY COMPUTER FOR INSPECTION. (SEE MATH MODEL FOR PRECISE DIMENSIONS.) FOR ALL OTHER DIMENSIONS NOT SHOWN BUT REQUIRED FOR TOOL BUILD, SEE MATH MODEL FOR PRECISE TOOL PATH DATA.

2. SEALING CODE O - UNSEALED
3. THIS PART ACCEPTS THE FOLLOWING COMPONENT OR EQUIVALENT:
   TERMINAL 15394147
   TPA 15433830
4. MAX INSULATION CRIMP MUST BE LESS Ø 2.
5. CPA INSERTION FORCE (SAE/USCAR-2 APRIL, 2001) WAS FOUND TO BE 9-15 NEWTONS.
6. REFERENCE MATING COMPONENTS OR EQUIVALENT:
   CONNECTOR 15417924

DRAWING NUMBER 15431079
SIZE A1x3 | SCALE 5:1 | FRAME NO (2 OF 2) | SHEET NO (1 OF 2) | STG R | REV 08 | N/P -

DWG TYPE: PART DRAWING
STYLE
VOLUME (CM³): SEE CHART
SYSTEM CODE

UNLESS OTHERWISE SPECIFIED
THIS DOCUMENT IS IN ACCORDANCE WITH ASME Y14.5M-1994 UNLESS OTHERWISE NOTED. DIMENSIONS AND TOLERANCING ACCORDING TO ISO. ALL GEOMETRIC TOLERANCES AND RELATED SYSTEMS APPLY UPTO, BUT NOT EXPECTED FOR 85 PERCENT OF THE PARTS. ALL DIMENSIONS AND TOLERANCES TO BE ACHIEVED BY INSPECTION OR EQUATION TOLERANCES. ALL DIMENSIONS ARE TO BE INSPECTED AT 20°C UNLESS OTHERWISE REQUIRED OF DATUM REFERENCE.
ALL DIMENSIONS ARE IN MILLIMETERS.

(N/A) PROCESS SENSITIVE DIMENSION
DIMENSIONS ENCLOSED IN A 3 INDICATE REFERENCE DIMENSIONS AND NO TOLERANCE LIMITS ARE ATTACHED.

REFERENCE

DIMENSIONAL RANGE (MM)

FROM	>0 TO 10	>10 TO 20	>20 TO 30	>30 TO 50	>50 TO 80	>80 TO 120	>120 TO 150	>150 TO 200	>200 TO 250	>250 TO 300	>300 TO 400
TO	10	20	30	50	80	120	150	200	250	300	400

TOLERANCE UNLESS OTHERWISE SPECIFIED
±0.15 | ±0.2 | ±0.25 | ±0.3 | ±0.4 | ±0.5 | ±0.6 | ±1 | ±1.2
ANGULAR TOLERANCE ±2°

THIRD ANGLE PROJECTION
DO NOT SCALE
USE MATH DATA

DELPHI
DELPHI PACKARD ELECTRIC SYSTEMS
WARREN, OH

		DATE
DR		
APVD1	JOSE HERED NOVOA	14MR02
APVD2	FCO. RESENDIZ	14MR02
APVD3	D. MCCLURE	15MR02
APVD4		
APVD5		

SUBSTANCES OF CONCERN: PVC RECYCLED CONTENT PER DELPHI (DW9100)

MATERIAL: SEE DRAWING

DRAWING NAME
TAXI ASM CONN 10 F MICRO 64 MODULAR

DRAWING NUMBER 15431079
SIZE A1x3 | SCALE 5:1 | FRAME NO (2 OF 2) | SHEET NO (1 OF 2) | STG R | REV 08 | N/P -

T24310V6