SYMBOL DEFINITION		
A DIMENSION WITHOUT AN INSPECTION REPORT SYMBOL (▭) DOES NOT REQUIRE INSPECTION. IT MAY BE CONTROLLED ON THE INDIVIDUAL COMPONENT DRAWING.	TOTAL NO OF INSPECTIONS REQUIRED	12
	LAST NO. USED	11

MISSING SYMBOLS
NO MISSING SYMBOL NUMBER

DWG STATUS					ZONE	REVISION HISTORY	AUTH	DR	APVD 1	APVD 2
DATE	STS	REV	INVP	CHG						
07AU06		01	-	-		RELEASED	283435	WDZ	JW	WDZ
28DEC06	R	01	AA			REDAWN TO PD	298246	WDZ	JMG	WDZ
02FEB08	R	02	-	-		MATERIAL WAS M3592012	403730	K.W	JMG	K.W
03JN06	R	02	AA	-		DIM #1 WAS 19.85+/-0.1 DIM #2 WAS 14.55+/-0.1 DIM #3 WAS 29+/-0.1 DIM #5 WAS 14.5+/-0.1 DIM #9 WAS 17.3+/-0.1 DIM #10 WAS 23+/-0.1	404913	K.W	JMG	K.W
02JL08	R	02	AB	-		RELAXED TOLERANCES DIM 23 +0.35/-0.1 WAS 23 +/-0.25 DIM 19.85 +0.1/-0.5 WAS 19.85 +/-0.2	405331	ASN	ASN	ASN

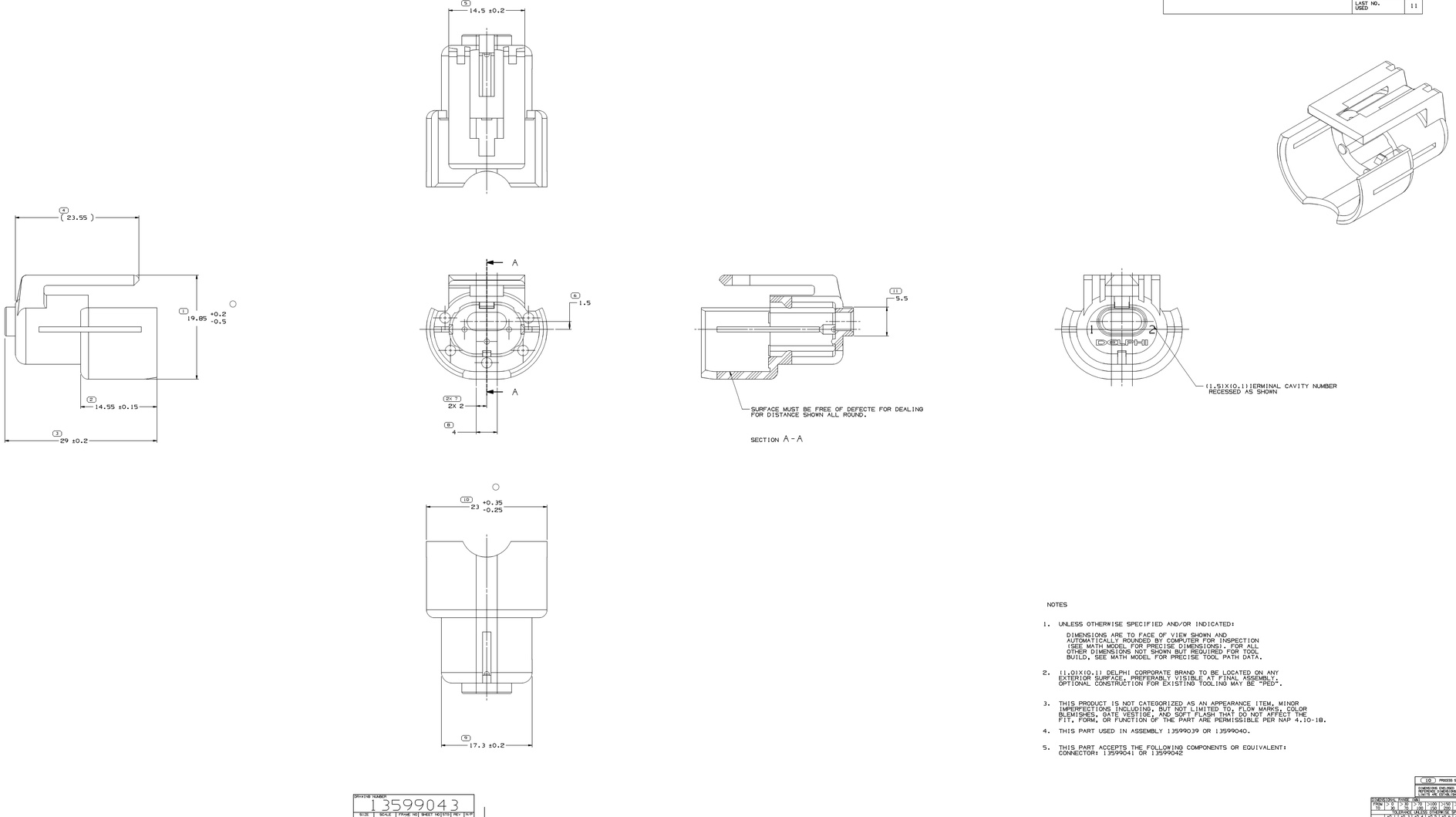

NOTES

1. UNLESS OTHERWISE SPECIFIED AND/OR INDICATED:

   DIMENSIONS ARE TO FACE OF VIEW SHOWN AND AUTOMATICALLY ROUNDED BY COMPUTER FOR INSPECTION (SEE MATH MODEL FOR PRECISE DIMENSIONS). FOR ALL OTHER DIMENSIONS NOT SHOWN BUT REQUIRED FOR TOOL BUILD, SEE MATH MODEL FOR PRECISE TOOL PATH DATA.

2. (1.01X(0.1) DELPHI CORPORATE BRAND TO BE LOCATED ON ANY EXTERIOR SURFACE, PREFERABLY VISIBLE AT FINAL ASSEMBLY. OPTIONAL CONSTRUCTION FOR EXISTING TOOLING MAY BE "PED".

3. THIS PRODUCT IS NOT CATEGORIZED AS AN APPEARANCE ITEM. MINOR IMPERFECTIONS INCLUDING, BUT NOT LIMITED TO, FLOW MARKS, COLOR BLEMISHES, GATE VESTIGE, AND SOFT FLASH THAT DO NOT AFFECT THE FIT, FORM, OR FUNCTION OF THE PART ARE PERMISSIBLE PER NAP 4.10-18.

4. THIS PART USED IN ASSEMBLY 13599039 OR 13599040.

5. THIS PART ACCEPTS THE FOLLOWING COMPONENTS OR EQUIVALENT: CONNECTOR: 13599041 OR 13599042

DRAWING NUMBER						
13599043						
SIZE	SCALE	TOTAL SHEETS	SHEET NO	STATUS	REV	INVP
A1x3	5:1	2 OF 2	1 OF 1	R	02	AB

(10) PROCESS SENSITIVE DIMENSION

DIMENSIONS ENCLOSED IN ( ) INDICATE REFERENCE DIMENSIONS, NO AS TOLERANCE LIMITS ARE ESTABLISHED

| DIMENSIONAL TOLERANCE UNLESS OTHERWISE SPECIFIED | | | | | |