PART NUMBER	ITEM 1 BODY	ITEM 2 CONTACT (ONE PIECE)	ITEM 3 BODY INSULATOR	ITEM 4 LOCKWASHER	ITEM 5 NUT	ITEM 6 BASE	ITEM 7 BASE INSULATOR	PACKAGING
142-0711-511	BRASS GOLD PL .00001 MIN OVER NICKEL PL .0001 MIN OVER COPPER PL .00005 MIN	BERYLLIUM COPPER GOLD PL .00003 MIN OVER NICKEL PL .00005 MIN OVER COPPER PL .00005 MIN	TEFLON	BRONZE GOLD PL .00001 MIN OVER NICKEL PL .0001 MIN OVER COPPER PL .00005 MIN	BRASS GOLD PL .00001 MIN OVER NICKEL PL .0001 MIN OVER COPPER PL .00005 MIN	BRASS GOLD PL .00001 MIN OVER NICKEL PL .0001 MIN OVER COPPER PL .00005 MIN	TEFLON	25 PIECES PER BAG
142-0711-512	BRASS GOLD PL .00001 MIN OVER NICKEL PL .0001 MIN OVER COPPER PL .00005 MIN	BERYLLIUM COPPER GOLD PL .00003 MIN OVER NICKEL PL .00005 MIN OVER COPPER PL .00005 MIN	TEFLON	BRONZE GOLD PL .00001 MIN OVER NICKEL PL .0001 MIN OVER COPPER PL .00005 MIN	BRASS GOLD PL .00001 MIN OVER NICKEL PL .0001 MIN OVER COPPER PL .00005 MIN	BRASS GOLD PL .00001 MIN OVER NICKEL PL .0001 MIN OVER COPPER PL .00005 MIN	TEFLON	TAPE AND REEL 250 PIECES PER FIG 1

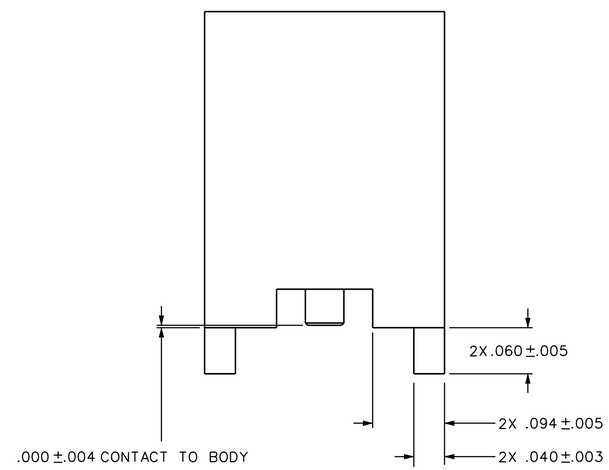

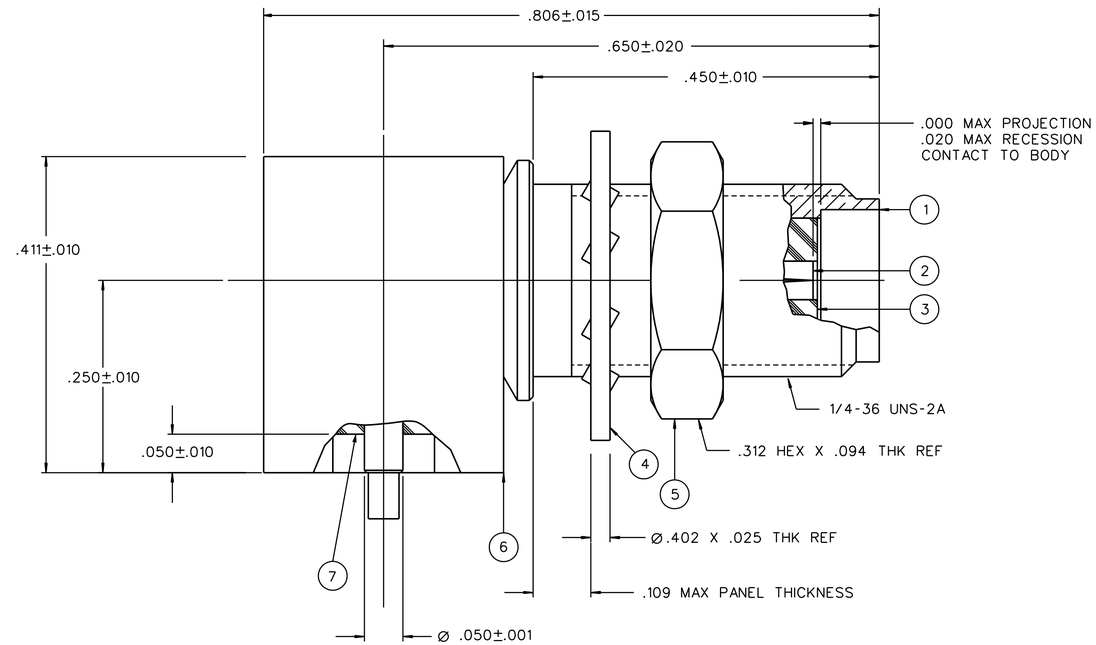

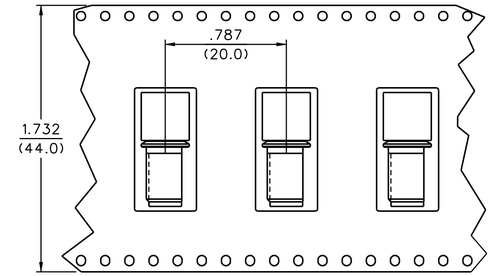

FIG 1
2:1

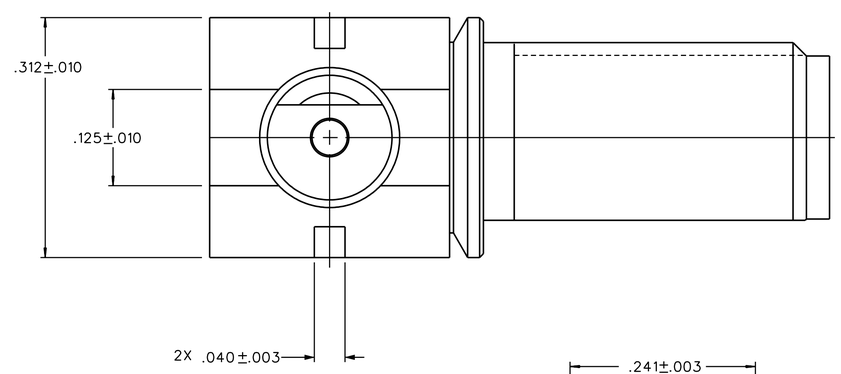

RECOMMENDED LAND PATTERN*

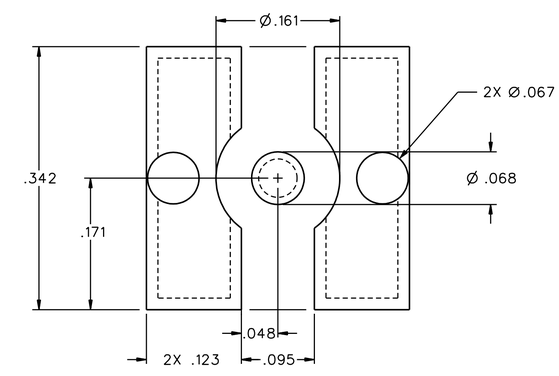

* NOTE: THIS PATTERN IS FOR REFERENCE ONLY.

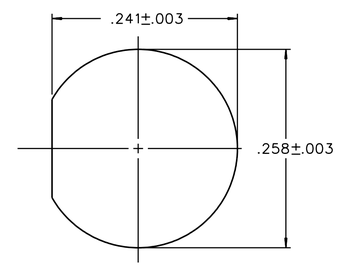

MOUNTING HOLE

NOTES:

1. SPECIFICATIONS:

IMPEDANCE: 50 OHMS
FREQUENCY RANGE: 0-18 GHZ
VSWR: NOT APPLICABLE
WORKING VOLTAGE: 335 VRMS MAX AT SEA LEVEL
DIELECTRIC WITHSTANDING VOLTAGE: 1000 VRMS MIN AT SEA LEVEL
INSULATION RESISTANCE: 5000 MEGOHM MIN
CONTACT RESISTANCE:
CENTER CONTACT - INITIAL 3.0 MILLIOHM MAX, AFTER ENVIRONMENTAL 4.0 MILLIOHM MAX
OUTER CONDUCTOR - INITIAL 2.0 MILLIOHM MAX AFTER ENVIRONMENTAL NOT APPLICABLE
BRAID TO BODY - NOT APPLICABLE
CORONA LEVEL: 250 VOLTS MIN AT 70,000 FEET
INSERTION LOSS: NOT APPLICABLE
RF LEAKAGE: NOT APPLICABLE
RF HIGH POTENTIAL WITHSTANDING VOLTAGE: 670 VRMS AT 4 AND 7 MHZ MIN

MECHANICAL:

ENGAGE/DISENGAGE TORQUE: 2 INCH-POUNDS MAX
MATING TORQUE: 7-10 INCH POUNDS
COUPLING PROOF TORQUE: NOT APPLICABLE
COUPLING NUT RETENTION: NOT APPLICABLE
CONTACT RETENTION: 6 LBS MIN AXIAL FORCE
CABLE ACCEPTABILITY: NOT APPLICABLE
CABLE HEX CRIMP SIZE: NOT APPLICABLE
CABLE RETENTION: NOT APPLICABLE
DURABILITY: 500 CYCLES MIN

ENVIRONMENTAL:

(MEETS OR EXCEEDS THE APPLICABLE PARAGRAPH OF MIL-PRF-39012)
THERMAL SHOCK: MIL-STD-202, METHOD 107, CONDITION B
OPERATING TEMPERATURE: -65 DEG C TO 165 DEG C
CORROSION: MIL-STD-202, METHOD 101, CONDITION B
SHOCK: MIL-STD-202, METHOD 213, CONDITION I
VIBRATION: MIL-STD-202, METHOD 204, CONDITION D
MOISTURE RESISTANCE: MIL STD 202, METHOD 106

DRAWING NO. D-142-0711-511/520

0	REVISIONS		
ENGINEERING RELEASE			
1	9-3-99	RJB HJB	ECN 46696
ADDED: BODY, BASE, LOCK PREFIXES. .094 WAS .063, .025 WAS .032, .109 WAS .125. UPDATED VIEWS.			
2	6-4-01	RJB	2-23-05 ECN 47951
ADD DIA .402 X .250 THK REF WAS .250 THK REF			
* REVISION NUMBER FOLLOWED BY AN ALPHA * CHARACTER INDICATES DRAWING CLARIFI- CATION OR PART NUMBER ADDITION ONLY. *			
2a	3-20-08	PAT CSM RJB MJU JCN	3-28-08 ECN 51436
ADDED 142-0711-512 AND ADDED TAPE AND REEL DETAIL			
* REVISION NUMBER FOLLOWED BY AN ALPHA * CHARACTER INDICATES DRAWING CLARIFI- CATION OR PART NUMBER ADDITION ONLY. *			
2b	7-25-11	CWW BF RJB MJU	7-25-11 ECO 53521

CUSTOMER DRAWING

THIS DRAWING TO BE INTERPRETED PER ANSI Y 14.5M - 1982

"μSTATION"

COMPANY CONFIDENTIAL

TOLERANCE UNLESS OTHERWISE SPECIFIED		DRAWN BY RJB	DATE 8-24-99	EMERSON. Network Power — Connectivity Solutions, P.O. Box 1732, Waseca, MN 56093, 1-800-247-8256
DECIMALS .XX	mm	CHECKED BY	DATE	TITLE JACK ASSEMBLY RA PC SURFACE MOUNT, BULKHEAD, SMA
.XXX		APPROVED BY RJB	DATE 9-10-99	
MATL		RELEASE DATE	9-10-99	SHEET 2 OF 2 — DRAWING NO. D-142-0711-511/520
FINISH		U/M INCH	SCALE 10:1	