MODEL NO.	PACKAGING
145-0701-202	ONE PCS PER BAG

REV	ECO	DATE
001	ECO-19-0022	06/26/2019

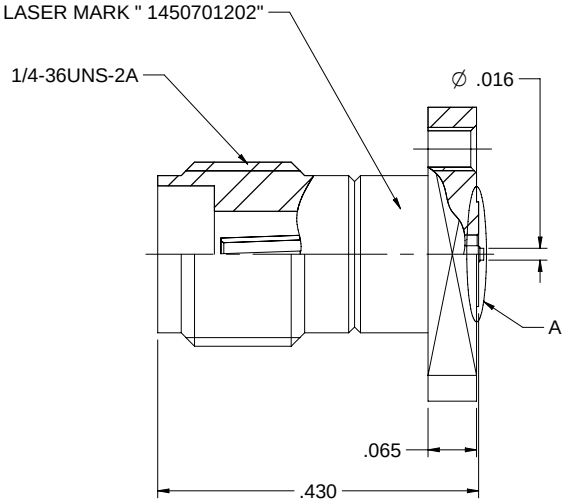

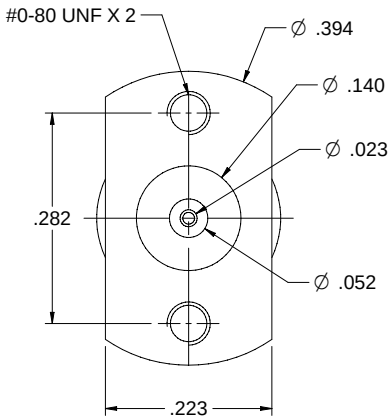

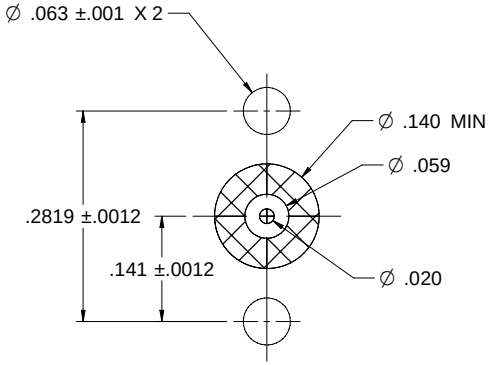

RECOMMENDED MOUNTING PATTERN

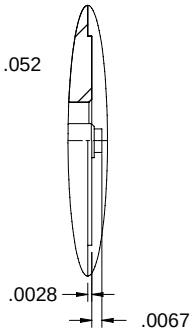

DETAIL A (10/1)

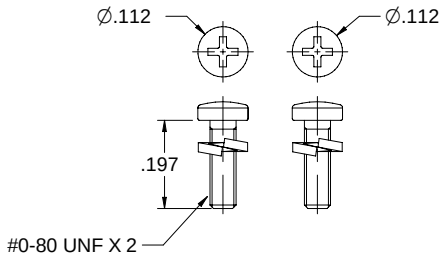

1. BOARD THICKNESS: 1.57-2.79mm

NOTES: UNLESS OTHERWISE SPECIFIED

1. MATERIAL & FINISH:
   1.1 BODY: PASSIVATED STAINLESS STEEL
   1.2 CONTACT PIN: GOLD PLATED BERYLLIUM COPPER
   1.3 INSULATOR: PTFE, WHITE
   1.4 WASHER: STAINLESS STEEL
   1.5 BOLT: SUS302

2. ELECTRICAL:
   2.1 IMPEDANCE: 50 OHMS
   2.2 FREQUENCY RANGE: DC-40 GHz
   2.3 VOLTAGE STANDING WAVE RATIO: 1.35 MAX
   2.4 DIELECTRIC WITHSTANDING VOLTAGE: 750 VRMS MIN
   2.5 CONTACT RESISTANCE:
      2.5.1 CENTER CONTACT: 3 MILLIOHMS MAX
      2.5.2 OUTER CONTACT: 2 MILLIOHMS MAX
   2.6 INSULATOR RESISTANCE: 5000 MEGOHM MIN

3. MECHANICAL:
   3.1 ENGAGEMENT AND DISENGAGEMENT FORCE: 0.23 MN MAX
   3.2 CONTACT RETENTION: 22 N MIN
   3.3 DURABILITY: 500CYCLES MIN

4. ENVIRONMENT:
   4.1 OPERATING TEMPERATURE: -55 TO 125°C
   4.2 THERMAL SHOCK: MIL-STD-202, METHOD 107, CONDITION B.
   4.3 SHOCK: MIL-STD-202, METHOD 213, CONDITION I
   4.4 VIBRATION: MIL-STD-202, METHOD 204, CONDITION D
   4.5 MOISTURE RESISTANCE: MIL-STD-202, METHOD 106
   4.6 SALT SPRAY: MIL-STD-202, METHOD 101, CONDITION B

cinch
This PROPRIETARY Document is property of Cinch Connectivity Solutions. Any reproduction or disclosure of this document without the prior written consent of Cinch Connectivity Solutions is prohibited. Unless otherwise stated, the information contained herein is not to be used in connection with any manufacture or sale.
INTERPRET DRAWING IN ACCORDANCE WITH ASME Y14.5-2009.

Model No. 145-0701-201/210		Johnson	
RoHS2 ☑ 2011/65/EU	Cage Code	Title: JACK, PCB, COMPRESSION MOUNT,2.92mm (SMK)	
UNLESS OTHERWISE SPECIFIED DIMS INCH .XXX ±.02 .XXXX ±.01 ANGLES ±5°	3RD ANGLE PROJECTION	Drawing No. 145-0701-201/210	Rev. 001
	Drawn By: Betty.Yu		
	Date: 06/26/2019	Size C / DO NOT SCALE DRAWING	Workmanship Std: NONE / Sheet 1 of 1