MODEL NO.	PACKAGING
145-0701-881	ONE PCS PER BAG

REV	ECO	DATE
001	ECO-19-0019	05/31/2019

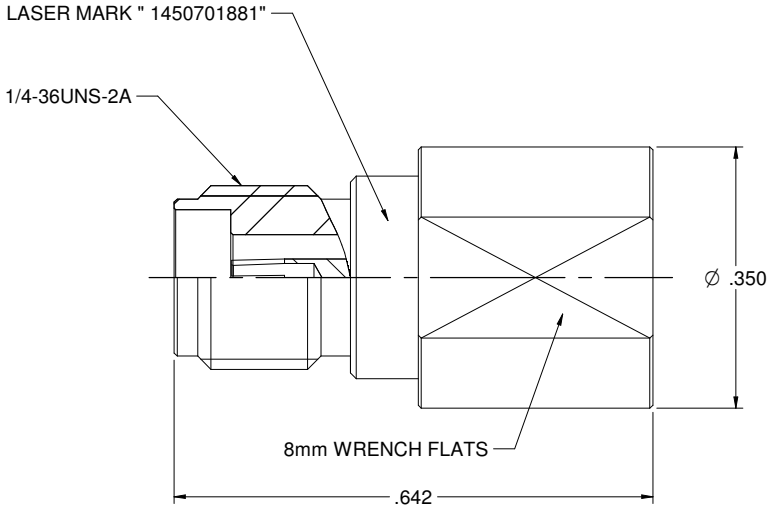

NOTES: UNLESS OTHERWISE SPECIFIED

1. MATERIAL & FINISH:
   1.1 BODY: PASSIVATED STAINLESS STEEL
   1.2 INNER BODY: GOLD PLATED BRASS
   1.3 CONTACT PIN: GOLD PLATED BERYLLIUM COPPER
   1.4 INSULATOR: PEEK, NATURAL
   1.5 RESITOR: 50 OHMS +/- 1% 1/4W

2. ELECTRICAL:
   2.1 IMPEDANCE: 50 OHMS
   2.2 FREQUENCY RANGE: DC-40 GHz
   2.3 RETURN LOSS: -20DB MAX
   2.4 DIELECTRIC WITHSTANDING VOLTAGE: 750 VRMS MIN
   2.5 CONTACT RESISTANCE:
      2.5.1 CENTER CONTACT: 3 MILLIOHMS MAX
      2.5.2 OUTER CONTACT: 2 MILLIOHMS MAX
   2.6 INSULATOR RESISTANCE: 5000 MEGOHM MIN
   2.7 WORKING VOLTAGE: 250 VRMS MAX

3. MECHANICAL:
   3.1 ENGAGEMENT AND DISENGAGEMENT FORCE: 0.23 MN MAX
   3.2 COUPLING TORQUE RECOMMENDED: 0.8 NM TO 1.1 NM
   3.3 COUPLING TORQUE PROOF: 1.7 NM
   3.4 CONTACT RETENTION: 22 N MIN
   3.5 DURABILITY: 500CYCLES MIN

4. ENVIRONMENT:
   4.1 OPERATING TEMPERATURE: -55 TO 125℃
   4.2 THERMAL SHOCK: MIL-STD-202, METHOD 107, CONDITION B.
   4.3 SHOCK: MIL-STD-202, METHOD 213, CONDITION I
   4.4 VIBRATION: MIL-STD-202, METHOD 204, CONDITION D
   4.5 MOISTURE RESISTANCE: MIL-STD-202, METHOD 106
   4.6 SALT SPRAY: MIL-STD-202, METHOD 101, CONDITION B

cinch	Model No. 145-0701-881/890		Johnson
	RoHS2 2011/65/EU	Cage Code	Title: 2.92mm (SMK) TERMINATOR W/O CHAIN JACK (50 OHMS+/-1 %,1/4W)
	UNLESS OTHERWISE SPECIFIED UNITS INCH .XXX ±.02 .XXXX ±.01 ANGLES ±5°	3RD ANGLE PROJECTION	Drawing No. 145-0701-881/890 Rev. 001
		Drawn by: Betty.Yu	
		Date: 05/31/2019	Size C DO NOT SCALE DRAWING Workmanship Std. NONE Sheet 1 of 1