| MODEL NO. | PACKAGING |
|---|---|
| 145-0711-802 | ONE PCS PER BAG |

| REV | ECO | DATE |
|---|---|---|
| 001 | ECO-19-0024 | 07/05/2019 |

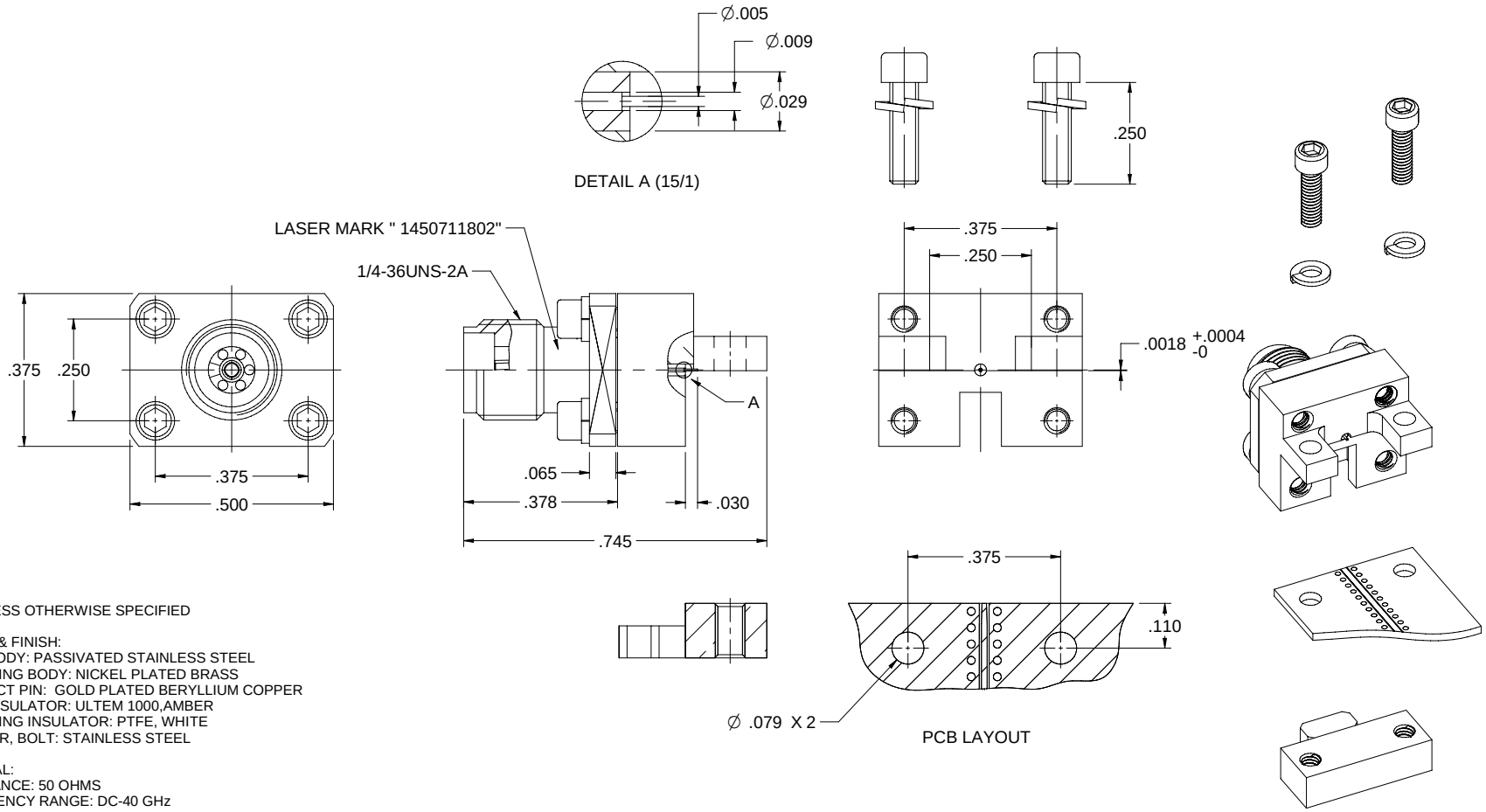


NOTES: UNLESS OTHERWISE SPECIFIED

1. MATERIAL & FINISH:
   1.1 MAIN BODY: PASSIVATED STAINLESS STEEL
   1.2 MOUNTING BODY: NICKEL PLATED BRASS
   1.3 CONTACT PIN: GOLD PLATED BERYLLIUM COPPER
   1.4 MAIN INSULATOR: ULTEM 1000,AMBER
   1.5 MOUNTING INSULATOR: PTFE, WHITE
   1.6 WASHER, BOLT: STAINLESS STEEL

2. ELECTRICAL:
   2.1 IMPEDANCE: 50 OHMS
   2.2 FREQUENCY RANGE: DC-40 GHz
   2.3 VOLTAGE STANDING WAVE RATIO: 1.2 MAX
   2.4 DIELECTRIC WITHSTANDING VOLTAGE: 750 VRMS MIN
   2.5 CONTACT RESISTANCE:
      2.5.1 CENTER CONTACT: 3 MILLIOHMS MAX
      2.5.2 OUTER CONTACT: 2 MILLIOHMS MAX

3. MECHANICAL:
   3.1 DURABILITY: 500CYCLES MIN

4. ENVIRONMENT:
   4.1 OPERATING TEMPERATURE: -55 TO 125°C
   4.2 THERMAL SHOCK: MIL-STD-202, METHOD 107, CONDITION B.
   4.3 SHOCK: MIL-STD-202, METHOD 213, CONDITION I
   4.4 VIBRATION: MIL-STD-202, METHOD 204, CONDITION D
   4.5 MOISTURE RESISTANCE: MIL-STD-202, METHOD 106
   4.6 SALT SPRAY: MIL-STD-202, METHOD 101, CONDITION B


cinch
This PROPRIETARY Document is property of Cinch Connectivity Solutions. Unauthorized use, reproduction, and distribution is prohibited. Without limiting the rights of the copyright owner, the recipient of this document is not permitted to copy or reproduce the information contained herein.
INTERPRET DRAWING IN ACCORDANCE WITH ASME Y14.5-2009.


| | | | |
|---|---|---|---|
| Model No. 145-0711-801/810 | | Johnson | |
| RoHS2 2011/65/EU | Cage Code | Title: END LAUNCH JACK SCREW-ON TYPE LOW PROFILE 2.92mm(SMK). 0.005" PIN | |
| UNLESS OTHERWISE SPECIFIED UNITS: INCH | 3RD ANGLE PROJECTION | Drawing No. 145-0711-801/810 | Rev. 001 |
| .XXX ±.02 .XXXX ±.01 ANGLES ±5° | Drawn by: Betty.Yu | | |
| | Date: 07/05/2019 | Size C / DO NOT SCALE DRAWING / Workmanship Std NONE | Sheet 1 of 1 |