PART NUMBER	ITEM ① MAIN BODY	ITEM ② MOUNTING BODY	ITEM ③ CONTACT	ITEM ④ INSULATOR	ITEM ⑤ BOLT X 2	ITEM ⑥ WASHER X 2
145-0801-802	STAINLESS STEEL PASSIVATED	BRASS NICKEL PL.00007 MIN OVER COPPER STRIKE	BERYLLIUM COPPER GOLD PL .00004 MIN(MATING END) / .00003 MIN(SOLDER END) OVER NICKEL PL.00005 MIN OVER COPPER PL.00005 MIN	ULTEM 1000 (MATING END) /TEFLON (SOLDER END)	STAINLESS STEEL	STAINLESS STEEL

REV	ECO	DATE
1	ECO-17-0010	4/10/2017

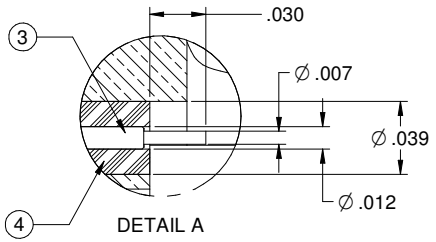

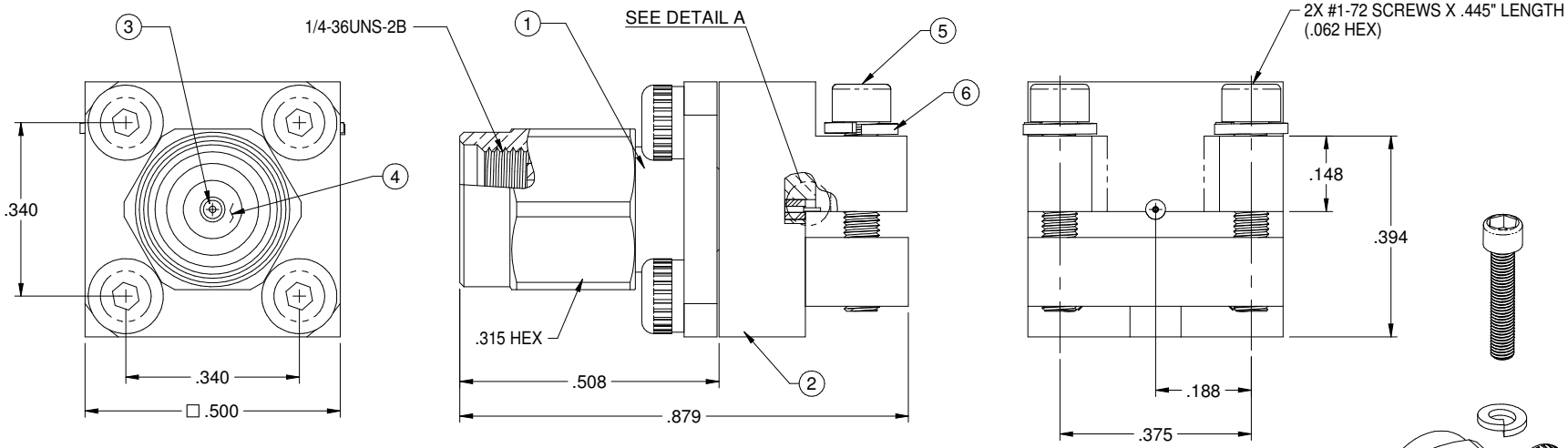

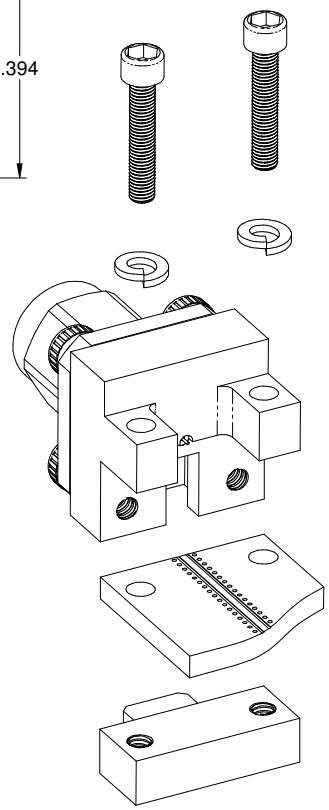

SPECIFICATION:

ELECTRICAL:
- IMPEDANCE: 50 OHMS
- FREQUENCY RANGE: 0-40 GHz
- VSWR: DEPENDANT ON APPLICATION
- WORKING VOLTAGE: 250 VRMS MAX AT SEA LEVEL
- DIELECTRIC WITHSTANDING VOLTAGE: 750 VRMS MIN AT SEA LEVEL
- INSULATION RESISTANCE: 5000 MEGOHM MIN
- CONTACT RESISTANCE:
  - CENTER CONTACT - INITIAL 3 MILLIOHM MAX, AFTER ENVIRONMENTAL NOT APPLICABLE
  - OUTER CONDUCTOR - INITIAL 2 MILLIOHM MAX, AFTER ENVIRONMENTAL NOT APPLICABLE
- RF LEAKAGE: -90dB TYPICAL AT 2.5GHz

MECHANICAL:
- ENGAGEMENT/DISENGAGEMENT FORCE: 2 INCH-POUNDS MAX
- CONTACT RETENTION: 6 LBS MIN AXIAL FORCE
- MATING TORQUE: 7 TO 10 INCH-POUNDS
- DURABILITY: 500 CYCLES MIN

ENVIRONMENTAL:
- OPERATING TEMPERATUR: -40 TO 85℃
- THERMAL SHOCK: MIL-STD-202, METHOD 107, CONDITION B
- CORROSION: MIL-STD-202, METHOD 101, CONDITION B
- SHOCK: MIL-STD-202, METHOD 213, CONDITION I
- VIBRATION: MIL-STD-202, METHOD 204, CONDITION D
- MOISTURE RESISTANCE: MIL-STD-202, MEHTOD 106

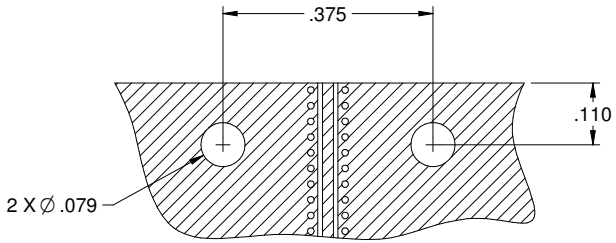

RECOMMENDED PCB LAYOUT

NOTE: THIS PATTERN IS FOR REFERENCE ONLY.
PATTERN MAY VARY DEPENDING ON BOARD TYPE, SPECIFIC ELECTRICAL OR MECHANICAL REQUIREMENTS.

cinch
This PROPRIETARY Document is property of Cinch Connectivity Solutions. Any reproduction or retransmission of this document without written permission from the Cinch Connectivity Solutions Inc. is prohibited. Unauthorized use of this document or any information contained herein is prohibited.
INTERPRET DRAWING IN ACCORDANCE WITH ASME Y14.5-2009.

Material: SEE NOTE	Model No. RoHS2 ☑ 2011/65/EU	Cage Code	Title: END LAUNCH PLUG SCREW-ON TYPE SMK(2.92mm)
Finish: SEE NOTE	UNLESS OTHERWISE SPECIFIED DIMS ±0.5 .XX ±.02 .XXX ±.005 ANGLES ±2 DEG	3RD ANGLE PROJECTION	Drawing No. 145-0801-802 Rev. 1
Workmanship Std:		Drawn by: R.SHEN	
		Date: 4/10/17	Size C DO NOT SCALE DRAWING Sheet 1 of 1