DO NOT SCALE

PART NO 1535 4771

SYMBOL DEFINITION			MISSING NUMBERS
THE NUMBER INSIDE THE SYMBOL ( ) CORRESPONDS TO THE NUMBER ON THE INSPECTION REPORT FOR THIS DRAWING/PART NUMBER	TOTAL NO. OF SYMBOLS ON DRAWING	11	
	LAST NO. USED	11	

DATE	SYM	REVISION RECORD	AUTH	DR	CK
01AP98	A	RELEASED	9B0005	MAC	MAC

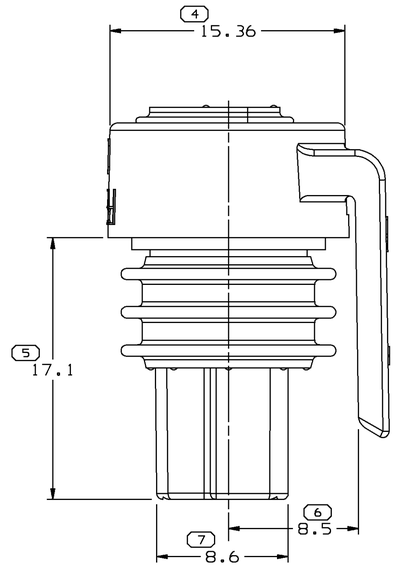

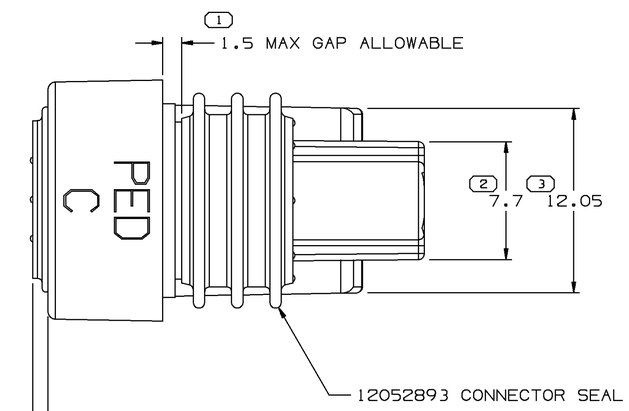

CABLE SEAL MAY EXTEND 1.0 MAX (EXCLUDING ANTI-STICK BUMP) BEYOND CONNECTOR, PRIOR TO FINAL LEAD ASM.

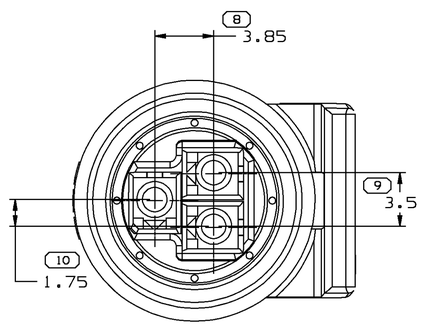

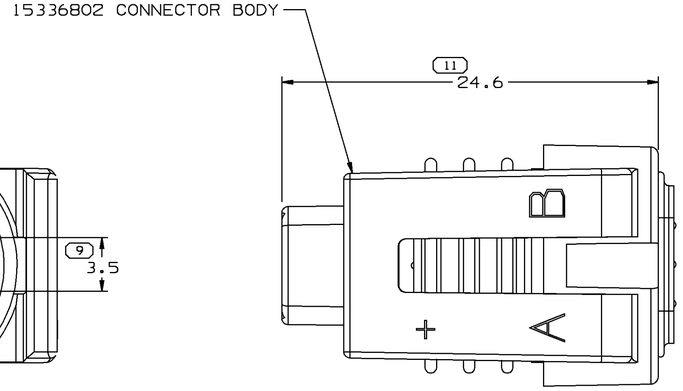

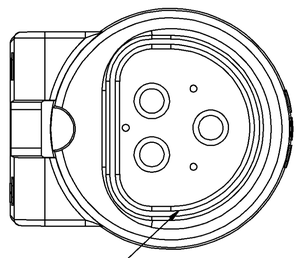

12065285 CABLE SEAL

PART NO 1535 4771

NOTES

1. UNLESS OTHERWISE SPECIFIED AND/OR INDICATED: DIMENSIONS ARE TO FACE OF VIEW SHOWN AND AUTOMATICALLY ROUNDED BY COMPUTER FOR INSPECTION. (SEE MATH MODEL FOR PRECISE DIMENSIONS.) FOR ALL OTHER DIMENSIONS NOT SHOWN BUT REQUIRED FOR TOOL BUILD, SEE MATH MODEL FOR PRECISE TOOL PATH DATA.
2. WHEN PARTS ARE SHIPPED THEY MUST BE PACKED IN PLASTIC BAGS OR SHIPPING CONTAINERS MUST BE LINED WITH PLASTIC LINERS. BAGS OR LINERS MUST BE SEALED TO AVOID FOREIGN MATTER.
3. SEALING CODE 3
4. CAVITIES TO ACCEPT 12047680 TERMINAL OR EQUIVALENT.
5. MATING PART 15354902 OR EQUIVALENT
6. ENGAGE FORCE CODE IS XXX

THE DIMENSION NUMBER(S) SHOWN BELOW INDICATE DIMENSIONS THAT ARE PROCESS SENSITIVE FOR PART PRODUCTION

1		

DIMENSIONS ENCLOSED IN ( ) INDICATE REFERENCE DIMENSIONS AND NO TOLERANCE LIMITS ARE ESTABLISHED

DIMENSIONAL RANGE					
FROM	0	> 20	> 30	> 70	> 100
TO	20	30	70	100	
TOLERANCE UNLESS OTHERWISE SPECIFIED					
±0.15	±0.2	±0.3	±0.4	±0.5	
ANGULAR TOLERANCE ± 2°					

PART DRAWING

Unigraphics

THIRD ANGLE PROJECTION

CODE NO 6900 | QC

DWG DATE 01AP98

METRIC
DIMENSIONS ARE IN MILLIMETERS UNLESS OTHERWISE SPECIFIED

SCALE 5:1

DES

REFERENCE NO 001

DRM. CHRESTAY 01AP98

CKM. CHRESTAY 01AP98

APPR

VOL CM³

MATERIAL SPEC SEE DRAWING

NAME ASM CONN 3F M/P 150 P2S

PART NUMBER 1535 4771

SIZE A1

DELPHI PACKARD ELECTRIC SYSTEMS
WARREN, OHIO 44486
410 44486