SYMBOL DEFINITION		MISSING NUMBERS
A DIMENSION WITHOUT AN INSPECTION REPORT SYMBOL ( ) DOES NOT REQUIRE INSPECTION. IT MAY BE CONTROLLED ON AN INDIVIDUAL COMPONENT DRAWING.	TOTAL NO. SYMBOLS ON DRAWING 6	
	LAST NO. USED 6	

DWG STATUS					ZONE	REVISION HISTORY	AUTH	DR	APVD	APVD
DATE	STS	REV	N/P	DAS					1	2
07JA00	R	01	-	-	-	15373518 - TAXI CREATED, 15758810 - PART RELEASED.	000005	JEB	JEB	ET
07JA00	R	02	-	-	-	12020933 - ADDED TO TAXI	198044	JEB	JEB	ET
30JN03	R	03	-	-	-	ALL PARTS - ADDED OPTIONAL CONSTRUCTION AND REVISED MAT'L SPEC	242980	RYP	RVP	FR
23JL03	R	04	-	-	-	ALL PARTS - REVISED OPT CONSTRUCTION GRAPHICS	243845	EDV	EDV	FR

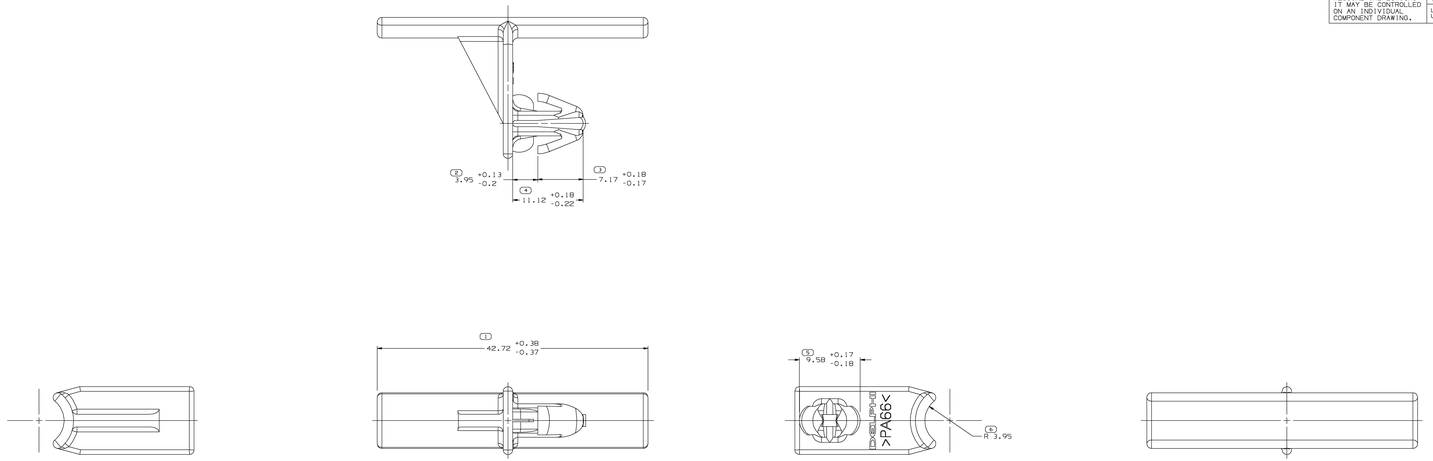

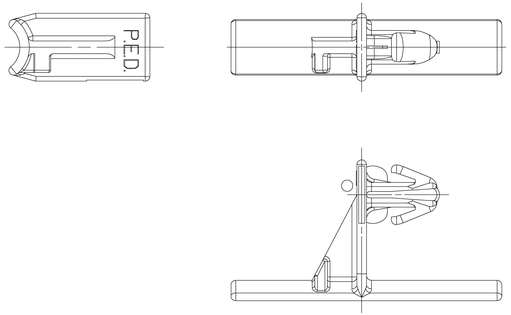

OPTIONAL CONSTRUCTION

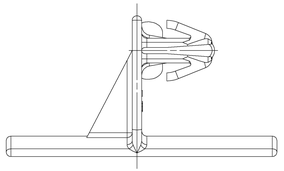

NOTES

1. UNLESS OTHERWISE SPECIFIED AND/OR INDICATED:
   DIMENSIONS ARE TO FACE OF VIEW SHOWN AND AUTOMATICALLY ROUNDED BY COMPUTER FOR INSPECTION (SEE MATH MODEL FOR PRECISE DIMENSIONS). FOR ALL OTHER DIMENSIONS NOT SHOWN BUT REQUIRED FOR TOOL BUILD, SEE MATH MODEL FOR PRECISE TOOL PATH DATA.
2. CLIP TO SNAP INTO Ø5.85/6.85 HOLE IN 0.9/2.25 THICK STOCK.
3. MATERIAL RECYCLING CODE >PA66< PER SAE J1344. (2.31X10.1) RAISED CHARACTERS AS SHOWN TO BE LOCATED ON ANY EXTERIOR SURFACE. OPTIONAL CONSTRUCTION TO BE NO MATERIAL RECYCLING CODE.
4. THIS PART IS NOT CONTROLLED FOR AUTOMATIC FEEDING.
5. (2.31X10.1) RAISED DELPHI CORPORATE BRAND TO BE LOCATED ON ANY EXTERIOR SURFACE. PREFERABLY VISIBLE AT FINAL ASSEMBLY. OPTIONAL CONSTRUCTION TO BE "PED" OR NO LOGO.

15758810	01	AB		M592008 PA66 HS IM BLU	1.222
12020933	C1	-		M592001 PA66 HS IM BLK	1.222
PART NO	REV	N/P	STATUS	MATERIAL SPECIFICATION AND COLOR	VOL CM³

R 0.2 MAX — SHARP CORNER TOLERANCE

DIMENSIONS RANGE (MM)							
ITEM	0	>.5	>3	>6	>10	>30	>100
TOL	±.5	±.25	±.1	±.05	±.03	±.02	±.01

DIMENSIONS ENCLOSED IN ( ) INDICATE REFERENCE DIMENSIONS. NO TOLERANCE LIMITS ARE SPECIFIED.

GENERAL TOLERANCE SPECIFICATION	
UNLESS OTHERWISE SPECIFIED	
LINEAR	±0.05
ANGULAR	±0.5°

1	PROCESS SENSITIVE DIMENSION
	REFERENCE

THIRD ANGLE PROJECTION

DO NOT SCALE

USE MATH DATA

DELPHI

DELPHI PACKARD ELECTRIC SYSTEMS
WARREN, OH

DWG TYPE	PART DRAWING
STYLE	
VOLUME CODE	SEE CHART
SYSTEM CODE	D
ROUTING	6900

UNLESS OTHERWISE SPECIFIED

THIS DOCUMENT IS IN ACCORDANCE WITH ANSI Y14.5M-1994 AS MODIFIED BY THE DELPHI DIMENSIONING GUIDELINES. THIS DOCUMENT IS THE PROPERTY OF DELPHI PACKARD ELECTRIC SYSTEMS. ANY USE OTHER THAN THE PURPOSE FOR WHICH IT WAS LOANED OR PROVIDED IS PROHIBITED.

ALL DIMENSIONS ARE IN MILLIMETERS

		DATE
DR		
APVD1	J. BANKSTON	07JA99
APVD2	J. BANKSTON	07JA00
APVD3	E. TRACEY	11JA99
APVD4		
APVD5		

SUBSTANCES OF CONCERN AND RECYCLED CONTENT PER DELPHI J2640001

MATERIAL: SEE CHART

DRAWING NAME: TAXI CLIP HARNESS

DRAWING NUMBER: 15373518

SIZE	SCALE	FRAME NO	SHEET NO	STS	REV	N/P
A1x3	511	2 OF 2	1 OF 1	R	04	-

DRAWING NUMBER					
15373518					
SIZE	SCALE	FRAME NO	SHEET NO	STS	REV	N/P
A1x3	511	2 OF 2	1 OF 1	R	04	-

Dwn: LETAMAN Part: 15373518-C0001-001 Date: 23-Jul-03 Time: 14:18 Wwwxxx

T23\32I8