SYMBOL DEFINITION		
A DIMENSION WITHOUT AN INSPECTION REPORT SYMBOL (□) DOES NOT REQUIRE INSPECTION. IT MAY BE CONTROLLED ON THE INDIVIDUAL COMPONENT DRAWING.	TOTAL NO OF INSPECTIONS REQUIRED	153
	LAST NO. USED	31

MISSING SYMBOLS

NO MISSING SYMBOL NUMBER

DWG STATUS					ZONE	REVISION HISTORY	AUTH	DR	APVD	APVD 2
DATE	SYS	REV	N/P	CHG						
16NOV04	R	01	-	-		15405472 - WAS SEPARATE DWG: 13512003 - RELEASED	26OCT99	EGR	EGR	HV
						ALL PARTS - ADDED OPTIONAL CONSTRUCTION				264894

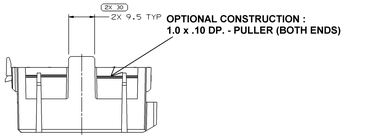

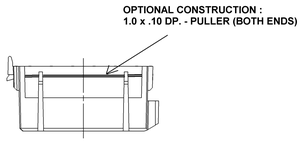

TEMPORARY PRODUCTION PRINT

See electronic approvals of ECN

Change Notice Number: 264894

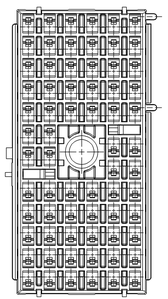

TYPE 102
SAME AS TYPE 101
EXCEPT AS SHOWN

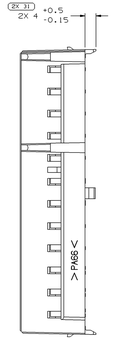

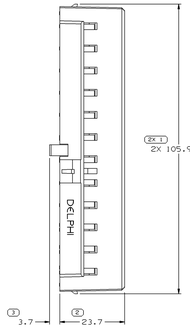

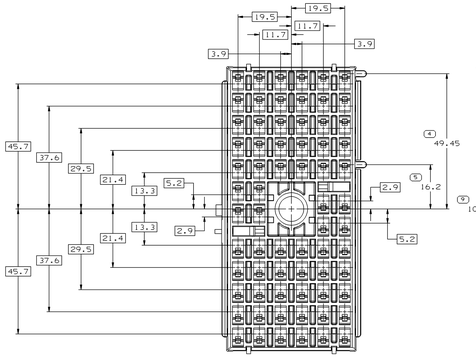

TYPE 101

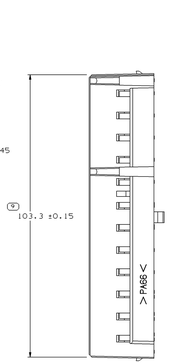

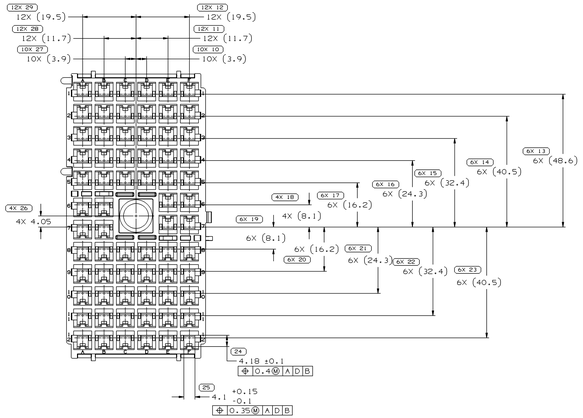

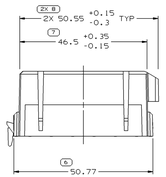

NOTES

1. UNLESS OTHERWISE SPECIFIED AND/OR INDICATED:
   DIMENSIONS ARE TO FACE OF VIEW SHOWN AND
   AUTOMATICALLY ROUNDED BY COMPUTER FOR INSPECTION.
   (SEE MATH MODEL FOR PRECISE DIMENSIONS.) FOR ALL
   OTHER DIMENSIONS NOT SHOWN BUT REQUIRED FOR TOOL
   BUILD. SEE MATH MODEL FOR PRECISE TOOL PATH DATA.

2. MATING COMPONENTS:
   SECONDARY LOCK 15328852 OR EQUIVALENT
   INSERT NUT 15329004 OR EQUIVALENT
   TERMINAL 12129425 OR EQUIVALENT
   COVER 15405475 OR EQUIVALENT
   MAXIMUM CORE CRIMP MUST BE LESS THAN 2.40 HIGH AND 3.75 WIDE.
   MAXIMUM INSULATION CRIMP MUST BE LESS THAN 6.10 HIGH AND 6.35 WIDE.
   MAXIMUM CABLE DIA 5.50 MM.

3. MATERIAL RECYCLING CODE PER ISO 11469. (2,3)X(0.11 CHARACTERS
   AS SHOWN TO BE LOCATED ON ANY EXTERIOR SURFACE.

4. (2,3)X(0.11 DELPHI CORPORATE BRAND TO BE LOCATED ON ANY
   EXTERIOR SURFACE, PREFERABLY VISIBLE AT FINAL ASSEMBLY.
   OPTIONAL CONSTRUCTION TO BE "PED".

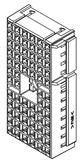

DRAWING NUMBER						
15491840						
SIZE	SCALE	FRAME NO	SHEET NO	STG	REV	N/P
A1x3	2:1	2 OF 2	1 OF 1	R	01	-

AC

15405472	03	AB		101	M35920I2 PA66 HS IM GRA LT	47.321	15405474
13512003	01	AA		102	M35920I2 PA66 HS IM GRA LT	47.811	13512005
PART NO	REV	N/P	STATUS	TYPE	MATERIAL SPECIFICATION AND COLOR	VOLUME	ASSEMBLY NUMBER

PART DRAWING

SEE CHART

UNLESS OTHERWISE SPECIFIED
THIS DOCUMENT IS IN ACCORDANCE WITH ASME Y14.5M-1994 DIMENSIONS ARE IN MILLIMETERS. DRAFTING PER DEPARTMENT STANDARDS. ALL GEOMETRIC TOLERANCES AND RELATED SYMBOLS APPLY UPON FULL FLATTENED FORM OF THE PART. ALL DIMENSIONS AND TOLERANCES ARE TO BE ACHIEVED TO INCLUDE ON LOCATION TOLERANCES. ALL DIMENSIONS ARE TO BE ACHIEVED AS SHOWN SEPARATELY, REGARDLESS OF DATUM REFERENCE.
ALL DIMENSIONS ARE IN MILLIMETERS

SUBSTANCES OF CONCERN: PVC RECYCLED CONTENT PER DELPHI (DP4900)

MATERIAL: SEE CHART

REFERENCE

(S) PROCESS SENSITIVE DIMENSION

DIMENSIONS ENCLOSED IN ( ) INDICATE REFERENCE DIMENSIONS AND NO TOLERANCE LIMITS ARE ESTABLISHED.

DIMENSIONAL RANGE (MM)

FROM	0	6	30	120	315	>100	>200	>400	>600	>800
TO	6	30	120	315	1000	200	400	600	800	1000

TOLERANCE UNLESS OTHERWISE SPECIFIED
±0.15 ±0.25 ±0.4 ±0.6 ±0.8 ±1.0 ±1.2 ±1.4
ANGULAR TOLERANCE ±2°

THIRD ANGLE PROJECTION

DO NOT SCALE

USE MATH DATA

DELPHI

DELPHI PACKARD ELECTRIC SYSTEMS
WARREN, OH

		DATE
DR		
APVD1	E. GARCIA	16NOV04
APVD2	E. GARCIA	16NOV04
APVD3	H. VILLALVA	16NOV04
APVD4		
APVD5		

DWG TYPE
STYLE
VOLUME (CM³) SEE CHART
SYSTEM CODE

DRAWING NAME
TAXI CONN 68 F M/P 280 FLXLK

DRAWING NUMBER						
15491840						
SIZE	SCALE	FRAME NO	SHEET NO	STG	REV	N/P
A1x3	2:1	1 OF 2	1 OF 1	R	01	-

04819241