SYMBOL DEFINITION		MISSING SYMBOLS
A DIMENSION WITHOUT AN INSPECTION REPORT SYMBOL ( ) DOES NOT REQUIRE INSPECTION. IT MAY BE CONTROLLED ON THE INDIVIDUAL COMPONENT DRAWING.	TOTAL NO OF INSPECTIONS REQUIRED 33	4-5
	LAST NO. USED 29	

DWG STATUS DATE	SIS	REV	N/P	CHG	ZONE	REVISION HISTORY	AUTH	DR	APVD1	APVD2
22SE05	R	07	-	-		15479266 - CONN WAS 15431111! 15479267 - CONN WAS 15431121! 15479268 - CONN WAS 15431113! 15479269 - CONN WAS 15431114! 15479270 - CONN WAS 15431115! 15479271 - CONN WAS 15431116! ALL PARTS - WERE ON SHT 1 AND 15.78±0.1 WAS 15.9±0.1	272789	EES	EES	SM
17NOV5	R	08	-	-		ALL PARTS - REVISED GRAPHICS	274865	PCP	PCP	SFM

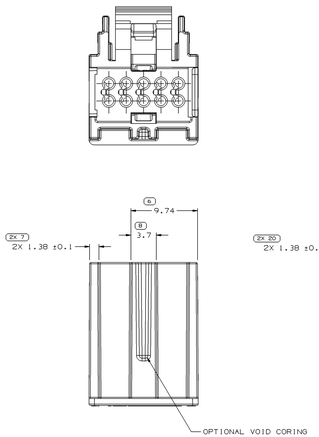

TYPE 202
SAME AS TYPE 101
EXCEPT AS SHOWN

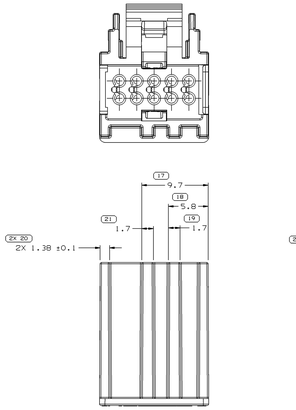

TYPE 203
SAME AS TYPE 101
EXCEPT AS SHOWN

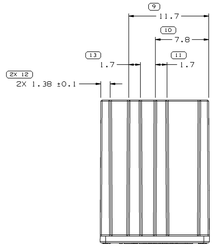

TYPE 204
SAME AS TYPE 101
EXCEPT AS SHOWN

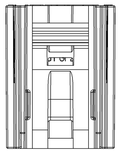

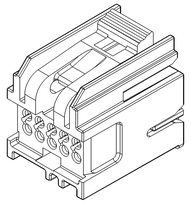

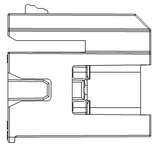

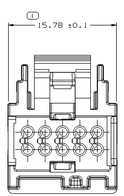

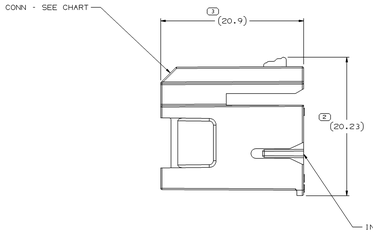

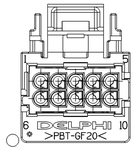

TYPE 201

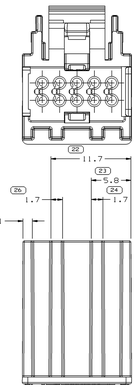

TYPE 205
SAME AS TYPE 101
EXCEPT AS SHOWN

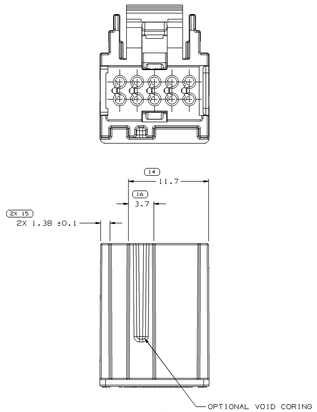

TYPE 206
SAME AS TYPE 101
EXCEPT AS SHOWN

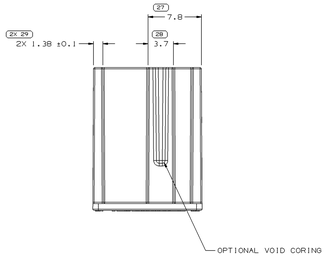

NOTES

1. UNLESS OTHERWISE SPECIFIED AND/OR INDICATED:

   DIMENSIONS ARE TO FACE OF VIEW SHOWN AND AUTOMATICALLY ROUNDED BY COMPUTER FOR INSPECTION. (SEE MATH MODEL FOR PRECISE DIMENSIONS.) FOR ALL OTHER DIMENSIONS NOT SHOWN BUT REQUIRED FOR TOOL BUILD, SEE MATH MODEL FOR PRECISE TOOL PATH DATA.

2. SEALING CODE 0 - UNSEALED
3. THIS PART ACCEPTS THE FOLLOWING COMPONENT OR EQUIVALENT:
   TERMINAL 15394147
   TPA 15433830
4. MAX INSULATION CRIMP MUST BE LESS Ø 2.
5. REFERENCE MATING COMPONENTS OR EQUIVALENT:
   CONNECTOR 15417924

15479271	02	AA		206	F	13524387	15431118
15479270	02	AA		205	E	13524386	15431118
15479269	02	AA		204	D	13524385	15431118
15479268	02	AA		203	C	13524384	15431118
15479267	02	AA		202	B	13524383	15431118
15479266	02	AA		201	A	13524382	15431118
PART NO	REV	N/P	STATUS	TYPE	USCAR TYPE	CONN	INRCONNECT

DRAWING NUMBER							
15431079							
SIZE	SCALE	FRAME NO	SHEET NO	STG	REV	N/P	
A1x3	5:1	2 OF 2	2 OF	R	08	-	

DWG TYPE	PART DRAWING
STYLE	
VOLUME (CM³) SEE CHART	SYSTEM CODE

UNLESS OTHERWISE SPECIFIED
THIS DOCUMENT IS IN ACCORDANCE WITH ASME Y14.5M-1994 UNLESS OTHERWISE SPECIFIED. DIMENSIONS ARE TO TOLERANCE ACCEPTANCE (TOL). ALL GEOMETRIC TOLERANCES AND RELATED DATUMS APPLY WITH MAX. MATERIAL CONDITION UNLESS OTHERWISE SPECIFIED. ALL DIMENSIONS ARE TO BE DETERMINED BY INTERPOLATION OR LOCATION TOLERANCES. DEPARTURES FROM DRAWING MUST BE MADE SEPARATELY, REFER TO DRAWING FOR DETAILS.
ALL DIMENSIONS ARE IN MILLIMETERS

N/A PROCESS SENSITIVE DIMENSION	REFERENCE
DIMENSIONS ENCLOSED IN ( ) INDICATE REFERENCE DIMENSIONS AND NO TOLERANCE LIMITS ARE ESTABLISHED.	

DIMENSIONAL RANGE (MM)									
FROM	>0	>6	>10	>18	>30	>100	>200	>300	>500
TO	6	10	18	30	100	200	300	500	
TOLERANCE UNLESS OTHERWISE SPECIFIED									
±0.15	±0.2	±0.25	±0.3	±0.4	±0.5	±0.8	±1	±1.2	
ANGULAR TOLERANCE ±2°									

THIRD ANGLE PROJECTION

DO NOT SCALE

USE MATH DATA

DELPHI

DELPHI PACKARD ELECTRIC SYSTEMS
WARREN, OH

		DATE
DR		
APVD1	E. SEIDEL	22SE05
APVD2	E. SEIDEL	22SE05
APVD3	S. MILLER	22SE05
APVD4		
APVD5		

SUBSTANCES OF CONCERN AND RECYCLED CONTENT PER DELPHI 10949001

MATERIAL
SEE DRAWING

DRAWING NAME
TAXI ASM CONN 10 F MICRO 64 MODULAR

DRAWING NUMBER							
15431079							
SIZE	SCALE	FRAME NO	SHEET NO	STG	REV	N/P	
A1x3	5:1	1 OF 2	2 OF	R	08	-	

1247310/9