| SYMBOL DEFINITION | | |
|---|---|---|
| A DIMENSION WITHOUT AN INSPECTION REPORT SYMBOL ( ) DOES NOT REQUIRE INSPECTION. IT MAY BE CONTROLLED ON THE INDIVIDUAL COMPONENT DRAWING. | TOTAL NO OF INSPECTIONS REQUIRED | 69 |
| | LAST NO. USED | 67 |

| MISSING SYMBOLS |
|---|
| NO MISSING SYMBOL NUMBER |

| DWG STATUS | | | | | ZONE | REVISION HISTORY | AUTH | DR | APVD 1 | APVD 2 |
|---|---|---|---|---|---|---|---|---|---|---|
| DATE | STG | REV | N/P | CHG | | | | | | |
| 05JA01 | R | 01 | - | - | | ALL ACTIVE PARTS-REDRAWN TO TOD, ADDED OPTIONAL CONSTRUCTION, REVISED DIMS (20 PLCS) & REVISED NOTES; 12004188, 12066325 & 12092218 - WERE SEPARATE DWGS | 205060 | JYD | EAR | RC |
| 08FE01 | R | 02 | - | - | | ALL PARTS - ADDED 10° MAX DIM, .080 ±.010 WAS .080, .3275±.0075 WAS .330 & REVISED NOTE 4; 12004188, 12066325 - R.03±.01 WAS R(3) | 206542 | EAR | EAR | RC |
| 08MR01 | R | 03 | - | - | | ALL ACTIVE PARTS - REVISED DIMS (8 PLCS) & ADDED NOTE 5 | 207529 | EAR | EAR | RC |
| 07MR02 | R | 04 | - | - | | ALL ACTIVE PARTS - DIMS 9,20 & 27 WERE .09 +/-.01 | 219675 | JGR | EOV | AL |
| 21MR02 | R | 05 | - | - | | ALL ACTIVE PARTS -UPDATED PDM ATTRIBUTES | 222796 | EOV | EOV | AL |
| 11MY04 | R | 06 | - | - | | 15492508, 15492510, 15492573 & 15492589 - RELEASED | 255159 | JTV | FKV | MR |
| 04AU04 | R | 07 | - | - | | UPDATED NOTE #1 | 257695 | LMB | LMB | MR |
| 31JA05 | R | 08 | - | - | | UPDATED MATERIAL SPEC | 262630 | MM | MM | MR |
| 08AU05 | R | 09 | - | - | | 08917444, 12004188, 12066325 & 12092218 OBSOLETE & ADDED NOTE IN CHART, 15492508 & 15492589 - 0.125 ±0.015 WAS 0.150 ±0.015 | 270872 | CJP | CJP | MR |

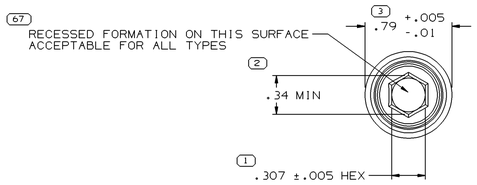


(SAME FOR 201 & 202 HEAD TYPES)

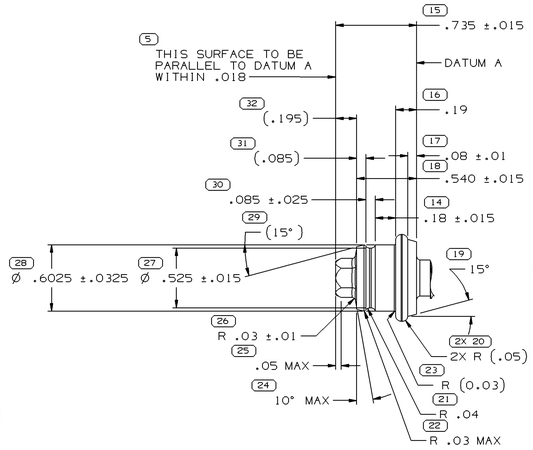


HEAD TYPE 201

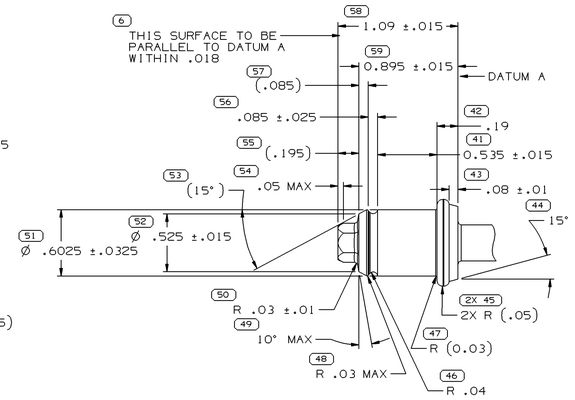


HEAD TYPE 202

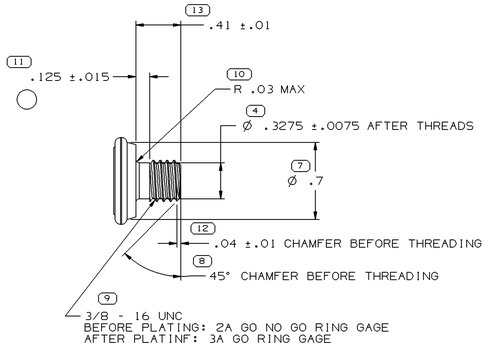


SHAFT TYPE 101

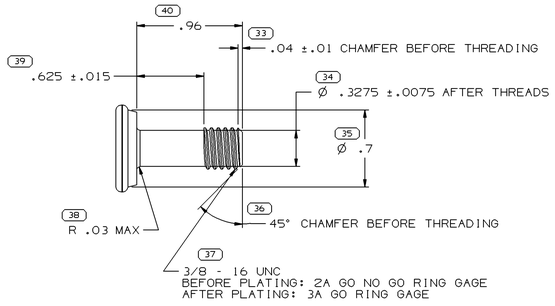


SHAFT TYPE 102

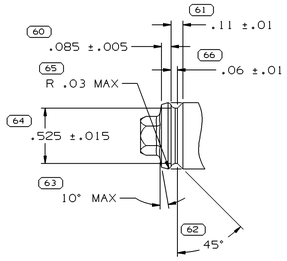


OPTIONAL CONSTRUCTION
(FOR SHAVED GROOVE)

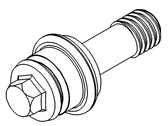

15492510

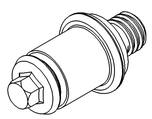

15492589

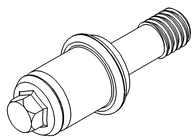

15492573

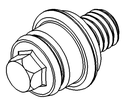

08917513
15492508
08917443

PROCESS NOTES

1. PLATED PER DX551263-P.
2. A WATER SOLUBLE LUBRICATING WAX TO BE APPLIED AFTER PLATING AND SEALER PROCESSES.
3. FINISH MUST WITHSTAND 200HRS MINIMUM BEFORE CORROSION IN NEUTRAL SALT FOG.
4. ZINC PLATE YELLOW CHROMATE PER POS-1065 WITH "PAVCO" SEALER. MINIMUM THICKNESS 350 MICRO INCHES.

NOTES

1. UNLESS OTHERWISE SPECIFIED AND/OR INDICATED: DIMENSIONS ARE TO FACE OF VIEW SHOWN AND AUTOMATICALLY ROUNDED BY COMPUTER FOR INSPECTION (SEE MATH MODEL FOR PRECISE DIMENSIONS). FOR ALL OTHER DIMENSIONS NOT SHOWN BUT REQUIRED FOR TOOL BUILD, SEE MATH MODEL FOR PRECISE TOOL PATH DATA.
2. TORQUE OF BOLT MUST NOT EXCEED 35 IN-LB. WITH THE USE OF A MAX. (AFTER PLATE) RING GAUGE OF .3344 PITCH DIAMETER.
3. HEX HEAD TO ACCEPT 5/16 DRIVE SIZE.
4. .3275 DIA & .6025 DIA MUST BE CONCENTRIC TO .790 DIA WITHIN ±.005 FOR TYPE 201 AND 202 HEADS
5. DIM 28, 52, & 64 REFER TO DIAMETER OF THE SHAVED GROOVE.

| PART NO | STATUS | REV | N/P | SHAFT TYPES | HEAD TYPES | PROCESS NOTES | REPLACED BY |
|---|---|---|---|---|---|---|---|
| 15492589 | | 03 | - | 101 | 202 | 1,2,3 | - |
| 15492573 | | 02 | AA | 102 | 202 | 1,2,3 | - |
| 15492510 | | 02 | AA | 102 | 201 | 1,2,3 | - |
| 15492508 | | 03 | - | 101 | 201 | 1,2,3 | - |
| 12092218 | OBSOLETE | 04 | AF | 101 | 202 | 2,3,4 | 15492589 |
| 12066325 | OBSOLETE | 08 | AF | 102 | 202 | 2,3,4 | 15492573 |
| 12004188 | OBSOLETE | 07 | AF | 102 | 201 | 2,3,4 | 15492510 |
| 08917513 | OBSOLETE | E | - | 101 | 201 | - | - |
| 08917444 | OBSOLETE | 09 | AF | 101 | 201 | 2,3,4 | 15492508 |
| 08917443 | OBSOLETE | F2 | - | 101 | 201 | - | - |

(N/A) PROCESS SENSITIVE DIMENSION

DIMENSIONS ENCLOSED IN ( ) INDICATE REFERENCE DIMENSIONS AND NO TOLERANCE LIMITS ARE ESTABLISHED

| DIMENSIONAL RANGE (IN) | | CHART J |
|---|---|---|
| FROM | 0 | >.500 |
| TO | .500 | |
| TOLERANCE UNLESS OTHERWISE SPECIFIED | | |
| ±.005 | | ±.010 |
| ANGULAR TOLERANCE ±2° | | |

DWG TYPE: PART DRAWING

STYLE

VOLUME (CM³)

DISTR CODE

UNLESS OTHERWISE SPECIFIED
THIS DOCUMENT IS IN ACCORDANCE WITH ASME Y14.5M-1994 AS AMENDED BY THE GM GLOBAL DIMENSIONING AND TOLERANCING ADDENDUM-2001. SEPARATE PATTERNS OF FEATURES MAY BE GAGED SEPARATELY REGARDLESS OF DATUM REFERENCES.

ALL DIMENSIONS ARE IN INCHES

REFERENCE

THIRD ANGLE PROJECTION

DO NOT SCALE

USE MATH DATA

UNIGRAPHICS

DELPHI

DELPHI PACKARD ELECTRIC SYSTEMS
WARREN, OH

| | | DATE |
|---|---|---|
| DR | | |
| APVD1 | W. STEIN | 03MY74 |
| APVD2 | D.E. THIRY | 07MY74 |
| APVD3 | D.A. BURGNER | 15MY74 |
| APVD4 | MATTHEW ROUSSEL | 11JN04 |
| APVD5 | | |

SUBSTANCES OF CONCERN AND RECYCLED CONTENT PER DELPHI 10949001

MATERIAL
DX520201

DRAWING NAME
TAXI MOUN BOLT HEX HD

DRAWING NUMBER
08917464

| SIZE | SCALE | FRAME NO | SHEET NO | STG | REV | N/P |
|---|---|---|---|---|---|---|
| A0 | 2:1 | 1 OF 1 | 1 OF 1 | R | 09 | - |