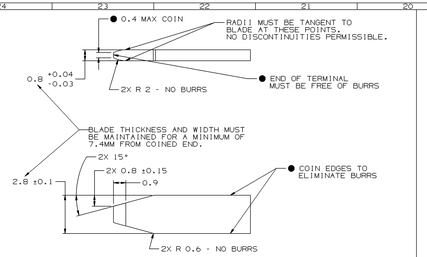

● THESE DIMENSIONS ARE CRITICAL TO THE MECHANICAL AND ELECTRICAL PERFORMANCE OF THE CONNECTION SYSTEM.

MATERIAL SPECIFICATIONS

RECOMMENDED

BASE METAL - CDA-210, EXTRA SPRING TEMPER

- TIN PLATING (WHERE APPLICABLE TO 125°C MAX CONTINUOUS USAGE): 0.0050±0.0025 MM (200±100 μIN) ELECTROPLATED TIN.
- USAGE OF PLATING TYPES OTHER THAN RECOMMENDED MUST BE APPROVED BY DELPHI PACKARD ELECTRIC SYSTEMS ENGINEERING.

MINIMUMS

ELECTRICAL CONDUCTIVITY - ≥28% IACS AT 20 °C. USE OF A MATERIAL WITH CONDUCTIVITY <28% IACS MUST BE APPROVED BY PACKARD ELECTRIC MATERIALS ENGINEERING.

TENSILE STRENGTH - 430 - 480 MPa

UNDERPLATING FOR TIN PLATING - FOR BASE MATERIALS CONTAINING 10% OR MORE ZINC, AN UNDERPLATE OF COPPER 0.0025 MM (100 μIN) MINIMUM THICK IS REQUIRED.

PROCESSING LUBRICANT - ANY PROCESSING LUBRICANT REMAINING ON TERMINALS MUST NOT VARNISH OR DEGRADE THE ELECTRICAL PERFORMANCE OF THE CONNECTION UP TO A MAXIMUM TEMPERATURE OF 150°C. PROCESSING LUBRICANTS MUST BE APPROVED BY DELPHI PACKARD ELECTRIC SYSTEMS ENGINEERING.

MATING BLADE INFORMATION

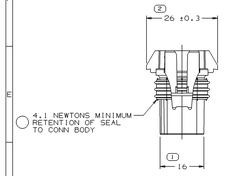

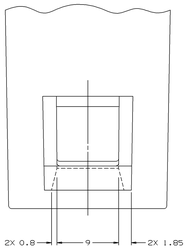

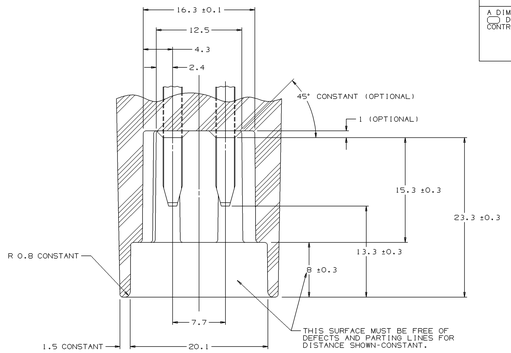

SECTION B-B

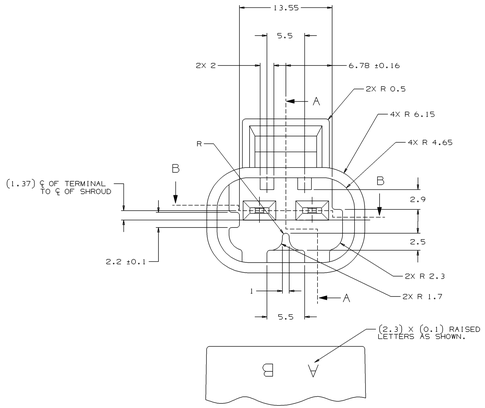

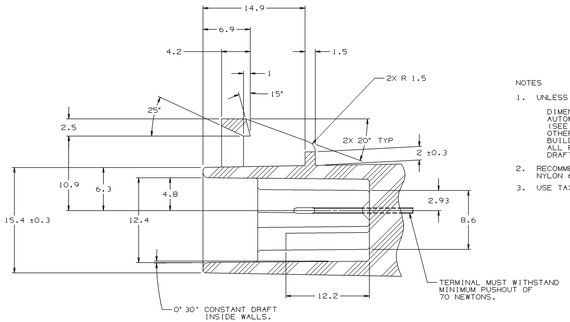

SECTION A-A

NOTES

1. UNLESS OTHERWISE SPECIFIED AND/OR INDICATED:

   DIMENSIONS ARE TO FACE OF VIEW SHOWN AND AUTOMATICALLY ROUNDED BY COMPUTER FOR INSPECTION (SEE MATH MODEL FOR PRECISE DIMENSIONS). FOR ALL OTHER DIMENSIONS NOT SHOWN BUT REQUIRED FOR TOOL BUILD, SEE MATH MODEL FOR PRECISE TOOL PATH DATA.
   ALL RADII 0.4
   DRAFT IS 1° ON ALL OUTSIDE SURFACES

2. RECOMMENDED MATERIAL - GLASS FILLED POLYESTER OR NYLON 66

3. USE TAXI 12084172 FOR INLINE CONNECTOR INFORMATION.

MATING INSERT MOLDED/"PANEL" CONNECTOR INFORMATION

SCALE 5:1

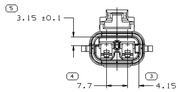

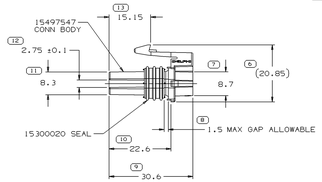

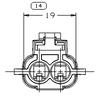

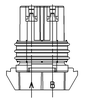

NOTES

1. UNLESS OTHERWISE SPECIFIED AND/OR INDICATED:

   DIMENSIONS ARE TO FACE OF VIEW SHOWN AND AUTOMATICALLY ROUNDED BY COMPUTER FOR INSPECTION (SEE MATH MODEL FOR PRECISE DIMENSIONS). FOR ALL OTHER DIMENSIONS NOT SHOWN BUT REQUIRED FOR TOOL BUILD, SEE MATH MODEL FOR PRECISE TOOL PATH DATA.

2. MATERIAL RECYCLING CODE PER ISO 11469. (2.31X10.1) CHARACTERS AS SHOWN TO BE LOCATED ON ANY EXTERIOR SURFACE.

3. MATING COMPONENTS OR EQUIVALENT:
   TERMINAL 12110847
   TERMINAL POSITION ASSURANCE 12077904
   CONNECTOR POSITION ASSURANCE 12052834
   CABLE SEAL 12015323

4. SEALING CODE 3 - DESIGN WILL PASS SALT FOG AND IMMERSION TEST AFTER CONDITIONING AS SPECIFIED IN ESA-644 (WEATHER-PACK),ESA-710 (METRI-PACK), ESA-650 (UNDERHOOD MICRO-PACK), C-4006 (WORLD CONNECTOR), ETC WHEN MATED TO MATING PART OR EQUIVALENT

5. (2.31X10.1) DELPHI CORPORATE BRAND TO BE LOCATED ON ANY EXTERIOR SURFACE, PREFERABLY VISIBLE AT FINAL ASSEMBLY. OPTIONAL CONSTRUCTION TO BE "PED".

6. REFERENCE MATING COMPONENTS OR EQUIVALENT:
   WINDOW LIFT MOTOR

7. WHEN PARTS ARE SHIPPED, THEY MUST BE PACKED IN PLASTIC BAGS OR SHIPPING CONTAINERS MUST BE LINED WITH PLASTIC LINERS. BAGS OR LINERS MUST BE SEALED TO AVOID ENTRY OF FOREIGN MATTER.

SYMBOL DEFINITION		
A DIMENSION WITHOUT AN INSPECTION REPORT SYMBOL ( ) DOES NOT REQUIRE INSPECTION. IT MAY BE CONTROLLED ON THE INDIVIDUAL COMPONENT DRAWING.	TOTAL NO OF INSPECTIONS REQUIRED	14
	LAST NO. USED	14

MISSING SYMBOLS
NO MISSING SYMBOL NUMBER

DWG STATUS DATE	STS	REV	W/P	CHG	ZONE	REVISION HISTORY	AUTH	DR	APVD 1	APVD 2
20JA05	R	01	-	-		RELEASED	266349	MDH	RTV	JWM
30MR05	R	01	AA	-		REVISED PART DESCRIPTION AND REVISED RETENTION OF SEAL TO CONN BODY NOTE	266353	RTV	JWM	RMF

DIMENSIONAL RANGE (MM)									
FROM	0	>6	>30	>120	>315	>1000	>2000	>3000	
TO	6	30	120	315	1000	2000	3000	4000	
TOLERANCE UNLESS OTHERWISE SPECIFIED									
±0.15	±0.2	±0.3	±0.5	±0.8	±1.2	±2	±3	±4	±5
ANGULAR TOLERANCE ±2°									

(14) PROCESS SENSITIVE DIMENSION

DIMENSIONS ENCLOSED IN ( ) INDICATE REFERENCE DIMENSIONS AND NO TOLERANCE LIMITS ARE ESTABLISHED.

REFERENCE

THIRD ANGLE PROJECTION

DO NOT SCALE

USE MATH DATA

DELPHI

DELPHI PACKARD ELECTRIC SYSTEMS
WARREN, OH

DWG TYPE: PART DRAWING

STYLE

VOLUME (CM³)

SYSTEM CODE

UNLESS OTHERWISE SPECIFIED
THIS DOCUMENT IS IN ACCORDANCE WITH ASME Y14.5M-1994 UNLESS OTHERWISE SPECIFIED. DIMENSIONS ARE TO FINISH OR PLATING, WHICHEVER IS GREATER. SEPARATE PATTERNS OF FEATURES MAY BE MADE SEPARATELY REGARDLESS OF DATUM REFERENCE.

ALL DIMENSIONS ARE IN MILLIMETERS

		DATE
DR		
APVD1	M. DE JESUS	20JA05
APVD2	FCO. R. KOPCA	25JA05
APVD3	D. FETCENKO	26JA05
APVD4		
APVD5		

MATERIAL: SUBSTANCES OF CONCERN AND RECYCLED CONTENT PER DELPHI 10949001
FINISH: SEE DRAWING

DRAWING NAME: ASM CONN 2 F M/P 280 GRA LT SLD

DRAWING NUMBER: 15497548

SIZE	SCALE	FRAME NO	SHEET NO	STS	REV	W/P
A1x3	2:1	1 OF 2	1 OF 1	R	01	AA

DRAWING NUMBER 15497548
SIZE A1x3 | SCALE 2:1 | FRAME NO 2 OF 2 | SHEET NO 1 OF 1 | STS R | REV 01 | W/P AA

842194 1