SYMBOL DEFINITION		MISSING SYMBOLS
A DIMENSION WITHOUT AN INSPECTION REPORT SYMBOL DOES NOT REQUIRE INSPECTION. IT MAY BE CONTROLLED ON THE INDIVIDUAL COMPONENT DRAWING.	TOTAL NO OF INSPECTIONS REQUIRED: 33	NO MISSING SYMBOL NUMBER
	LAST NO. USED: 28	

REVISION HISTORY										AUTH	DR	PROOF
DATE	SYM	ECN NO	PLP	CAE	ZONE							
16FEB15	R	01	-	-		MS PR2MAPP1 AND RELEASED PART DRAWING				42387R	AHD	AHD

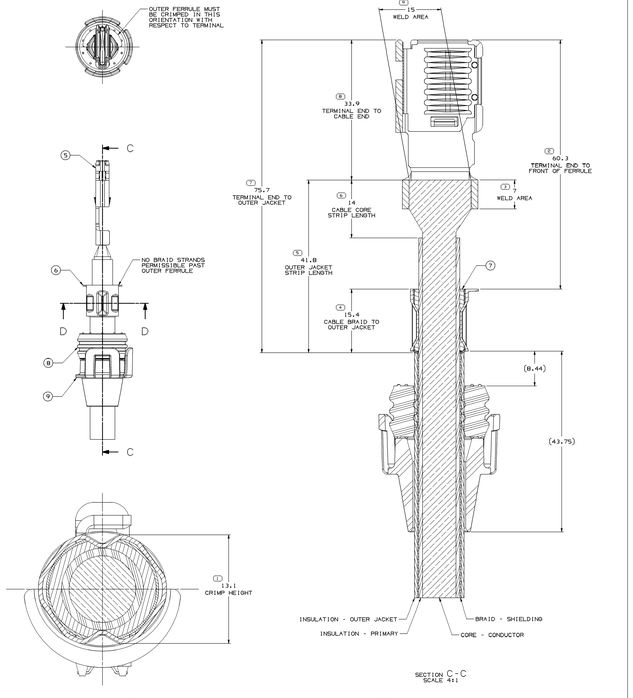

SECTION D-D
SCALE 8:1

SECTION C-C
SCALE 4:1

NOTE:

1. THE ASSEMBLY SHOWN ON THIS DRAWING REQUIRES THE USE OF 35MM² HIGH VOLTAGE SHIELDED CABLE PER M6040. FERRULES MUST BE CRIMPED AND ORIENTATED WITH RESPECT TO THE TERMINAL AS SHOWN & MEET PULL REQUIREMENTS OF USCAR 37.
2. CABLE MUST BE INSERTED THROUGH THE SEAL RETAINER (9) AND CABLE SEAL (8) BEFORE APPLICATION OF INNER (7) AND OUTER (6) FERRULES AND BEFORE APPLICATION OF TERMINAL ASM (5).
3. CABLE MUST BE PARTIALLY STRIPPED AND NO CORE STRANDS OR BRAID STRANDS ARE TO BE EXPOSED WHEN APPLYING THE SEAL RETAINER (9) AND CABLE SEAL (8).
4. ALL LEADS MUST BE HI-POT TESTED TO 3000 VOLTS (AC RMS) FOR 10 SECONDS.
5. CABLE ASSEMBLY MUST BE VALIDATED TO CUSTOMER REQUIREMENTS FOR THE APPLICATION.

CABLE ASSEMBLY
35MM² HV SHIELDED CABLE PER M6040

ITEM	PART NO	QTY	DESCRIPTION
9	1B32568	1	SEAL RETAINER
8	1B32566	1	CABLE SEAL
7	1B32560	1	INNER FERRULE
6	1B34464	1	OUTER FERRULE
5	1B51592	1	RIGHT ANGLE TERMINAL

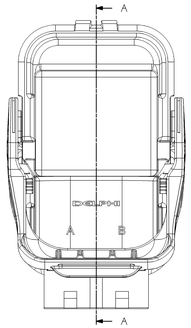

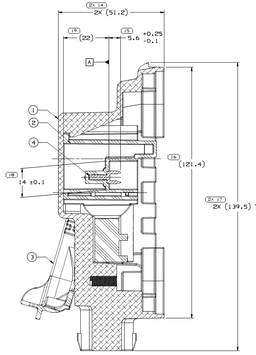

SECTION A-A

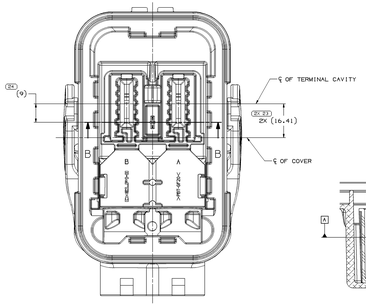

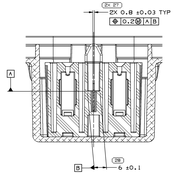

SECTION B-B

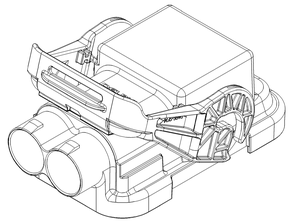

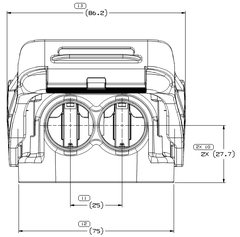

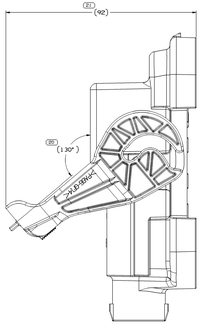

LEVER LOCK PRESTAGE POSITION

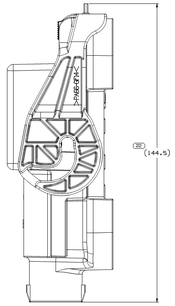

LEVER LOCK MATED POSITION

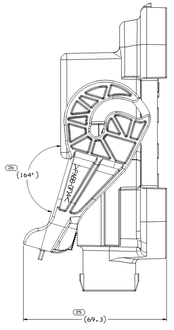

LEVER LOCK SHIPPING POSITION

NOTES

1. UNLESS OTHERWISE SPECIFIED AND/OR INDICATED:

   DIMENSIONS ARE TO FACE OF VIEW SHOWN AND AUTOMATICALLY ROUNDED BY COMPUTER FOR INSPECTION (SEE MATH MODEL FOR PRECISE DIMENSIONS). FOR ALL OTHER DIMENSIONS NOT SHOWN BUT REQUIRED FOR TOOL BUILD, SEE MATH MODEL FOR PRECISE TOOL PATH DATA.

2. THIS ASSEMBLY ACCEPTS 35MM² HIGH VOLTAGE CABLE PER M6040 SPECIFICATION.
3. FOR APPLICATION DATA SEE THE APPLICATION DRAWING.
4. CONNECTION MEETS USCAR 37 (REV 5) PARAGRAPH 5.1.4 T3, V2, S3, M1, (GM3191 V5).
5. CONNECTION MEETS DIELECTRIC WITHSTAND VOLTAGE RATING OF 1000V USING THE USCAR 37 (REV 5) PARAGRAPH 5.5.2 TEST METHOD.
6. SHORTEST NOMINAL CREEPAGE PATH POWER TERMINAL TO POWER TERMINAL PER IEC 60664 FOR THE MATED CONNECTION SYSTEM ON CABLE IS 26.65MM. OTHER SHORTEST NOMINAL CREEPAGE PATHS ARE AS FOLLOWS:

   A. 13.32MM: MATERIAL GROUP IIII: POWER TERMINAL TO SHIELD.
   B. 31.63MM: MATERIAL GROUP IIII: POWER TERMINAL TO INTERLOCK TERMINAL.
   C. 13.32MM: MATERIAL GROUP IIII: POWER TERMINAL TO FERRULE ALONG CABLE.

ITEM	PART NO	QTY	DESCRIPTION
4	1824777	1	TERM SHUNT
3	1799482	1	LOCK MECH ASST LEVER
2	1799483	1	LOCK INTERCONNECT
1	1799542	1	COV CONN PRT PACK

DELPHI
DELPHI PACKARD ELECTRICAL/ELECTRONIC ARCHITECTURE
DETROIT, MI
COPYRIGHT 2015 DELPHI TECHNOLOGIES PLC OR ITS AFFILIATES. ALL RIGHTS RESERVED.
THIS DRAWING IS THE PROPERTY OF DELPHI CORPORATION AND MAY NOT BE REPRODUCED OR COPIED WITHOUT THE WRITTEN PERMISSION OF DELPHI CORPORATION, OR IN ACCORDANCE WITH A LICENSE GRANTED BY DELPHI CORPORATION OR AN AUTHORIZED SUBSIDIARY.

DRAWING TYPE	PART DRAWING
SIZE	
ALLOW CHG?	STOP ORD
UNLESS OTHERWISE SPECIFIED: THIS DRAWING IS NO SUBMARINE BUILD DUE TO THE ITEMS LISTED BELOW. ALL ITEMS NOT LISTED ARE CONSIDERED TO BE SUBMARINE BUILD. ITEMS LISTED ARE EXCLUDED FROM SUBMARINE BUILD REQUIREMENTS.	
ALL DIMENSIONS ARE IN MILLIMETERS	
REFERENCE	