WIRE SIZE AWG	WIRE SIZE METRIC	INSULATION DIAMETER REF.	MVL UNSEALED PART NO.	MVL WATL TYPE PLATE OPT.	DELPHI UNSEALED PLATED PART NO.	DELPHI PART REV.	DELPHI NMC1 REV.	DELPHI UNPLATED PART NO.*	DELPHI PART REV.	DELPHI NMC1 REV.	MVL SEALED PART NO.	MVL WATL TYPE PLATE OPT.	DELPHI SEALED PLATED PART NO.	DELPHI PART REV.	DELPHI NMC1 REV.	DELPHI UNPLATED PART NO.*	DELPHI PART REV. UNPLATED	GAGE STAMP	A	B	Ø(C1)	C2	Ø(D1)	D2	K	L	(V)	(W)	TYPE OF GRIP
10/12	4.0/6.0	4.3/3.0	---	2,7	33400513	01	AA				---	2,7	33400513	01	AA			10AG	5.6	7.6	2.30	3.4	5.00	6.0	0.30	1.10	31.2	8.0	SEALED
											54001027	1,5	15516298	01	AA			10											
			---	2,7	33400512	01	AA											10AG		6.8			3.20	4.5		1.00	30.7	7.5	UNSEALED
			54001020	2,3	15512730	01	AA	15519823	01	AA								10AUS											
			54001001	1,5	10762774	03	AF											10											
2.5	2.5/3.0	3.4/3.0									F235410	2,7						12AG	5.6	7.6	2.30	3.2	4.60	5.7	0.30	1.00	31.2	8.0	SEALED
											F535410	3,6						12TS											
											F808800	1,5	15509074	01	AA			12											
																		12AG		---			---	---		---	---	---	UNSEALED NOT AVAILABLE
																		12TS											
																		12											
14/16	1.0/1.5	2.8/2.1									F035410	2,7						14AG	4.3	6.4	1.45	2.6	4.20	5.6	---	1.40	31.2	8.0	SEALED
											F335410	3,6						14TS											
											54001447	1,5						14											
			---	2,7	33400514	01	AA											14AG		5.1			2.25	3.5	---	0.60	30.7	7.5	UNSEALED
			---	2,4	33400515	01	AA											14AUA											
			54001441	2,3	13681974	01	AA	15519825	01	AA								14AU											
			54001401	1,5	10757692	03	AF											14											
2(18/20)	2(1.0/0.5)	2(2.2/1.4)	54001301	1,5	10757693	03	AA											13	4.4	6.3	1.00	3.1	1.75	4.3	---	0.60	30.7	7.5	UNSEALED
18/20	1.0/0.5	2.2/1.4									F135410	2,7						18AG	3.4	5.5	1.00	2.3	3.60	4.5	---	1.10	31.2	8.0	SEALED
											F435410	3,6						18TS											
											54001877	1,5						18											
			---	2,7	33400516	01	AA											18AG		4.2			1.75	3.0		0.60	30.7	7.5	UNSEALED
			F875200	2,4	15509076	01	AA	15520221	01	AA								18AUA											
			54001819	2,2	15425613	02	AA	15519829	01	AA								18AUD											
			54001818	2,3	15435215	01	AA	15519827	01	AA								18AUS											
			54001804	2,1	13805590	01	AA	15519824	01	AA								18AU											
			54001801	1,5	10762775	03	AF											18											
22	0.35	1.8/1.2	F975200	2,4	15520916	01	AA	15520917	01	AA								22AUA	3.1	3.6	1.00	2.2	1.40	2.7	---	0.60	30.7	7.5	UNSEALED
			54002230	2,3	33501642	01	AA											22AUS											
			54002229	2,2	15520890	01	AA	15520918	01	AA								22AUD											
			54002228	2,1														22AU											
			54002201	1,5	10762776	03	AF											22											

CABLE * SEAL (CS) UNSEALED (US)	WIRE SIZE AWG	WIRE SPEC. AWG.	WIRE SIZE METRIC	WIRE SPEC METRIC	CONDUCTOR CRIMP HEIGHT AWG (SECT C-C) (+/-0.05)	CONDUCTOR CRIMP HEIGHT METRIC (SECT C-C) (+/-0.05)	CONDUCTOR CRIMP WIDTH (SECT C-C) (+/-0.10)	INSULATION CRIMP HEIGHT AWG (SECT D-D) (+/-0.05)	INSULATION CRIMP HEIGHT METRIC (SECT D-D) (+/-0.05)	INSULATION CRIMP WIDTH (SECT D-D) (+/-0.10)	INSULATION CRIMP PUNCH OPTION	INSL. GRIP FORM TYPE SECD-D
US	22	ESB-MIL123-A MS-92288	0.35	FLRY A-B ISO-6722	1.40	1.30	2.05	1.95	1.95	2.60	OPTION 2	2
CS	18		0.75/1.00		1.50	1.30/1.50	2.45	4.20*	4.15/4.20*	4.10*		2
	20		0.50		1.30	1.25		4.05*	4.05			2
US	18		0.75/1.00		1.50	1.30/1.50		2.35	2.35/2.45	2.80		2
	20		0.50		1.30	1.25		2.20	2.20			2
CS	14		2.00/2.50		1.95	1.75/1.80	3.05	5.00*	4.80/5.00*	5.20*		2
	16		1.50		1.80	1.70		4.50/3.5*	4.50*			2
US	14		2.00/2.50		1.95	1.75/1.80		3.20	3.10*/3.25	3.60		2
	16		1.50		1.80	1.70		2.90	3.00			2
US	2(18/20)		2(1.0-0.5)		1.90-1.60*	1.90-1.60*	3.25	3.7-2.3*	3.7-2.3*	4.30*	OPTION 1	1
CS	N/A		2.5		N/A	1.80	3.45	N/A	5.00	5.20	OPTION 2	2
US	N/A		2.5					N/A	N/A	N/A		2
CS	10		5.00/6.00		2.45	2.40*/2.50*	3.85	5.70*	5.7/5.9*	5.80*		2
	12		4.00		2.20	2.05		5.30*	5.50*			2
US	10		5.00/6.00		2.45	2.40*/2.50*		3.70	4.30	4.35	OPTION 1	1
	12		4.00		2.20	2.30		USE 12 GA TERMINAL	4.20			1

* NOT VERIFIED TO USCAR-21

CRIMP WIDTH	CORE/ INSULATION	INSULATION CRIMP OPTION	E ±0.03	F ±0.03	G ±0.03	J ±0.03	K ±0.03	L ±0.03 OFFSET BETWEEN ANVILS	M ±0.03	N ±0.03	P ±0.03	R ±0.03	S ±0.03	T ±0.03	U ±0.03
2.05	CONDUCTOR	---	0.92	0.53	0.12	2.56	1.99	---	1.97	---	---	---	---	---	---
2.45	CONDUCTOR	---	1.09	0.63	0.16	3.06	2.38	---	2.36	---	---	---	---	---	---
2.60	INSULATION	2	---	---	---	---	---	0.60	---	0.16	3.25	2.53	2.50	N/A	N/A
2.80	INSULATION	2	---	---	---	---	---	0.60	---	0.18	3.50	2.72	2.69	N/A	N/A
3.05	CONDUCTOR	---	1.36	0.79	0.22	3.81	2.96	---	---	---	---	---	---	---	---
3.25	CONDUCTOR	---	1..45	0.84	0.22	4.06	3.12	---	---	---	---	---	---	---	---
3.45	CONDUCTOR	---	1.54	0.89	0.24	4.31	3.35	---	3.32	---	---	---	---	---	---
3.60	INSULATION	2	---	---	---	---	---	0.60	---	0.25	4.50	3.50	3.46	N/A	N/A
3.85	CONDUCTOR	---	1.72	0.99	0.28	4.81	3.70	---	---	---	---	---	---	---	---
4.10	INSULATION	2	---	---	---	---	---	0.60	---	0.30	5.12	3.98	3.94	N/A	N/A
4.30	INSULATION	1	---	---	---	---	---	0.60	---	0.32	5.38	4.17	4.13	1.92	1.11
4.35	INSULATION	1	---	---	---	---	---	1.10	---	0.38	5.10	4.70	4.64	---	---
5.20	INSULATION	2	---	---	---	---	---	1.00	---	0.40	5.50	5.00	4.94	---	---
5.80	INSULATION	2	---	---	---	---	---	1.00	---	0.47	6.10	5.60	5.52	---	---

CRIMP TOOL INFORMATION (REF. ONLY)

MATERIAL TYPE: PLATING OPT.	TYPE 2 OPTION # 1	TYPE 2 OPTION # 2	TYPE 2 OPTION # 3	TYPE 2 OPTION # 4	TYPE 1 OPTION # 5	TYPE 3 OPTION # 6	TYPE 2 OPTION # 7
PLATING	POST GOLD FLASH PALLADIUM (SHORTING BAR)	POST GOLD (SHORTING BAR)	POST HEAVY PALLADIUM-GOLD FLASH (IN LINE)	POST PALLADIUM- GOLD (IN LINE)	PRE-HOT DIP TIN (IN LINE)	PRE TIN/SILVER (INLINE)	POST SILVER (IN LINE)
ZONE "A"	SULFIMATE DUCTILE NICKEL	SULFIMATE DUCTILE NICKEL	SULFIMATE DUCTILE NICKEL	SULFIMATE DUCTILE NICKEL	HOT DIP TIN PLATE	TIN SILVER PLATE	ELECTRO DEPOSITED PURE SILVER, NICKLE UNDERPLATE NOT REQ.
ZONE "B"	ELECTRO MATT TIN PLATE	ELECTRO MATT TIN PLATE	ELECTRO MATT TIN PLATE	ELECTRO MATT TIN PLATE	HOT DIP TIN PLATE	TIN SILVER PLATE	ELECTRO MATT TIN PLATE
ZONE "C"	C-1, C-3: PLATE WITH HARD GOLD CAP OVER PURE PALLADIUM.	C-1, C-3: PLATE WITH HARD GOLD CAP	C2 ONLY: PLATE WITH HARD GOLD CAP OVER PURE PALLADIUM	C2 ONLY: PLATE WITH HARD GOLD CAP OVER PURE PALLADIUM	----	----	----
ZONE "D"	ELECTRO MATT TIN PLATE	ELECTRO MATT TIN PLATE	ELECTRO MATT TIN PLATE	ELECTRO MATT TIN PLATE	HOT DIP TIN PLATE	TIN SILVER PLATE	ELECTRO MATT TIN PLATE

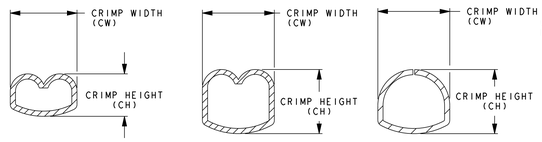

STANDARD "B" FORM TOOLING DESIGN
CONDUCTOR CRIMP

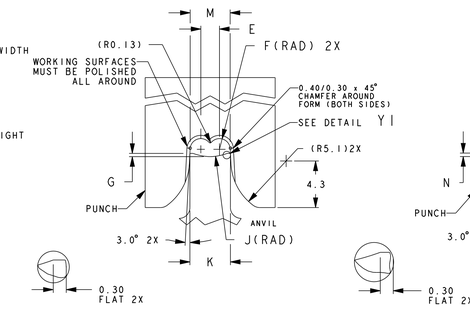

STANDARD "B" FORM TOOLING DESIGN
INSULATION CRIMP OPTION 1

STANDARD "D" FORM TOOLING DESIGN
INSULATION CRIMP OPTION 2

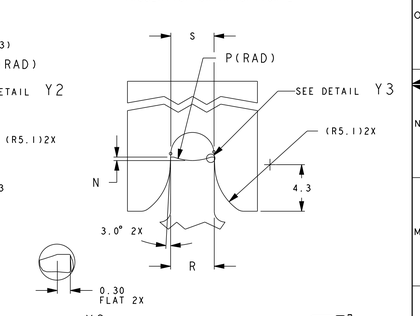

ACTUAL SIZE

54001001RWC	15512726	01	AA	54001001	10762774
F808800RWA	15512734	01	AA	F808800	15509074
54001441RWC	15522351	01	AA	54001441	13681974
54001401RWA	15524503	01	AA	54001401	10757692
54001401RWC	13969990	01	AA		
54001301RWC	15524504	01	AA	54001301	10757693
54001819RWA	15512733	01	AA	54001819	15425613
54001819RWC	15513652	01	AA		
54001818RWA	15516296	01	AA	54001818	15435215
54001818RWC	13971191	01	AA		
54001804RWA	15512732	01	AA	54001804	13805590
54001804RWC	15516297	01	AA		
54001801RWA	15516294	01	AA	54001801	10762775
54001801RWC	13751022	01	AA		
54002230RWA	15512731	01	AA	54002230	33501642
54002201RWA	15512725	01	AA	54002201	10762776
54002201RWC	13969981	01	AA		
MVL REWOUND PART NO.	DELPHI REWOUND PART NO.	DELPHI REV.	DELPHI NMC1 REV.	MVL PART NO.	DELPHI PART NO.
Available Types RWA or RWC				MADE FROM	

SEE REELING OPTIONS VIEW BELOW.

GAGE REQUIREMENTS

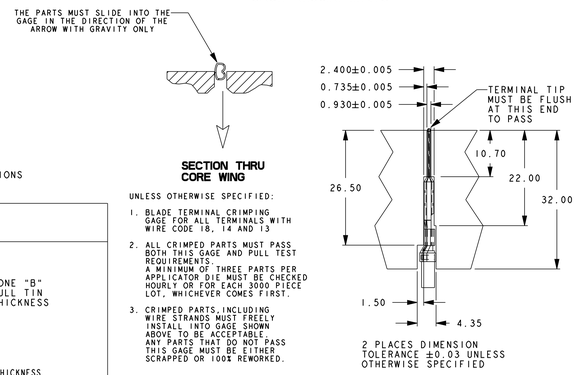

SECTION THRU CORE WING

UNLESS OTHERWISE SPECIFIED:

1. BLADE TERMINAL CRIMPING GAGE FOR ALL TERMINALS WITH WIRE CODE 18, 14 AND 13
2. ALL CRIMPED PARTS MUST PASS BOTH THIS GAGE AND PULL TEST REQUIREMENTS. A MINIMUM OF THREE PARTS PER APPLICATOR DIE MUST BE CHECKED HOURLY OR FOR EACH 3000 PIECE LOT, WHICHEVER COMES FIRST.
3. CRIMPED PARTS,INCLUDING WIRE STRANDS MUST FREELY INSTALL INTO GAGE SHOWN ABOVE TO BE ACCEPTABLE. ANY PARTS THAT DO NOT PASS THIS GAGE MUST BE EITHER SCRAPPED OR 100% REWORKED.

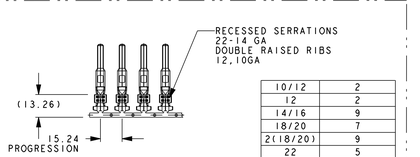

10/12	2
12	2
14/16	9
18/20	7
2(18/20)	9
22	5
GAGE	SERRATIONS

REELING OPTIONS

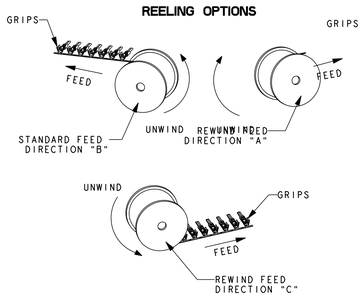

VIEW NOT TO SCALE

TERMINALS TO FEED AS SHOWN AFTER BEING REELED OFF PRODUCTION TOOL.
PACKAGING: PANCAKE REELS WITH PAPER INTERLEAF

NOTE:
1) DO NOT USE MVL PART NUMBERS FOR NEW ORDERS, MVL PART NUMBERS FOR REFERENCE ONLY

2) WHEN USING DELPHI PART NUMBERS,ORDER "DELPHI REWOUND PART NUMBER" (EX: 15512726)

3) IF DELPHI PART NUMBER IS NOT AVAILABLE REQUEST DELPHI PLATED PART NUMBER THEN "REWIND DIRECTION (AorC) (EX: 15520890 REWIND A)

VIEW OF PRECIOUS PLATING NOT TO SCALE

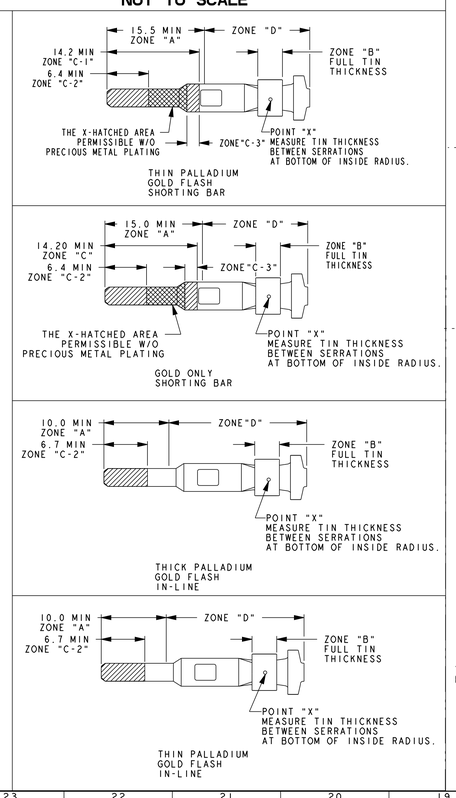

ENLARGED VIEW OF BLADE TIP COIN.

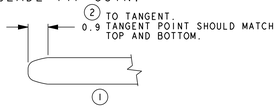

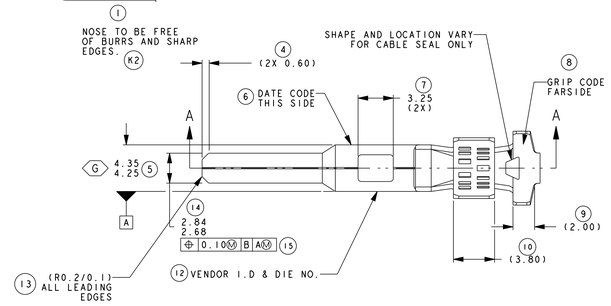

MATERIALS:

MATERIAL TYPE 1: COPPER ALLOY PRE PLATED, SEE PLATING CHART FOR INFORMATION

MATERIAL TYPE 2: COPPER ALLOY BARE MATERIAL, POST PLATED, SEE PLATING CHART FOR INFORMATION.

MATERIAL TYPE 3: COPPER ALLOY PRE PLATED, SEE PLATING CHART FOR INFORMATION

NOTES:

1) CONFORMS TO ALL APPLICABLE SECTIONS OF SAE/USCAR-2 REV.3 EXCEPT TERMINAL BEND RESISTANCE SECTION 5.2.2 SAE/USCAR-12 REV 2 SAE/USCAR-21 FORD SDS VER 11

2) TERMINAL SYMMETRICAL ABOUT CENTERLINE EXCEPT AS SHOWN.

3) DIMENSIONAL TOLERANCE:
1 PLACE ±0.25
2 PLACE ±0.10
ANGULAR ±3°

4) FOR CAVITY SPECIFICATION INFORMATION REFERENCE F.C.I. DRAWING 15007 FOR UNSEALED CAVITY AND F.C.I. DRAWING C15006 FOR SEALED CAVITY

5) SEE USCAR DRAWING EWCAP-001 FOR DIRECT CONNECT MATING BLADE INFORMATION

(X) 6) QUALITY ASSURANCE REQUIREMENTS PER USCAR REQUIREMENTS.(2)

(KX) 7) INDICATES IN-PROCESS INSPECTION FOR MANUFACTURING DIMENSIONS OR SPECIFICATIONS. (2)

(G) 8) INDICATES IN-PROCESS GAGE INSPECTION FOR MANUFACTURING DIMENSIONS. (2)

9) ONLY BALLOON DIMENSIONS AND NOTES ARE REQUIRED TO BE MEASURED AT PPAP. ALL OTHER DIMENSIONS AND NOTES WITHOUT BALLOONS SHOULD BE TREATED AS INFORMATIONAL.

10) LAST BALLOON NUMBER: 50, OMIT 3,11,21,22

CRIMP NOTES:

1. THE CRIMP AND CRIMP TOOLING DIMENSIONS HAVE BEEN ESTABLISHED AND VALIDATED TO USCAR-21 USING FCI TOOLS, MACHINES, AND PROCESSES. THE DIMENSIONS SHOWN ARE FOR REFERENCE.

2. WIRING SUPPLIERES ARE TO DEVELOP AND VALID THIER CRIMPING SPECIFICATIONS AND PROCESSES ACCORDING TO ALL ASPECTS OF USCAR-21 REV.2. NOTE THAT AS STATED IN USCAR-21, WIRING SUPPLIER DEFINED CRIMPING SPECIFICATIONS AND CRIMPING PROCESSES MAY IMPACT CONNECTOR FUNCTIONS. (SEE USCAR-21 REV.2 4.2.5.1). CONTACT DELPHI ENGINEERING FOR ANY NEEDED ASSISTANCE IN THIS REGARD.

3. DESIGN REFERENCE INFORMATION: IT IS RECOMMENDED THAT THE NOTED NOMINAL OFFSET BETWEEN THE CONDUCTOR GRIP AND INSULATION GRIP NOT BE CHANGED BY THE CRIMPING PROCESS. RESIZING THIS FEATURE DURING CIMPING CAN NEGATIVELY IMPACT CONNECTOR SYSTEM FUNCTION. ACCEPTBILITY OF THE ACTUAL NOTED CRMPED OFFSET, CRIMPING SPECIFICATION, AND CRIMPING PROCESS USED IS TO BE DETERMINED AS DIFINED IN CRIMP NOTE 2.

4. DESIGN FEFERENCE INFORMATION: CRIMPED TERMINALS ARE USED ON VARIOUS CONNECTOR APPLICATIONS. NORMALLY, FOR DESIGN PURPOSES, A CONDUTOR AND INSULATION CRIMP ANGLE TOLERANCE OF +/-3 DEGREES RELATIVE TO TERMINAL DATUM "B" CAN BE ASSUMED. ACTUAL CRIMP TOLERANCES DEFINED WITHIN A HARNESS MAKER'S CRIMPING PROCESS FOR A SPECIFIC CONNECTOR APPLICATION MUST BE VARIFIED AS SUITABLE BY FULL VALIDATION TO ALL ASPECTS OF USCAR-21 INCLUDING SECTION 4.2.5.

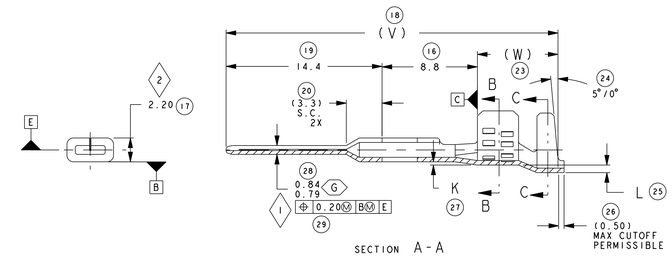

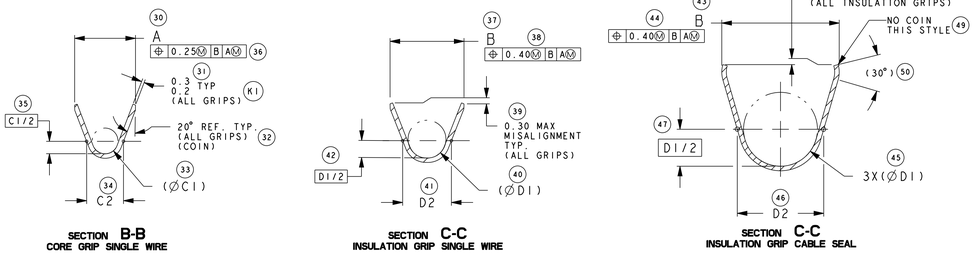

ECR-NO.	ZONE	CHANGE DESCRIPTION
13-00091	-	ECO421389 ADDED NMC1 REV. COLUMNS, 0.20, BLADE THICK,TRUE POS. WAS 0.10 DIM
13-00091	-	ECO421054 - TABLE UPDATED WITH NEW DELPHI PART NUMBERS. DELPHI PART NUMBERS MOVED FROM MVL TO DELPHI COLUMN IN TABLE.
13-00039	-	ECO421054 - DELPHI PART NUMBERS ADDED
-	-	REVISED AND REDRAWN IN POS.

COPYRIGHT DELPHI CORPORATION AND/OR ITS AFFILIATES. ALL RIGHTS RESERVED. REVISED THIS DRAWING IS THE PROPERTY OF DELPHI CORPORATION AND CONTAINS DELPHI CONFIDENTIAL INFORMATION. THE REPRODUCTION, DISTRIBUTION AND UTILIZATION OF THIS DOCUMENT OR ITS RELATED CAD DATA, AS WELL AS COMMUNICATION OF ANY CONTENT TO OTHERS, WITHOUT EXPRESS AUTHORIZATION, IS PROHIBITED.

PROJECT SPEC.	-
PACKAGING SPEC.	-
APPLICATION SPEC.	-
TOLERANCES	SEE NOTES
MATERIAL	-
SURFACE FINISH	-
COMPONENT No.	C15004-CUST
COLOUR	-
DO NOT MEASURE DRAWING	
TOOL NO.	D472
ECO Lev. Code	AN
CAD SYSTEM	DELPHI PACKARD ELECTRICAL/ELECTRONIC ARCHITECTURE REV. 12
DIMENSIONS IN MILLIMETERS	3RD ANGLE
DWG SIZE	A0
APPROVAL LEVEL	-
CREATED BY	09/09/09
MODIFIED BY	02/05/10
CHECKED BY	02/05/10
APPROVED BY	02/05/10
TITLE	BLADE TYPE - MALE
PROJECT	APEX 280MM SYSTEM
DRAWING NUMBER	C15005-CUST
REV.	V
STATE	SERIAL RELEASED
PART NUMBER	See Table
SHEET	1 OF 1
SCALE	5.00
FILE NAME	C15005-CUST
DOCUMENT UNDER PDS CONTROL NO MODIFICATION ALLOWED OUTSIDE	