DWG STATUS					ZONE	REVISION HISTORY	AUTH	DR	APVD 1	APVD 2
DATE	STG	REV	N/P	CHG						
29OC07	R	01	-	-		15438399 & 13672218 - RELEASED	295726	VMC	VMC	MMM
27MR13	R	02	-	-		15422501 - WAS SEPARATE DRAWING; 15520986,15520992,15520987,15520989, 15520991,15520993,15520995 - RELEASED; ALL PARTS - ADDED INSPECTION SYMBOLS/ BALLOONS AND UP DATED PASTE UP MVL DWG	421193	JEG	JAA	DAB
19JN14	R	03	-	-		13672218 - CORRECTED PART NUMBER CALLOUT, WAS 13672118	426829	JAA	JAA	DAB

PLATING NO.	PLATING TYPE / PROCESS	THICKNESS	APPLICABLE SPEC.	PLATING AREA
1	ELECTRO MATTE TIN PRE PLATED	50-100µ"		ALL OVER
2	*(a) PREVIOUS METAL NICKEL FLASH ALL OVER	FLASH OPTIONAL	NONE	ALL OVER
	*(b) SULPHAMATE DUCTILE NICKEL	50µ" MIN	ASTM B 689-90 TYPE 2	#3
	(C) GOLD ELECTRODEPOSITED 99% Au MIN-CODE C HARDNESS KNOOP 130-200 HK25	7.0 MIN AT 30µ" MIN.	ASTM B-488-95	#1
	(D) GOLD ELECTRODEPOSITED 99% Au MIN-CODE C HARDNESS KNOOP 130-200 HK25	11.1 MIN AT 30µ" MIN.	ASTM B-488-95	#2
	*(e) ELECTRO MATTE TIN/LEAD 95/5 (Sn/Pb)	100-300µ"	ES-F8DB-14A229-CA	#4
	*(f) OPT:100% PURE ELECTRO MATTE TIN PREFERRED		ASTM B-545-83	

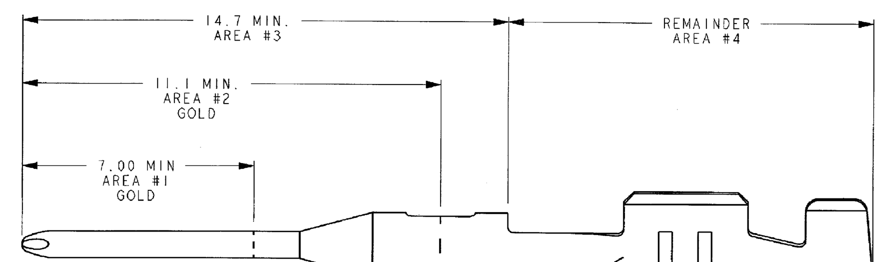

PLATING OPTIONS

* NOTE: FOR GOLD OPTIONS 2c AND 2d,PLATING PROCESSES 2a,2b,2e & 2f APPLY.

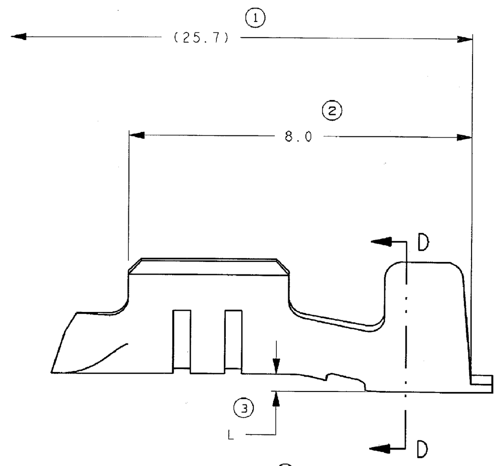

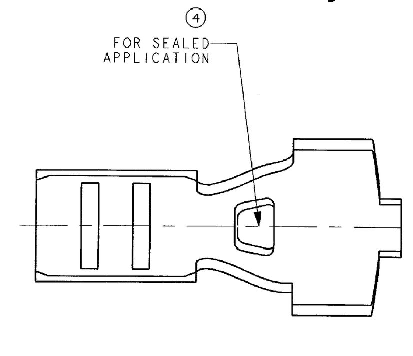

CABLE SEAL GRIP CONFIGURATION

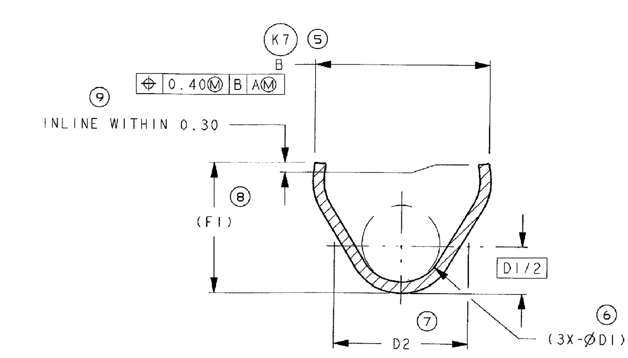

SECTION D-D
CABLE SEAL INSULATION

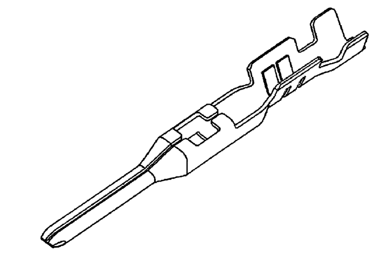

ISO VIEW
FOR REFERENCE ONLY

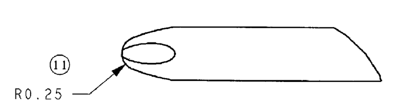

VIEW Y
NOSE COIN (K8)
MUST BE FREE OF BURRS
SCALE 20X

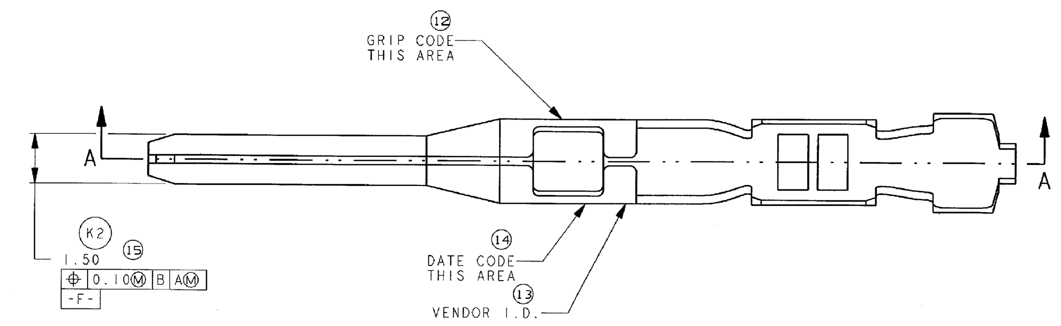

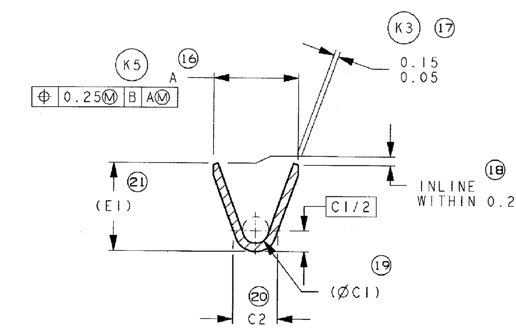

SECTION B-B
CONDUCTOR

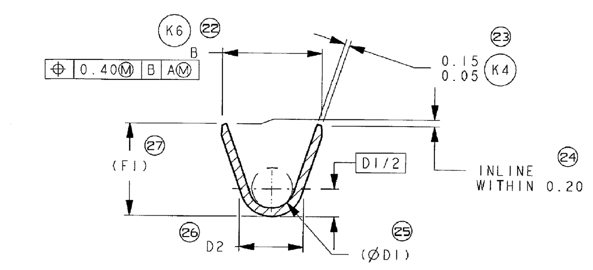

SECTION C-C
UNSEALED
INSULATION

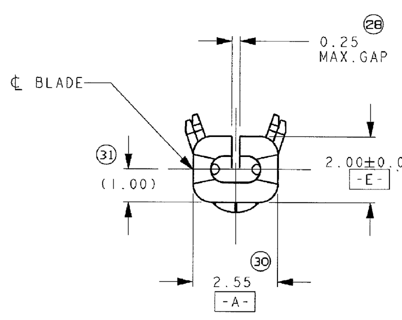

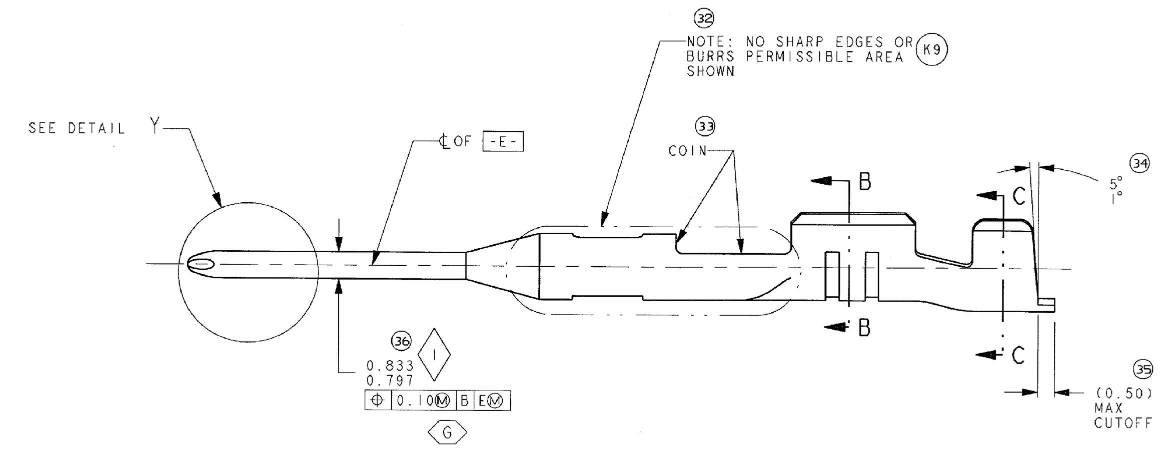

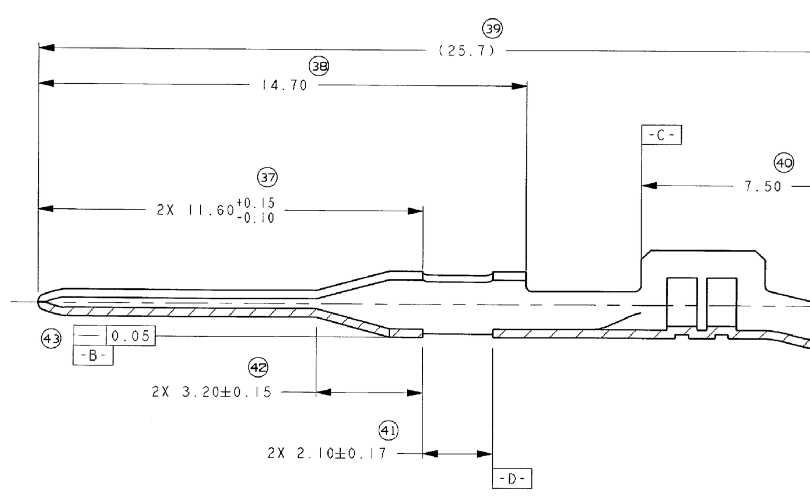

SECTION A-A

FCI PART NUMBER	GRIP CODE	WIRE SIZE	CONDUCTOR CW	CONDUCTOR CH	CONDUCTOR CRIMP STYLE	INSULATION CW	INSULATION CH	INSULATION CRIMP STYLE
54002237	22 AUL	22/24	1.85	1.05	"B"	3.10	3.10	"O"
54001846	18 AUL	18/20	2.05	1.27	"B"	3.50	3.50	"O"
54001438	14 AUL	14/16	2.45	1.55	"B"	4.10	4.10	"O"
54002236	22 AUL	22/24	1.85	1.05	"B"	2.20	1.85	"D"
54001845	18 AUL	18/20	2.05	1.27	"B"	2.60	2.25	"D"
54001437	14 AUL	14/16	2.45	1.55	"B"	3.20	2.65	"D"
54002235	22 AUG	22/24	1.85	1.05	"B"	3.10	3.10	"O"
54001844	18 AUG	18/20	2.05	1.27	"B"	3.50	3.50	"O"
54001436	14 AUG	14/16	2.45	1.55	"B"	4.10	4.10	"O"
54002234	22 AUG	22/24	1.85	1.05	"B"	2.20	1.85	"D"
54001843	18 AUG	18/20	2.05	1.27	"B"	2.60	2.25	"D"
54001435	14 AUG	14/16	2.45	1.55	"B"	3.20	2.65	"D"
54002233	22	22/24	1.85	1.05	"B"	3.10	3.10	"O"
54001842	18	18/20	2.05	1.27	"B"	3.50	3.50	"O"
54001434	14	14/16	2.45	1.55	"B"	4.10	4.10	"O"
54002232	22	22/24	1.85	1.05	"B"	2.20	1.85	"D"
54001841	18	18/20	2.05	1.27	"B"	2.60	2.25	"D"
54001433	14	14/16	2.45	1.55	"B"	3.20	2.65	"D"

CRIMP SPECIFICATION (MM)

SEE FCI PRODUCT EVALUATION LAB *APEX TERMINAL CRIMP GUIDELINES FOR CRIMP & WIRE INFORMATION. THESE GUIDELINES MUST BE FOLLOWED. NOT CRIMPING TO THESE GUIDELINES MAY RESULT IN ELECTRICAL OR MECHANICAL FAILURES.

CRIMP TOLERANCES FOR BOTH CONDUCTOR AND INSULATION CRIMPS TO BE AS FOLLOWS.

CW CRIMP WIDTH ±0.08
CH CRIMP HEIGHT ±0.05

NOTES: (44) MATERIAL: 0.254±.005 C19210 (H07)
TENSILE STRENGTH = 60-70 KSI
YIELD STRENGTH = (60 KSI MIN.)
ELONGATION% IN 51MM = 2 MIN.

(45) SEE PLATING OPTION VIEW FOR PLATING NOTES.

(46) ◇ QUALITY ASSURANCE REQUIREMENTS SPC DATA REQUIRE : 1

(47) (K) INDICATES IN-PROCESS INSPECTION FOR MANUFACTURING DIMENSION(S) OR SPECIFICATION(S) : 9

(48) ⟨G⟩ DENOTES GAGE REQUIREMENTS FOR USER AND MANUFACTURER

FCI P/N PART NUMBERS TIN PLATED	GRIP CODE	FCI P/N'S GOLD OPTION 2c	GRIP CODE GOLD 2c	FCI P/N'S GOLD OPTION 2d	GRIP CODE GOLD 2d	CABLE SEAL	UNSEALED OR END SEAL	GAGE	A	B	(ØC1)	C2	(ØD1)	D2	(ØE1)	(ØF1)	L
54002233	22	54002235	22 AUG	54002237	22 AUL	YES	—	22.24	2.6	4.3	0.8	1.4	2.6	3.3	2.6	3.7	0.75
54001842	18	54001844	18 AUG	54001846	18 AUL	YES	—	18.20	3.0	4.7	1.2	1.8	3.0	3.6	3.0	4.3	0.85
54001434	14	54001436	14 AUG	54001438	14 AUL	YES	—	14.16	3.8	5.7	1.4	2.0	3.4	4.3	3.8	4.9	1.05
54002232	22	54002234	22 AUG	54002236	22 AUL	—	YES	22.24	2.6	3.0	0.8	1.4	1.4	2.1	2.6	2.7	0.40
54001841	18	54001843	18 AUG	54001845	18 AUL	—	YES	18.20	3.0	3.8	1.2	1.8	1.8	2.4	3.0	3.3	0.40
54001433	14	54001435	14 AUG	54001437	14 AUL	—	YES	14.16	3.8	4.7	1.4	2.0	2.2	3.0	3.8	4.0	0.40

LAST BALLOON: (48)

ECN-NUMBER	DATE M-D-YY	REVISION	ZONE	CHANGE DESCRIPTION	DRAWN BY	CHK. BY	APPR. BY
9556	05-18-07	E3	A16,C17	UPDATED PER DDD MARK-UP (DIM. D2 CHANGED TO ONE DECIMAL PLACE, 2.10±0.17 WAS 2.10+0.17/-0.15)	VB	VB	VB
9363	03-08-07	E2	A17,C5	UPDATED PER DDD MARK-UP	VB	VB	VB
9272	02-19-07	E1	-	UPDATED/CORRECTED PER DDD MARK-UP	VB	VB	SSS
8757	08-14-06	E	ALL	NEW CUSTOMER DRAWING CREATED	VB	SSS	SSS

PRODUCT SPEC. - PACKAGING SPEC. - APPLICATION SPEC. -

THIS DRAWING AND ALL OTHER INFORMATION CONTAINED THEREIN IS PROPRIETARY AND THE PROPERTY OF FCI. This drawing may not be copied, reproduced or disclosed to any third party without the expressed written permission of FCI. © FCI April 1999

TOLERANCES 1 PLACE DIM ±0.25, 2 PLACE DIM ±0.10, ANGULAR DIM ±2° — MATERIAL: SEE NOTES — SURFACE FINISH — COUNTERPART NO. - — COLOR: - — DO NOT SCALE DRAWING — TOOL NO. D525 — ECO Loc. Code NA — 3RD ANGLE — DIMENSION IN MILLIMETERS — CAD SYSTEM pro / eng — DWG SIZE A0

	DATE	NAME
DRAWN BY	08-14-06	VINAYAK B.
CHECKED BY	08-14-06	SUCHA SIAN
APPROVED BY	08-14-06	SUCHA SIAN

TITLE: 1.50 APEX MALE TERMINAL — DRAWING NUMBER C18002-CUST — FILE NAME C18002-CUST — SHEET 1 of 1 — SCALE 10:1

NOTES

1. UNLESS OTHERWISE SPECIFIED AND/OR INDICATED:

DIMENSIONS ARE TO FACE OF VIEW SHOWN AND AUTOMATICALLY ROUNDED BY COMPUTER FOR INSPECTION (SEE MATH MODEL FOR PRECISE DIMENSIONS). FOR ALL OTHER DIMENSIONS NOT SHOWN BUT REQUIRED FOR TOOL BUILD, SEE MATH MODEL FOR PRECISE TOOL PATH DATA.

MVL PART NUMBER	MVL REV	SEALED	DELPHI PLATED PART NUMBER	PLATED REV	PLATED N/P	PLATED MAT'L SPEC	PLATING PROCESS OPTION	UNPLATED PART NUMBER	UNPLATED REV	UNPLATED N/P	UNPLATED MAT'L SPEC
54001433	E3	N	13672218	01	AB	M6573H92	-	-	-	-	-
54001845RWC	E3	N	15520987	01	-	15422501	-	-	-	-	-
54001845RWA	E3	N	15520989	01	-	15422501	-	-	-	-	-
54001845	E3	N	15422501	01	AA	15520986	2d	15520986	01	-	M6572H92
54002236RWC	E3	N	15520995	01	-	15520991	-	-	-	-	-
54002236RWA	E3	N	15520993	01	-	15520991	-	-	-	-	-
54002236	E3	N	15520991	01	-	15520992	2d	15520992	01	-	M6572H92
54001841	E3	N	15438399	01	AA	M6573H92	-	-	-	-	-

TOLERANCE UNLESS OTHERWISE SPECIFIED:
DECIMAL: ANGULAR ±2°
TWO PLACE SEE DRAWING
THREE PLACE SEE DRAWING

A ——— LINE DRAWN THROUGH A PART NUMBER INDICATES THAT PHYSICAL PARTS ARE NOT AVAILABLE FOR ORDERING.

PART NUMBERS THAT DO NOT HAVE A LINE PRESENT INDICATE THAT PHYSICAL PARTS ARE AVAILABLE FOR ORDERING.

CONTACT DELPHI SALES TO ASSURE AVAILABILITY OF PARTS.

DWG TYPE: PART DRAWING

STYLE

VOLUME (CM³) — DISTR CODE D

UNLESS OTHERWISE SPECIFIED
THIS DOCUMENT IS IN ACCORDANCE WITH ASME Y14.5M-1994 AS AMENDED BY THE GM GLOBAL DIMENSIONING AND TOLERANCING ADDENDUM-2001. SEPARATE PATTERNS OF FEATURES MAY BE GAGED SEPARATELY REGARDLESS OF DATUM REFERENCES.

ALL DIMENSIONS ARE IN MILLIMETERS

REFERENCE

THIRD ANGLE PROJECTION — DO NOT SCALE — USE MATH DATA — CAD — NX

DELPHI
DELPHI PACKARD ELECTRICAL/ELECTRONIC ARCHITECTURE
WARREN, OH

COPYRIGHT 2007 DELPHI CORPORATION AND/OR ITS AFFILIATES.
ALL RIGHTS RESERVED.
REVISED 2013
THIS DRAWING IS THE PROPERTY OF DELPHI CORPORATION AND CONTAINS DELPHI CONFIDENTIAL INFORMATION. THE REPRODUCTION, DISTRIBUTION AND UTILIZATION OF THIS DOCUMENT OR ITS RELATED CAD MATH DATA, AS WELL AS COMMUNICATION OF ANY CONTENT TO OTHERS, WITHOUT EXPRESS AUTHORIZATION, IS PROHIBITED.

		DATE
DR		
APVD1	MEZA, VERONICA	29OC07
APVD2	MEZA, VERONICA	29OC07
APVD3	MIRAMONTES MOISES	30OC07
APVD4		
APVD5		

SUBSTANCES OF CONCERN AND RECYCLED CONTENT PER DELPHI 10949001

MATERIAL: SEE CHART

DRAWING NAME: TAXI TERM M 1.5

DRAWING NUMBER: 13672903

SIZE	SCALE	FRAME NO	SHEET NO	STG	REV	N/P
A0	NONE	1 OF 1	1 OF 1	R	03	-

User: wz027c Part: 13672903-CUS01-S01 Date: 19-Jun-14 Time: 16:06 Message: