3.5 Mono Custom Molding Plug

171-P3154-L-E

Date Last Revised: 7/13/21

DIMENSIONS: mm

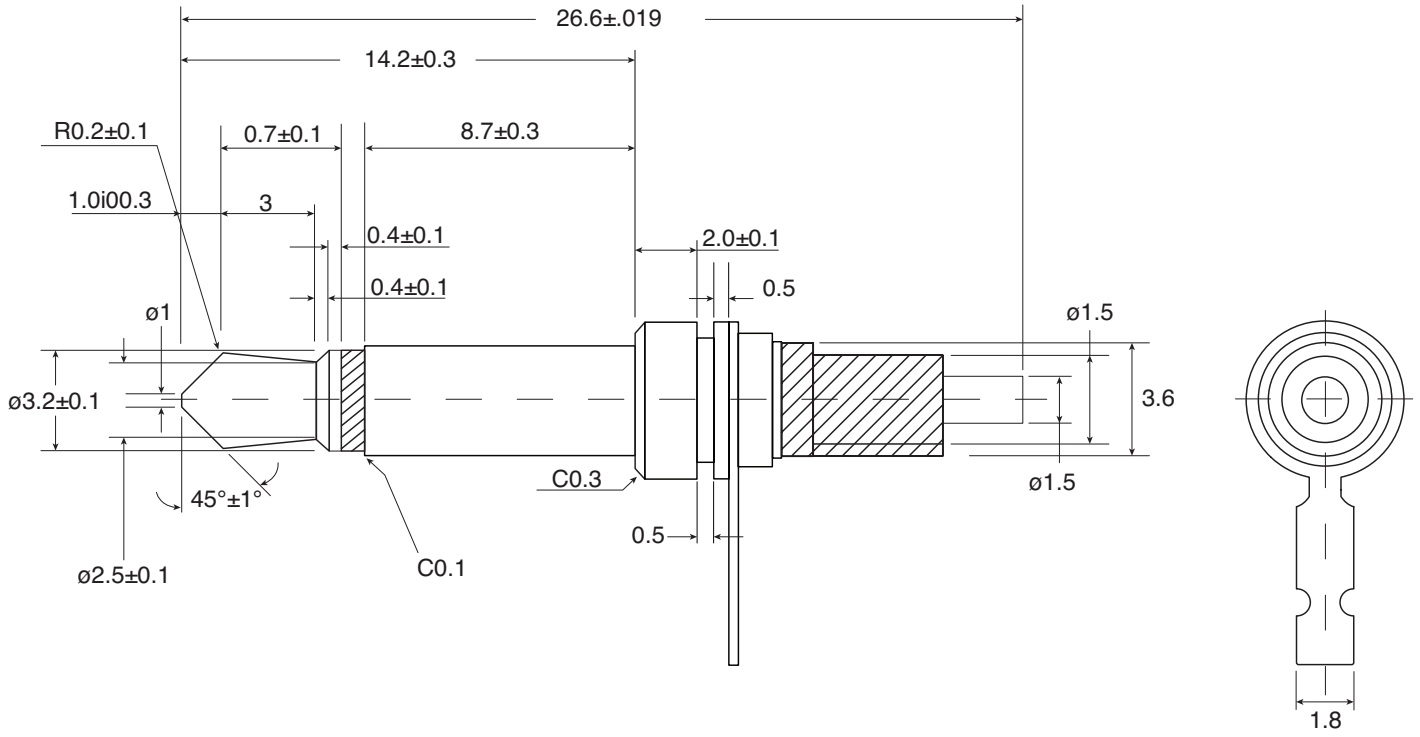

Specifications:

- Dielectric Strenght : AC 500V@1min.
- Insulation Resistance : DC 500V/100MΩ 1min.

Note: RoHS Compliant by Exemption

Specifications are subject to change without notice. No liability or warranty implied by this information. Environmental compliance based on producer documentation.