# 3.5mm 4 Conductor Plug

171-PA3913-EX

**Date Last Revised: 06/26/19**

**DIMENSIONS: mm**

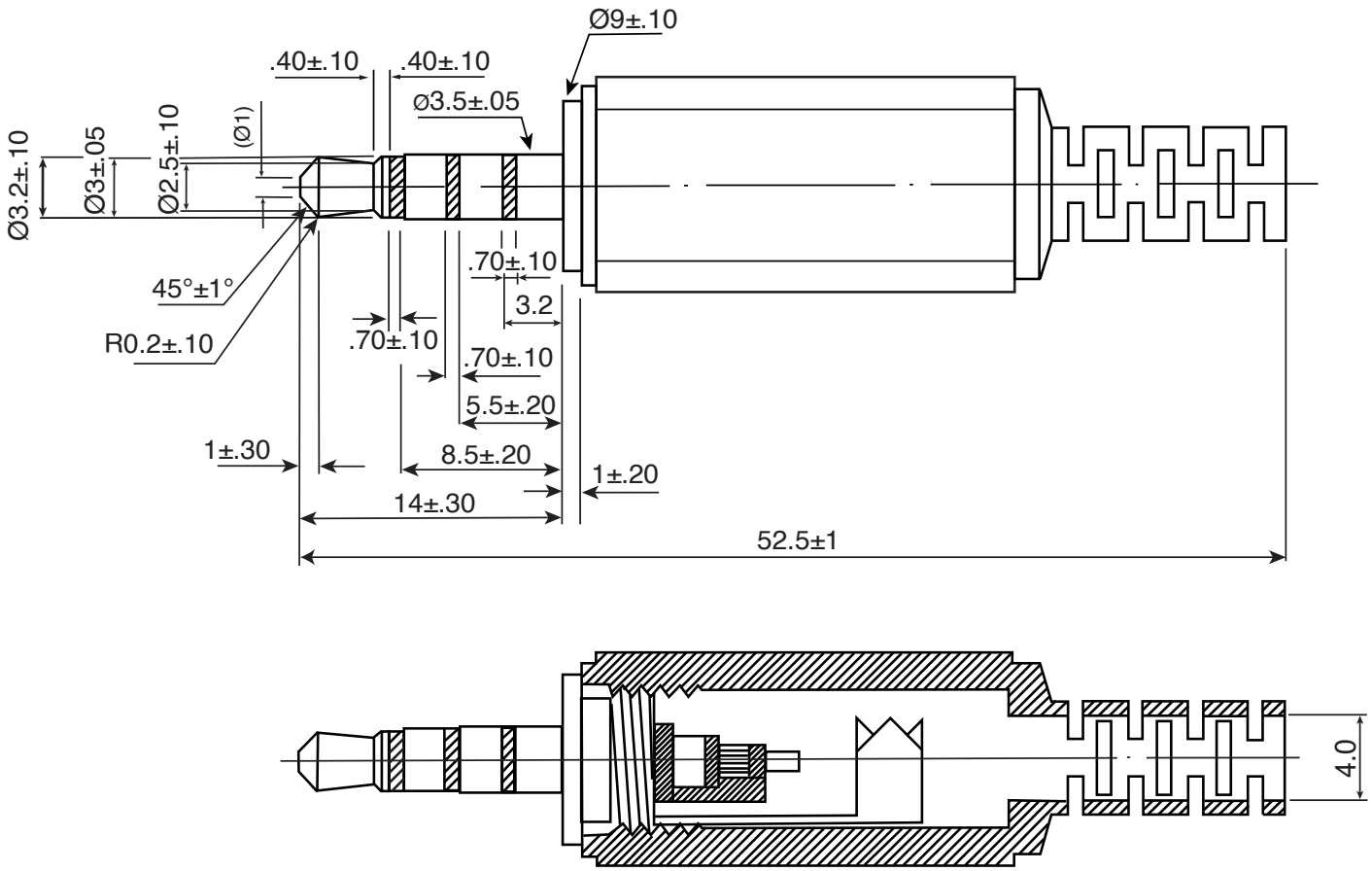


**Note:**

- RoHS Compliant by Exemption




Specifications are subject to change without notice. No liability or warranty implied by this information. Environmental compliance based on producer documentation.