-1 本図

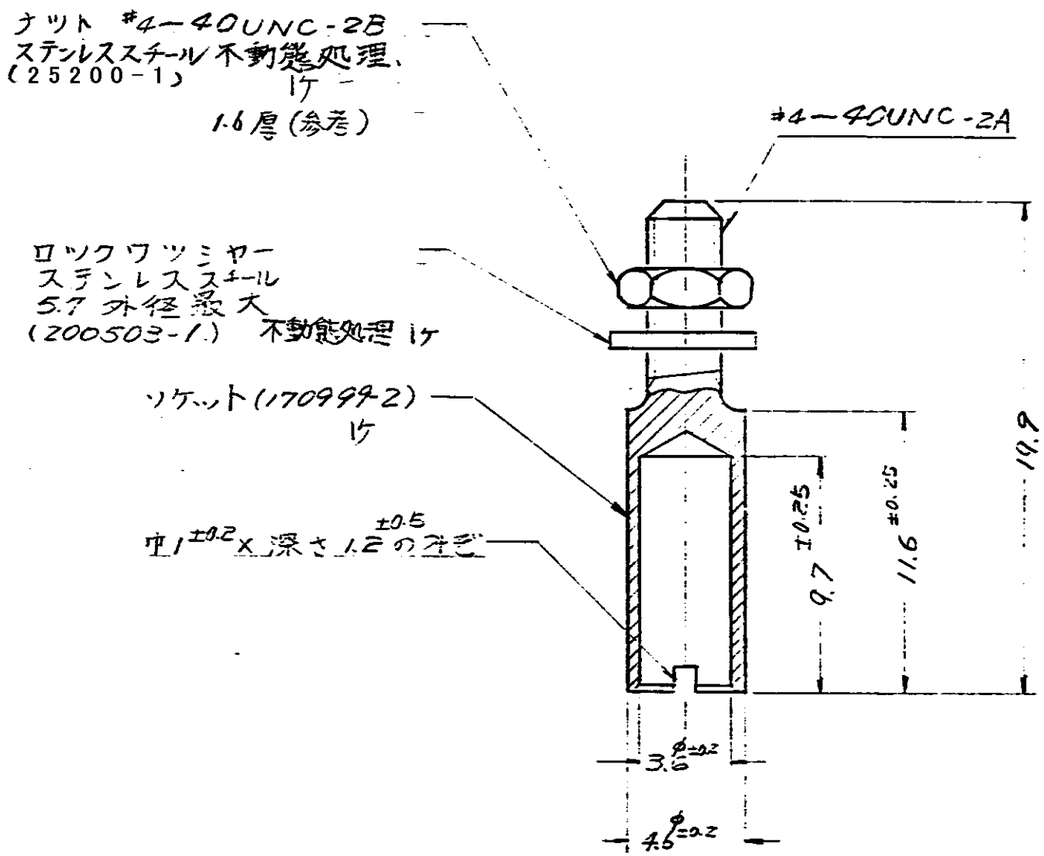

171081-1	黄銅	錫めっき	類似200590-4
型番	材料	仕上	備考

部番 NUMBER	品名 NAME	備考 REMARKS	ITEM NO.

REQUIRED PER ASSEMBLY

E	REVISED FJD0-0320-04	Y.Y	D.M	13SEP '04	
D	ECN J1-3956	YA			
C	REVISED				
B	REVISED TOLERANCE				
A	REVISED				
0	RELEASED				
LTR.	REVISION RECORD	DR.	CHK.	DATE	

C-171081

DESCRIPTION

© 1972 BY AMP JAPAN, LTD.
ALL RIGHTS RESERVED. AMP PRODUCTS COVERED BY PATENTS AND/OR PATENTS PENDING

参考図面
CUSTOMER COPY
REFERENCE ONLY

MATERIAL: 表参照
FINISH: 表参照
WIRE RANGE
INSULATION DIA.
DR. 7/27/71
CHK. 3/30/71
DE.
APP.
TOLERANCE EXCEPT AS NOTED
SCALE 4-1

tyco Electronics
Tyco Electronics AMP K.K
Kawasaki, Japan

CLASS
TYPE
SIZE J | SHEET NO. C-171081 | REV. E

NAME: コーナーガイドソケット

DIMENSIONS IN MM. DO NOT SCALE PRINT

AMP J 030-2