DWG NO.	SH	REV.
20499-111	1	A

REVISIONS

REV	DESCRIPTION	DATE	APPROVED
–	INITIAL RELEASE.	96/01/18	R.JOHNSON
A	REV PER ECO 3823.	94/07/15	L.PULOTU

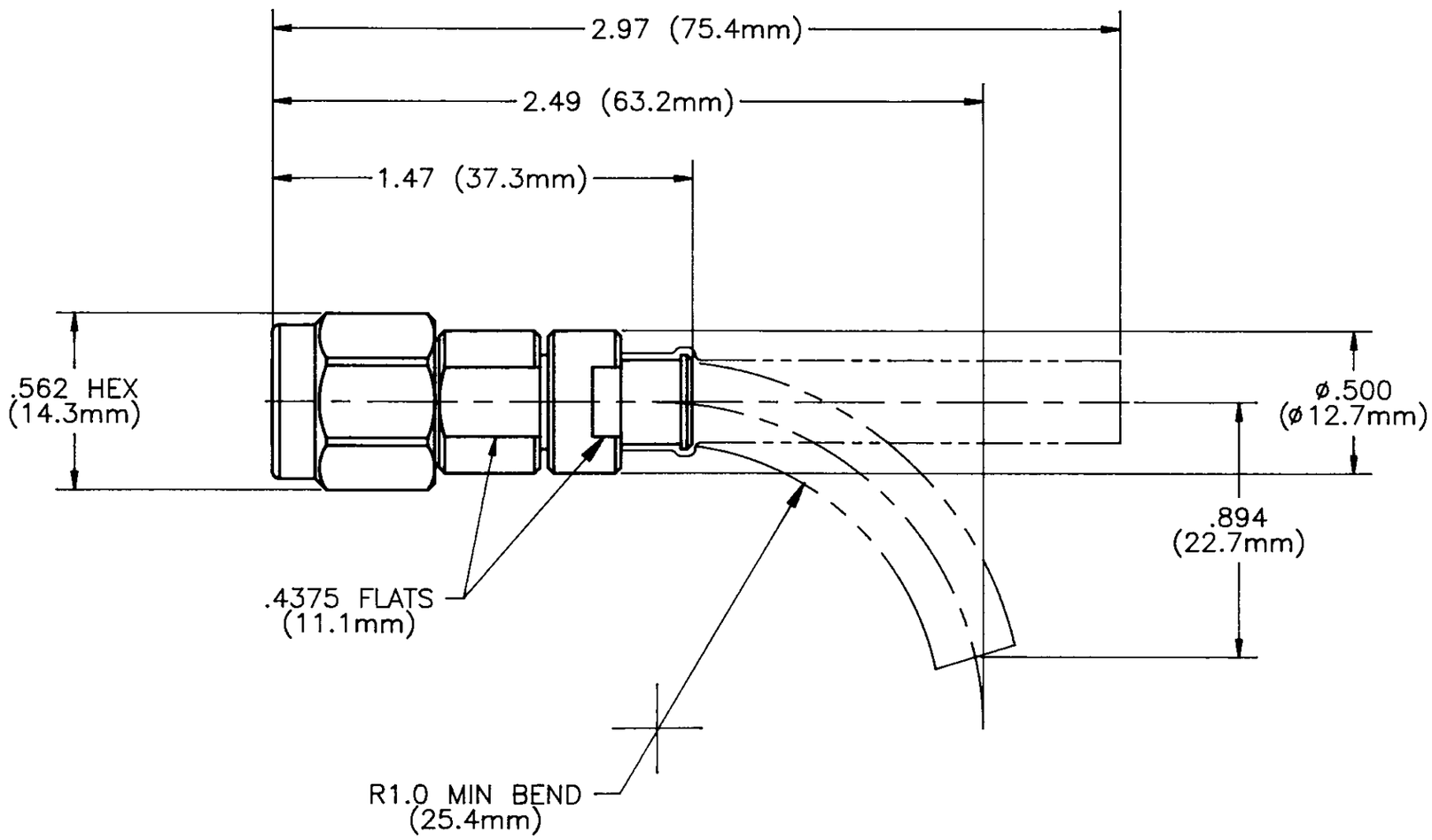

NOTES: UNLESS OTHERWISE SPECIFIED.
1. REF: XTNC-C-P-STR-HP190-PF-SC-16-XXXXXXX.

ITEM NO.	QTY REQD	FSCM NO.	PART OR IDENTIFYING NO.	NOMENCLATURE OR DESCRIPTION	MATERIAL SPECIFICATION	TYPE

PARTS LIST

NEXT ASSY	USED ON

APPLICATION

UNLESS OTHERWISE SPECIFIED DIMENSIONS ARE IN INCHES
TOLERANCES ARE:
FRACTIONS ± DECIMALS .XX ± .XXX ± ANGLES ±

MATERIAL: SEE PARTS LIST

FINISH

DO NOT SCALE DRAWING

CONTRACT NO.

SIGNATURES		DATE
DRAWN BY	M. BONE	95/04/26
CHECKED BY	B. NOTHUM	96/01/16
APPROVED BY	S. HARDIN	96/01/16
APPROVED BY	D. CWIKLA	96/01/16

Sentilea Inc
5550 E. McDOWELL RD.
MESA, ARIZONA 85215
(602) 985-9000

TNC STR PLUG TO HP190

SIZE	FSCM NO.	DWG NO.	REV
B	60637	20499-111	A

SCALE 2/1 | SEM 02-09 (9/89) | SHEET 1 OF 2