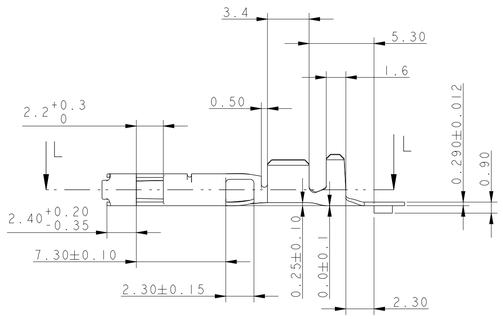

SECTION A-A

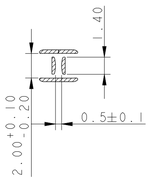

SECTION C-C

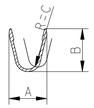

SECTION D-D

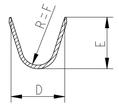

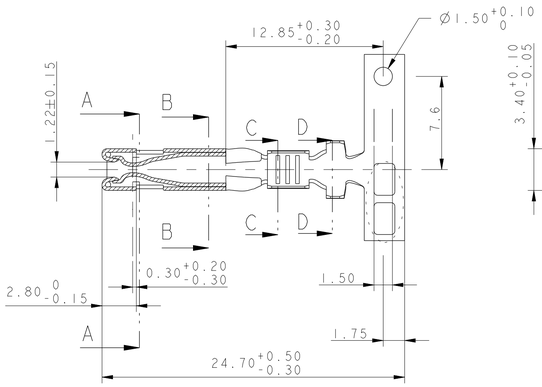

1/2 SECTION L-L

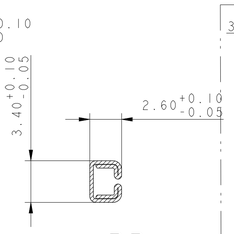

SECTION B-B

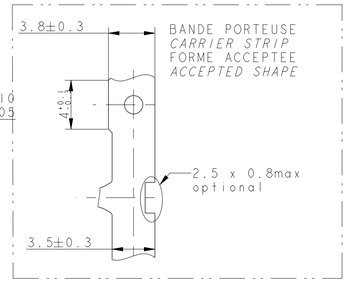

Etat / State		CONTACT / TERMINAL																		Matiere Material	Temp Marquage Class Mark	
		RECOUVREMENT OVERLAPING		JUF / SWS		RECOUVREMENT OVERLAPING		JUF / SWS		FRETAGE JUXTAPOSE SIDE BY SIDE INSULATION		RECOUVREMENT OVERLAPING		JUF / SWS		RECOUVREMENT OVERLAPING		JUF / SWS				
		P/N	Rev.	P/N	Rev.	P/N	Rev.	P/N	Rev.	P/N	Rev.	P/N	Rev.	P/N	Rev.	P/N	Rev.	P/N	Rev.			
Pré-étamé Pre-tinned Sn 1 to 3µm	MVL	211 CC 2 S 0150 P	G			211 CC 2 S 1150 P	G					211 CC 2 S 4150 P	G			211 CC 2 S 2150 P	G			Cu Zn 15	85°	NO
	(P) DELPHI					13777390	01									13777391	01					
	MVL	211 CC 2 S 0160 P	G	211 CC 2 S 0161 P	G	211 CC 2 S 1160 P	G	211 CC 2 S 1161 P	G	F562500	G	211 CC 2 S 4160 P	G	211 CC 2 S 4161 P	G	211 CC 2 S 2160 P	G	211 CC 2 S 2161 P	G	Cu Fe 2P	125°	125
	(P) DELPHI	13625048	01	13761649	01	10863984	01	13761154	01		01	10865182	01	13761651	01	10863985	01	13761648	01			
	MVL					211 CC 2 S 1190 P	G					211 CC 2 S 4190 P	G			211 CC 2 S 2190 P	G			Cu Cr Ag Fe Ti Si	125°	150
	(P) DELPHI					13602481	01					33501712	01			33511808	01					
Pré-pisté Pre-tracked 1.27µm in	MVL	211 CC 2 S 0460 P	G			211 CC 2 S 1460 P	G	211 CC 2 S 1461 P	G	F962500	G	211 CC 2 S 4460 P	G			211 CC 2 S 2460 P	G			Cu Fe 2P	125°	125
	(P) DELPHI	13764603	01			13764604	01					33500701	01			13764602	01					
(P)	Section Gauge	0.22				0.35 to 0.70						0.75 to 1.3				1.35 to 2						
(P)	Ø Isolant Ø Insulation	1.15 to 1.35				1.25 to 2.1						1.6 to 2.6				2.1 to 2.8						
	A	1.53				2.6						2.88				3.1						
	B	1.87				2.2						2.86				3.5						
	R=C	0.33				0.75						0.75				0.75						
	D ± 0.30	2.87		4.7		4.2		4.7		3.00		4.7		5		4.7		5				
	E	3.05		4.15		3.3		4.15		3.00		4.2		4.5		4.2		4.5				
	R=F	0.68		1.35		1.3		1.35		0.80		1.3		1.35		1.3		1.35				
Poids sans bande porteuse Weight without strip carrier		0.00043kg		0.00042kg		0.00045kg		0.00044kg		0.00042kg		0.00046kg		0.00045kg		0.00047kg		0.00046kg				

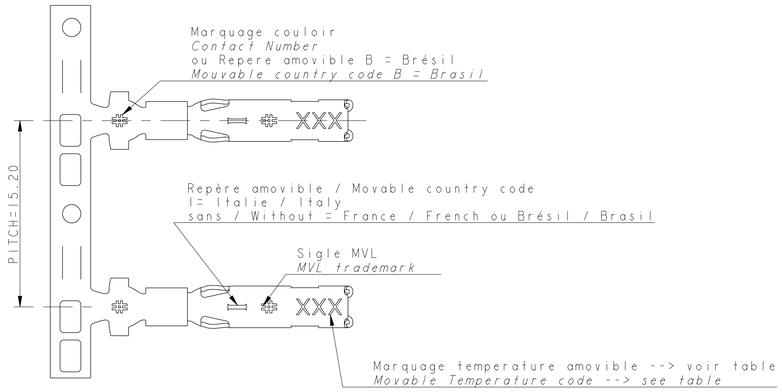

1/2 SECTION L-L

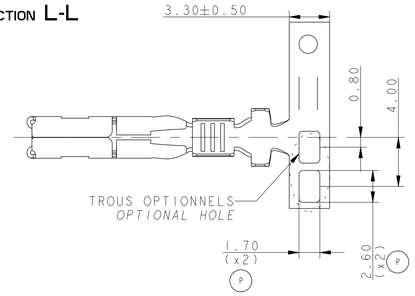

DETAIL A
SCALE 10:1

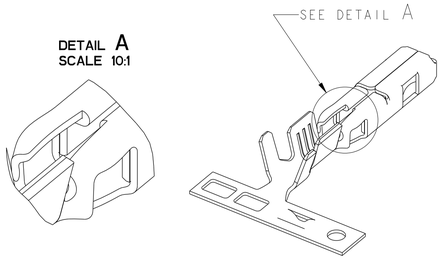

PROTECTION OR / GOLD PLATING						
	Pitch of the strip = 15.20 65 terminals per meter					
Reference	Area	Ni B	Ni C	Sn (µm)	Thickness Au nominal	Thickness Au mini
211 CC 2S X 4 60	B2 (INT) Contact point	1µMIN 2µMAX	0.1µMAX		1.52µ	1.27µ
211 CC 2S X 4 61						
ZONE ET DIMENSIONS VALABLES POUR TOUTES REFERENCES AREA AND DIMENSIONS ARE VALID FOR ALL REFERENCES						

JUF / SWS

SCALE 4:1

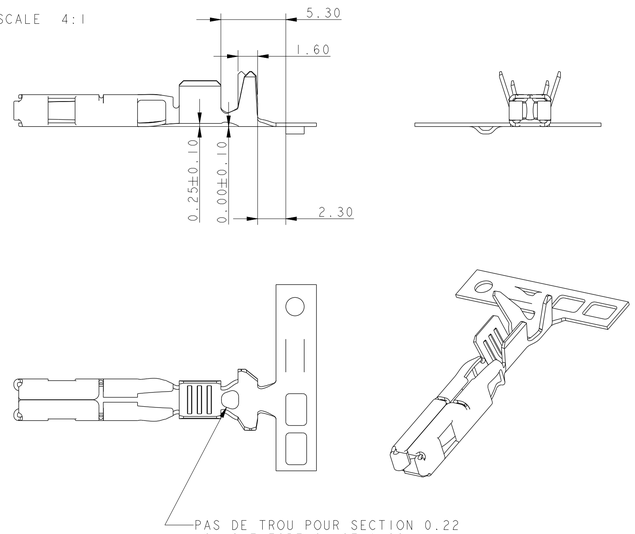

FRETTAGE JUXTAPOSE
SIDE BY SIDE INSULATION

SCALE 4:1

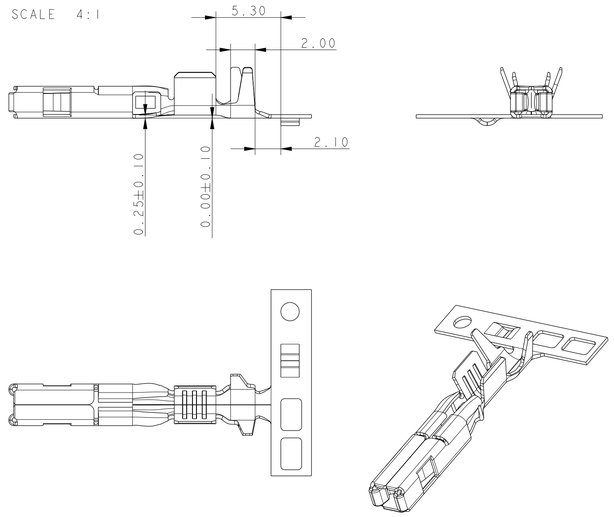

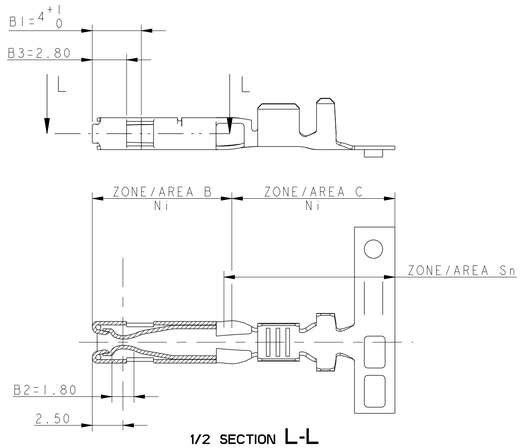

1/2 SECTION L-L

13-01079	SHEET 2	MODIFY CHAMFER 0.35; WIRE: COLUMN L5 ; SYM WIRE PUNCH
		MODIFY CARRER STRIP HOLE; MODIFY Ø INSULATION
		ADD DELPHI P/N
12-00279		
		Add side by side insulation on new crimping range (sheet 3)
ECN11-00144-1	-	-
	-	-
	-	-
	M5-15	Add side by side insulation
	E13-E15	Add optional hole on carrier strip
09 104	-	
	-	
	-	
	-	Part revision level G instead of F
	-	Update transition area shape
ECN-NO. NUMERO ECN	POSITION POSITION	CHANGE DESCRIPTION MODIFICATION

PRODUCT SPEC. SPECIF. PRODUIT: -
PACKAGING SPEC. SPECIF. EMBALAGE: -
APPLICATION SPEC. SPECIF. APPLICATION: -

COPYRIGHT DELPHI CORPORATION AND/OR ITS AFFILIATES. ALL RIGHTS RESERVED. REVISED
THIS DRAWING IS THE PROPERTY OF DELPHI CORPORATION AND CONTAINS DELPHI CONFIDENTIAL INFORMATION. THE REPRODUCTION, DISTRIBUTION AND UTILIZATION OF THIS DOCUMENT OR ITS RELATED CAD MATA DATA, AS WELL AS COMMUNICATION OF ANY CONTENT TO OTHERS, WITHOUT EXPRESS AUTHORIZATION, IS PROHIBITED.
CE PLAN EST LA PROPRIETE DE DELPHI CORPORATION ET CONTIENT DES INFORMATIONS DELPHI CONFIDENTIELLES. LA REPRODUCTION, LA DISTRIBUTION ET L'UTILISATION DE CE DOCUMENT OU DE SES DONNEES MATEMATIQUES CAD, AINSI QUE LA COMMUNICATION DE TOUT CONTENU A AUTRUI, SANS AUTORISATION EXPRESSE, EST INTERDITE.

TOLERANCES TOLERANCES: ±0.2 ±2°
MATERIAL : MATIERE : SEE TABLE
SURFACE FINISH ETAT DE SURFACE: -
COUNTERPART N° CONTRE-PARTIE N°: -
COLOUR : COULEUR : -
TOOL NO. OUTIL N°: -
ECO Loc. Code CODE B.E.: FE
DO NOT MEASURE DRAWING NE PAS PRENDRE DE COTES

	DATE DATE	NAME NOM
CREATED BY CREE PAR	2003-07-23	HERNANDEZ,S
MODIFIED BY MODIF. PAR	2013/10/17	L.DOMERGUE
CHECKED BY VERIF. PAR	2013/10/18	S.LACOTE
APPROVED BY APPR. PAR	2013/10/18	Patrice CAPPE
FILE NAME NOM DE FICHIER	211FT0463	

TITLE DESIGNATION: 15 x 0.8 FEMALE TERMINAL
PROJECT PROJET: SICMA 3 PLUS
ECN NO. NUMERO ECR: FRA-0332
CAT. NO. NUMERO CAT.: -
DOCUMENT UNDER PDS CONTROL NO MODIFICATION ALLOWED OUTSIDE
DOCUMENT GERE SOUS P.D.S. PAS DE MODIFICATION EN DEHORS

DELPHI
DELPHI PACKARD ELECTRICAL/ELECTRONIC ARCHITECTURE
EPERNON, FRANCE
ISO PROJECTION PROJECTION ISO
DIMENSION IN MILLIMETERS DIMENSIONS EN MILLIMETRES
CAD SYSTEM: pro / eng.
DWG SIZE FORMAT: A1
DRAWING NUMBER REF. PLAN: 211FT0463
REV. IND.: P
STATE ETAT: SERIAL RELEASED
PART NUMBER REF. ARTICLE: See Table
REV. IND.: -
APPROVAL LEVEL NIV. D'APPROBATION: -
SHEET FEUILLE: 1 of / sur 3
SCALE ECH.: 1:1

CONTACTS *TERMINALS*		CUIVRE / WIRE										ISOLANT / INSULATION																																		CENTREUR CONNEXION *CONNEXION TOP TERMINAL GUIDING*			
		POINCON *PUNCH*					ENCLUME *ANVIL*					FRETTAGE PAR RECOUVREMENT *INSULATION BARREL WITH OVERLAPING*												FRETTAGE JUXTAPOSE *SIDE BY SIDE INSULATION*												FRETTAGE AVEC JOINT UNITAIRE SUR FIL *INSULATION BARREL WITH SINGLE SEAL*															
												DEPORT *STEP*		POINCON *PUNCH*							ENCLUME ANVIL				DEPORT *STEP*		POINCON *PUNCH*						ENCLUME *ANVIL*				DEPORT *STEP*		POINCON *PUNCH*						ENCLUME *ANVIL*							
REFERENCES *PART-NUMBERS*	SECTION *GAUGE*	C	D	L1	R1	A1	L2	(L3)	L4	L5	R2	D1	D2	A	B	L1	R1	R2	R3	(L6)	A1	L2	(L3)	L4	R4	D1	D2	A	B	L1	R1	A1	L2	(L3)	L4	R2	D1	D2	A	B	L1	R1	A1	L2	(L3)	L4	R2	D1	D2	A	B	L1	R1	A1	L2	(L3)	L4	R2	LARGEUR *WIDTH* (F)	EPAISSEUR *THICKNESS* (G)	HAUTEUR *HEIGHT* (H)	COURSE *DEPLACEMENT* (I)
211CC2S0150P	0.22mm²	3.50	8	1.40	0.37	2°	1.40	0.14	0.16	3.22	1.03	0.35	0.00	3.00	8.00	1.99	0.76	0.59	0.54	0.71	2°	1.99	0.15	0.33	1.17																																							
211CC2S0160P																																																														
211CC2S0460P																																																														
211CC2S0161P																																						0.35	-0.25	3.50	7.80	3.55	1.77	4°	3.55	0.24	0.89	1.77														
211CC2S1150P	0.35mm² to 0.70mm²	3.50	7.90	1.60	0.43	2°	1.60	0.20	0.21	3.46 (P)	0.96	0.35	0.00	3.60	8.10	2.50	0.93	0.50	0.65	0.87	4°	2.50	0.21	0.42	1.50																																									
211CC2S1160P																																																														
211CC2S1460P																																																														
211CC2S1190P																																																														
211CC2S1161P																																						0.35	-0.25	3.50	7.80	3.55	1.77	4°	3.55	0.24	0.89	1.77														
211CC2S1461P																																																														
F562500																										0.35	0.00	4.00	8.00	2.10	1.05	4°	2.10	0.18	0.36	1.26																															
F962500																																																														
211CC2S4150P	0.75mm² to 1.30mm²	2.93	7.65	1.86	0.50	2°	1.86	0.23	0.24	3.68 (P)	1.16	0.35	0.00	3.00	8.00	2.95	1.10	0.59	0.77	1.02	4°	2.95	0.25	0.49	1.77																																								
211CC2S4160P																																																														
211CC2S4460P																																																														
211CC2S4190P																																																														
211CC2S4161P																																						0.35	-0.35	4.00	8.00	4.10	2.05	4°	4.10	0.27	1.03	2.05														
211CC2S2150P	1.35mm² to 2.00mm²	3.80	7.20	2.25	0.61	4°	2.25	0.28	0.30	3.80 (P)	1.35	0.35	0.00	3.80	8.80	3.15	1.17	0.63	0.82	1.09	4°	3.15	0.26	0.53	1.89																																								
211CC2S2160P																																																														
211CC2S2460P																																																														
211CC2S2190P																																																														
211CC2S2161P																																						0.35	-0.35	4.00	8.00	4.10	2.05	4°	4.10	0.27	1.03	2.05														

VUE F
F VIEW

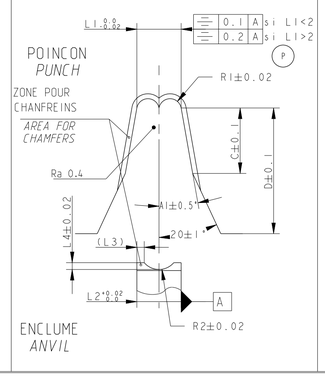

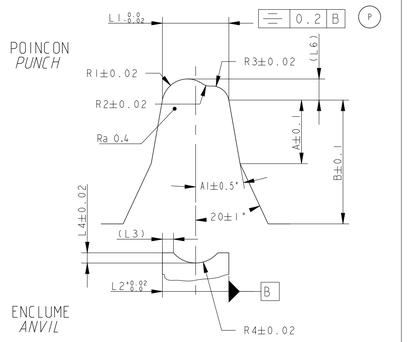

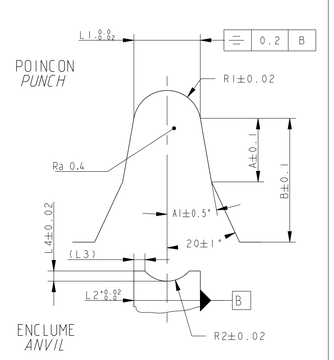

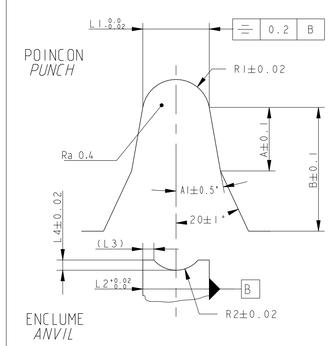

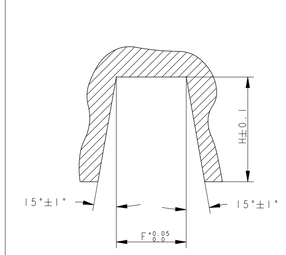

CENTREUR CONNEXION
TOP TERMINAL GUILDING

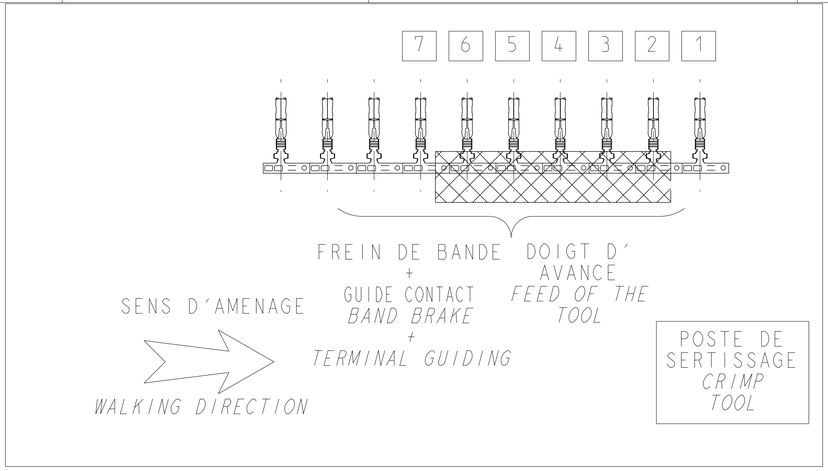

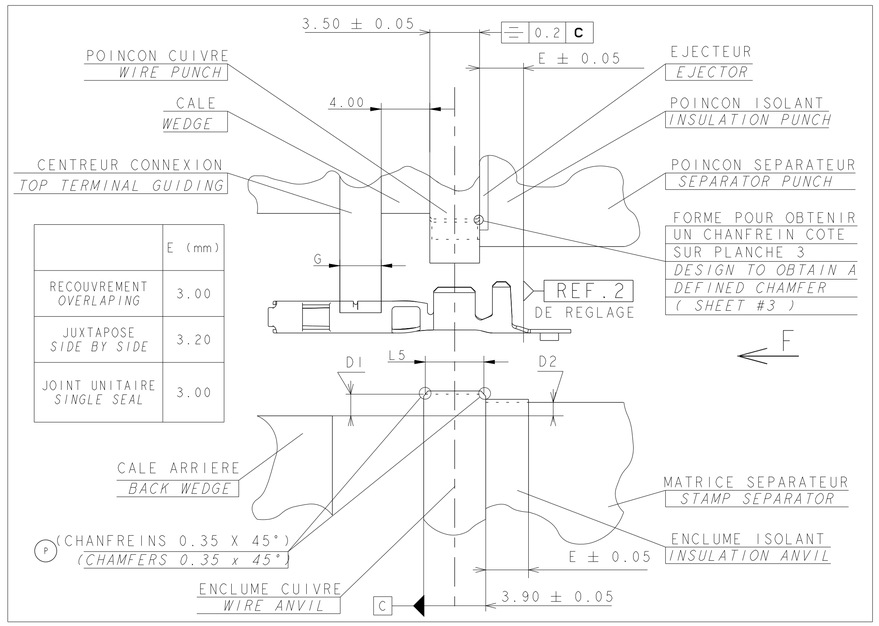

	E (mm)
RECOUVREMENT *OVERLAPING*	3.00
JUXTAPOSE *SIDE BY SIDE*	3.20
JOINT UNITAIRE *SINGLE SEAL*	3.00

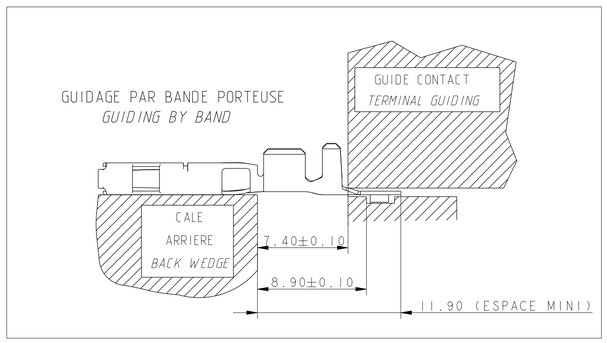

* (VALEUR) UNIQUEMENT POUR INORMATION
(VALUE) FOR INFORMATION ONLY

-	-	
	-	
	-	
	-	
	-	See sheet 1

ECN-NO. *NUMERO ECN*	POSITION *POSITION*	CHANGE DESCRIPTION *MODIFICATION*
-	-	-

PRODUCT SPEC. *SPECIF. PRODUIT* -	PACKAGING SPEC. *SPECIF. EMBALAGE* -	APPLICATION SPEC. *SPECIF. APPLICATION* -	SURFACE FINISH *ETAT DE SURFACE* -
TOLERANCES *TOLERANCES* ±0.2 ±2°	MATERIAL : *MATIERE :* SEE TABLE		
CONTEXPART № *CONTE PARTIE №* -	COLOUR : *COULEUR :* -		
DO NOT MEASURE DRAWING *NE PAS PRENDRE DE COTES*	TOOL NO. *OUTIL №* -	ECO Loc. Code *CODE B.E.* FE	

COPYRIGHT DELPHI CORPORATION AND/OR ITS AFFILIATES. ALL RIGHTS RESERVED. REVISED
THIS DRAWING IS THE PROPERTY OF DELPHI CORPORATION AND CONTAINS DELPHI CONFIDENTIAL INFORMATION. THE REPRODUCTION, DISTRIBUTION AND UTILIZATION OF THIS DOCUMENT OR ITS RELATED CAD DATA DATA, AS WELL AS COMMUNICATION OF ANY CONTENT TO OTHERS, WITHOUT EXPRESS AUTHORIZATION, IS PROHIBITED.
CE PLAN EST LA PROPRIETE DE DELPHI CORPORATION ET CONTIENT DES INFORMATIONS DELPHI CONFIDENTIELLES. LA REPRODUCTION, LA DISTRIBUTION ET L'UTILISATION DE CE DOCUMENT OU DE SES DONNEES MATERIELLES CAD, AINSI QUE LA COMMUNICATION DE CE TEXT CONTENU A AUTRUI, SANS AUTORISATION EXPRESSE, EST INTERDITE.

DELPHI PACKARD ELECTRICAL/ELECTRONIC ARCHITECTURE
EPERNON, FRANCE

ISO PROJECTION *PROJECTION ISO.* — DIMENSION IN MILLIMETERS *DIMENSIONS EN MILLIMETRES*

	DATE *DATE*	NAME *NOM*
CREATED BY *CREE PAR*	2003-07-23	HERNANDEZ.S
MODIFIED BY *MODIF. PAR*	2013/10/17	L DOMERGUE
CHECKED BY *VERIF. PAR*	2013/10/18	S LACOTE
APPROVED BY *APPR. PAR*	2013/10/18	Pierre CAPPE

TITLE *DESIGNATION*: 15 x 0.8 FEMALE TERMINAL

PROJECT *PROJET*: SICMA 3 PLUS

ESR NO *NUMERO ESR* FRA-0332 — CAT. NO *NUMERO CAT.* -

DOCUMENT UNDER PDS CONTROL *DOCUMENT GERE SOUS P.D.S.*
NO MODIFICATION ALLOWED OUTSIDE *PAS DE MODIFICATION EN DEHORS*

DRAWING NUMBER *REF. PLAN* — REV. *IND.*: **211FT0463** — **P**

STATE *ETAT*: **SERIAL RELEASED**

PART NUMBER *REF. ARTICLE*: **See Table** — REV. *IND.*: -

CAD SYSTEM *FORMAT*: pro / eng. — A1

UNIT SYZE: MM

APPROVAL LEVEL *NIV. D'APPROBATION*: -

SHEET *FEUILLE*: 2 of / sur 3

SCALE *ECH.*: 1:1

FILE NAME *NOM DE FICHIER*: 211FT0463

EUR C04.112 E29