NOTA	SPECIFICATION
1	DOSSIER DE PRECONISATION N°PU 009 *USER MANUAL N°PU 009*
2	WIRE ISOLATIONS Ø *WIRE INSULATION Ø* *MAXI = 3.0* *MINI = 1.2*
3	MASSE DU PRODUIT LIVRABLE : 7g *DELIVERY CONNECTOR WEIGHT: 7g*
4	CLIPS/LANGUETTES FORCE D´ACC. DES CONNECTEURS = 75N MAXI *FEMALE/MALE CONNECTOR MATING FORCE = 75N MAXI*
5	COMPATIBLE AVEC DESSIN INTERFACE 96 019 729 99 *COMPATIBLE WITH INTERFACE DRAWING 96 019 729 99*
6	CODEUR BLANC REPRESENTE *WHITE CODING DRAWN*

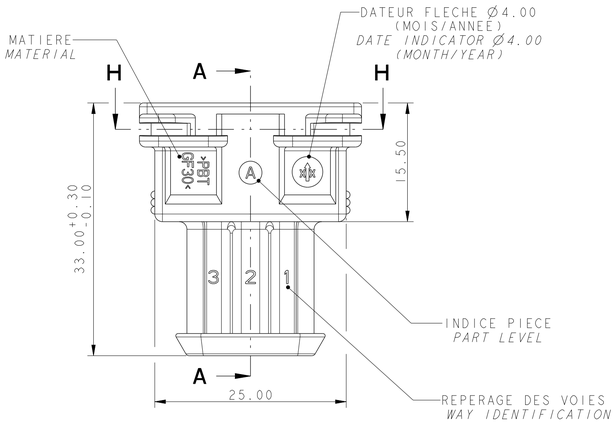

1/2 SECTION D-D

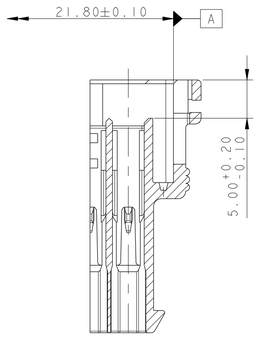

SECTION A-A

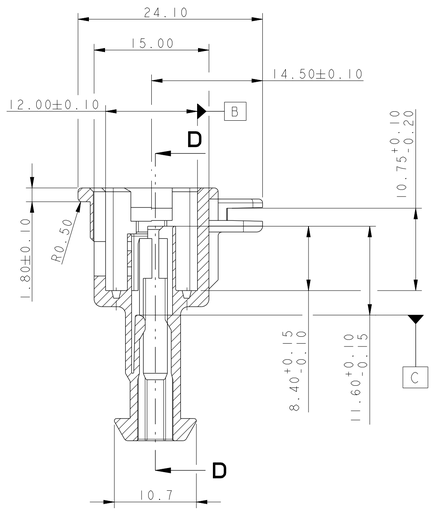

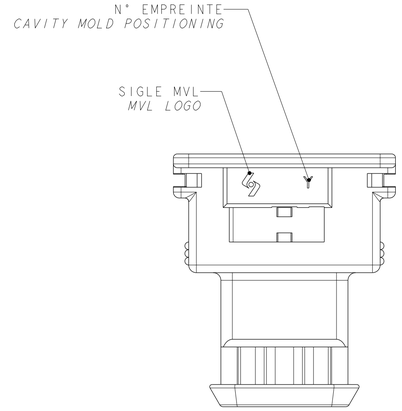

1/2 SECTION H-H

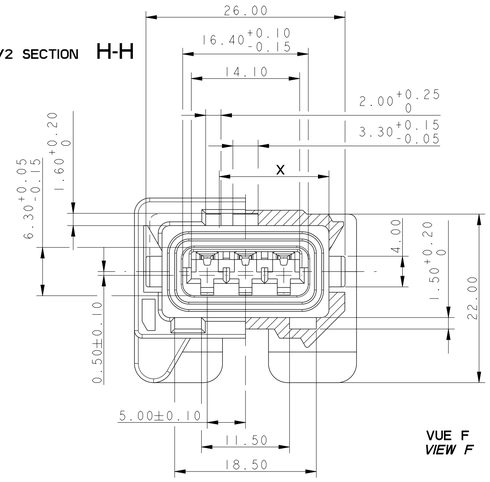

VUE F
VIEW F

ETAT DE LIVRAISON
DELIVERY STATE

SECTION A-A

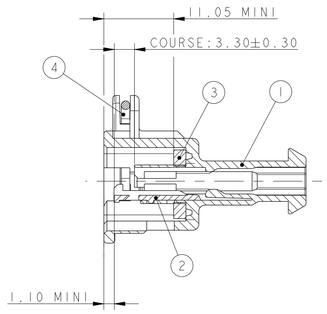

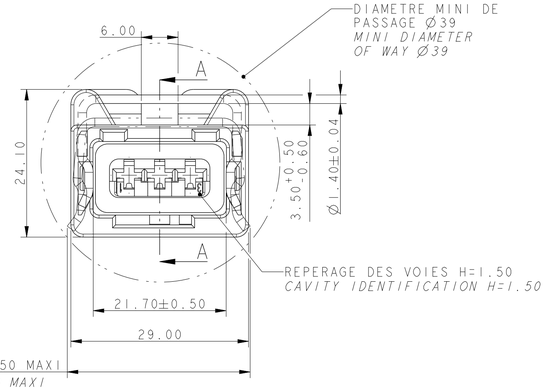

DIMENSION DE MONTAGE DU RESSORT: 32.50 MAXI
MOUNTING DIMENSIONS OF SPRING: 32.50 MAXI

REP.	DESIGNATION *DESCRIPTION*	REF. DELPHI *DELPHI'S REF.*	MATIERE *MATERIAL*	COULEUR *COLOUR*
1	PORTE-CLIPS *FEMALE HOUSING*	240 I 9 005	PBT 30% FV	BLANC *WHITE*
		240 I 8 005		GRIS *GREY*
		240 I 6 005		BLEU *BLUE*
		240 I 5 005		VERT *GREEN*
		240 I I 005		MARRON *BROWN*
		240 I 0 005		NOIR *BLACK*
2	GRILLE *GRID*	240 M 7 002	PBT 0% FV	VIOLET *PURPLE*
3	JOINT PLAT *FLAT SEAL*	240 X 0004	SILICONE DURETE 40 Sh ±5	ROUGE *RED*
4	*RESSORT* SPRING	240 X 0006	Z I2 CN I8	-

	4.90	6.70	13.30	8.50	15.10	VUE F *VIEW F* TOLERANCE +0/-0.10
NOIR *BLACK*	MARRON *BROWN*	VERT *GREEN*	BLEU *BLUE*	GRIS *GREY*	BLANC *WHITE*	COULEUR *COLOUR*
240 PC 03 S 0 005	240 PC 03 S I 005	240 PC 03 S 5 005	240 PC 03 S 6 005	240 PC 03 S 8 005	240 PC 03 S 9 005	N°D´ORIGINE *LEGACY PART*
I0775244	33500335	33500336	I0775754	33500337	I5364041	REF. DELPHI *DELPHI REF.*

3D VIEW

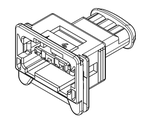

ECHELLE 1:1
SCALE 1:1

I4-09644	-	-
	-	-
	-	-
	A 9-I6	DELPHI P/N ADDED
	-	REDRAWN IN PDS, RE-WORKED TO NEW STANDARDS

ECN NO. / *NUMERO ECN* — POSITION / *POSITION* — CHANGE DESCRIPTION / *MODIFICATION*

PRODUCT SPEC. / *SPECIF. PRODUIT*: - — PACKAGING SPEC. / *SPECIF. EMBALLAGE*: - — APPLICATION SPEC. / *SPECIF. APPLICATION*: -

COPYRIGHT DELPHI CORPORATION AND/OR ITS AFFILIATES. ALL RIGHTS RESERVED. REVISED
THIS DRAWING IS THE PROPERTY OF DELPHI CORPORATION AND CONTAINS DELPHI CONFIDENTIAL INFORMATION. THE REPRODUCTION, DISTRIBUTION AND UTILIZATION OF THIS DOCUMENT OR ITS RELATED CAD WITH DATA, AS WELL AS COMMUNICATION OF ANY CONTENT TO OTHERS, WITHOUT EXPRESS AUTHORIZATION, IS PROHIBITED.
CE PLAN EST LA PROPRIETE DE DELPHI CORPORATION ET CONTIENT DES INFORMATIONS DELPHI CONFIDENTIELLES. LA REPRODUCTION, LA DISTRIBUTION ET L'UTILISATION DE CE DOCUMENT OU DE SES DONNEES MECANIQUES CAD, AINSI QUE LA COMMUNICATION DE TOUT CONTENU A AUTRUI, SANS AUTORISATION EXPRESSE, EST INTERDITE.

TOLERANCES / *TOLERANCES*: ±0.2 ±2° — MATERIAL / *MATIERE*: SEE TABLE — SURFACE FINISH / *ETAT DE SURFACE*: -

COUNTERPART N° / *CONTRE-PARTIE N°*: - — COLOUR / *COULEUR*: SEE TABLE

DO NOT MEASURE DRAWING / *NE PAS PRENDRE DE COTES*: - — TOOL NO. / *OUTIL N°*: - — ECO Loc. Code / *CODE B.E.*: FE

DELPHI — DELPHI PACKARD ELECTRICAL/ELECTRONIC ARCHITECTURE, EPERNON, FRANCE

ISO PROJECTION / *PROJECTION ISO* — DIMENSION IN MILLIMETERS / *DIMENSIONS EN MILLIMETRES*

	DATE	NAME / NOM
CREATED BY / *CREE PAR*	199407/20	PR
MODIFIED BY / *MODIF. PAR*	2014/10/01	F FAURIE
CHECKED BY / *VERIF. PAR*	2014/10/02	S LACOTE
APPROVED BY / *APPR. PAR*	2014/10/02	Pascal MENARD

TITLE / *DESIGNATION*: 3W FEMALE DCS SEALED CONNECTOR

PROJECT / *PROJET*: 3W FEMALE DCS SEALED CONNECTOR

ESR NO. / *NUMERO ESR*: FRA-0314 — CAT. NO. / *NUMERO CAT.*: -

DOCUMENT UNDER PDS CONTROL / *DOCUMENT GERE SOUS P.D.S.* — NO MODIFICATION ALLOWED OUTSIDE / *PAS DE MODIFICATION EN DEHORS*

FILE NAME / *NOM DE FICHIER*: 240FT0036

DRAWING NUMBER / *REF. PLAN*: 240FT0036 — REV. / *IND.*: B

STATE / *ETAT*: SERIAL RELEASED

PART NUMBER / *REF. ARTICLE*: See Table — REV. / *IND.*: -

CAD SYSTEM: pro / eng. — DWG SIZE / *FORMAT*: A1 — APPROVAL LEVEL / *NIV. D'APPROBATION*: - — SHEET / *FEUILLE*: 1 of 1 — SCALE / *ECH.*: 2:1

EUR C04 112 F29