REV.	DATE	DESCRIPTION
NC	01/18/05	INITIAL RELEASE

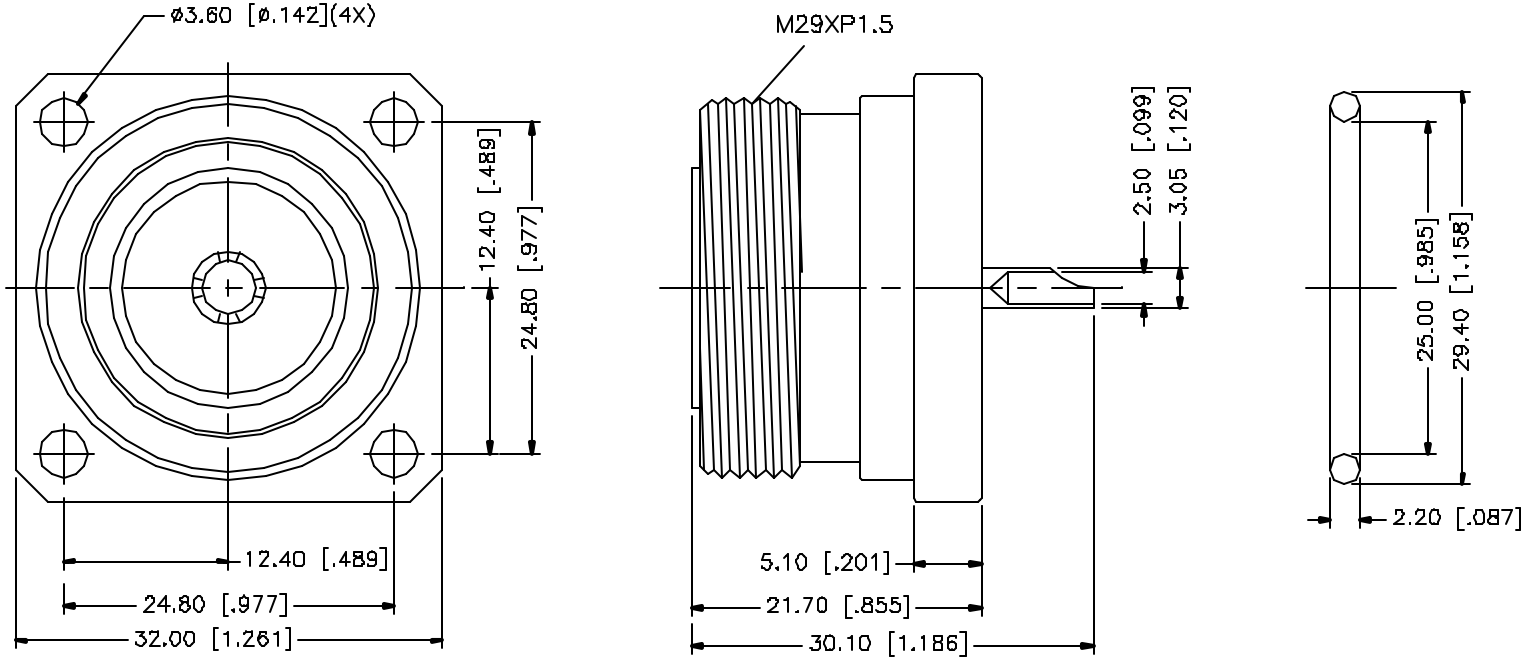

NOTES: FINISH (PLATING THICKNESS IN MICRO-INCHES)

1. SILVER PL. 200 MIN. THICK OVER COPPER STRIKE
2. BRASS PER QQ-B-626
3. BERYLLIUM COPPER PER QQ-C-530.
4. TEFLON MIL-P-19468

	DESCRIPTION	MATERIAL	FINISH	QTY
8				
7				
6	GASKET	N.B.R.	BLACK	1
5	COVER	PE	BLUE	1
4	OUTER CONTACT	BRASS	NEXCOTE	1
3	CONTACT PIN	BER. COPPER	GOLD	1
2	INSULATOR	TEFLON	NATURAL	1
1	BODY	BRASS	NEXCOTE	1

UNLESS OTHERWISE SPECIFIED DIMENSIONS ARE IN MILLIMETERS. DIMENSIONS IN [ ] ARE IN INCHES AND FOR CUSTOMER REFERENCE ONLY.

UNLESS OTHERWISE SPECIFIED TOLERANCES FOR MILLIMETERS ARE:
0.5 – 8mm ± 0.20mm
8 – 30mm ± 0.40mm
30 – 120mm ± 0.50mm

UNLESS OTHERWISE SPECIFIED TOLERANCES FOR INCHES ARE:
.020 – .315 = ± 0.007"
.315 – 1.180 = ± 0.015"
1.180 – 4.724 = ± 0.020"

DO NOT SCALE DRAWING

APPROVALS		DATE
DRAWN	G.R.S.	01/18/05
CHECKED		
ISSUED		
SHEET	1 OF 1	

CAD FILE C:/272/242130-10.DWG

Amphenol Connex

PART DESCRIPTION
7/16 PANEL RECEPTACLE JACK
(O-RING SEAL)

PART NO. 272130-10

DWG. NO.	REV.	SIZE	SCALE
272130-10.DWG	NC	A	NA