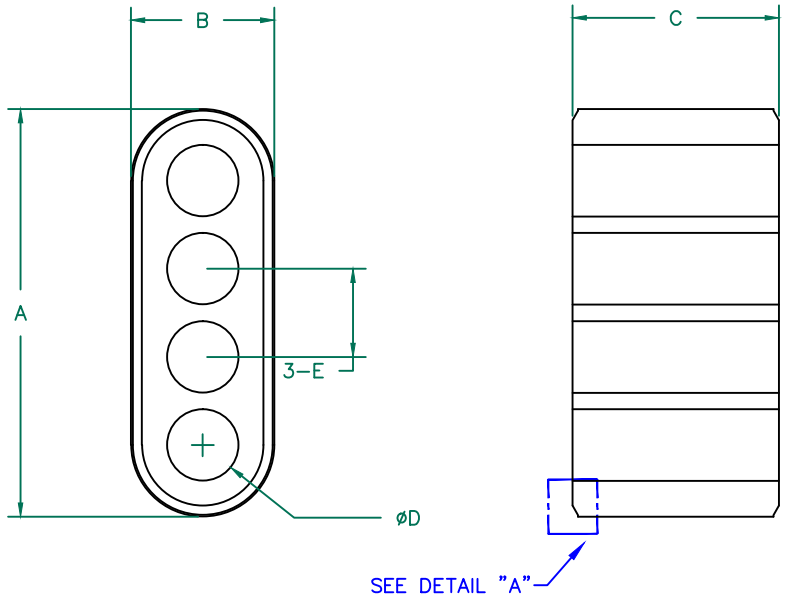

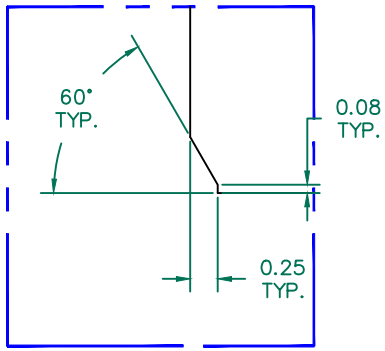

DETAIL "A"
SCALE: 15 : 1

SCALE DRAWING 1:1

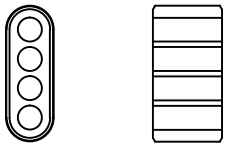

28N0740–000

ELECTRICAL TESTING

TEST	NET Z	NET Z
# TURNS	1 LOOP	1 LOOP
AWG	24	24
FREQUENCY	25 MHz	100 MHz
NOMINAL	56 Ω	86 Ω
MINIMUM	–	68 Ω

NOTES:

1. Cosmetic specification refer to WI–QA–015.
2. TEST Z WITH ONE TURN PASS THROUGH 1ST HOLE.
3. PARTS TO BE TUMBLED FOR REMOVE SHARP EDGES.

FERRITE CORE DIMENSIONS (SPEC):

A	18.80 [.740]	±	0.30 [.012]
B	6.60 [.260]	±	0.30 [.012]
C	9.53 [.375]	±	0.30 [.012]
D	3.30 [.130]	±	0.20 [.008]
E	4.06 [.160]		Ref.

DIMENSIONS ARE IN mm [INCHES].

REV	DESCRIPTION	DATE	INT
A	NEW RELEASE	06/20/14	Jcai

This print is the property of Laird Tech. and is loaned in confidence subject to return upon request and with the understanding that no copies shall be made without the written consent of Laird Tech. All rights to design or invention are reserved.

Laird

PROJECT/PART NUMBER:	REV	PART TYPE:	DRAWN BY:
28N0740–000	A	BALUN	Jcai

DATE:	SCALE:	MATERIAL:
03/15/2019	NTS	FERRITE
CAD # 28N0740–000–A	TOOL # 3:1	