2EB0650P Assembly Drawing (Top)

V1.0, 22-Jul-2011

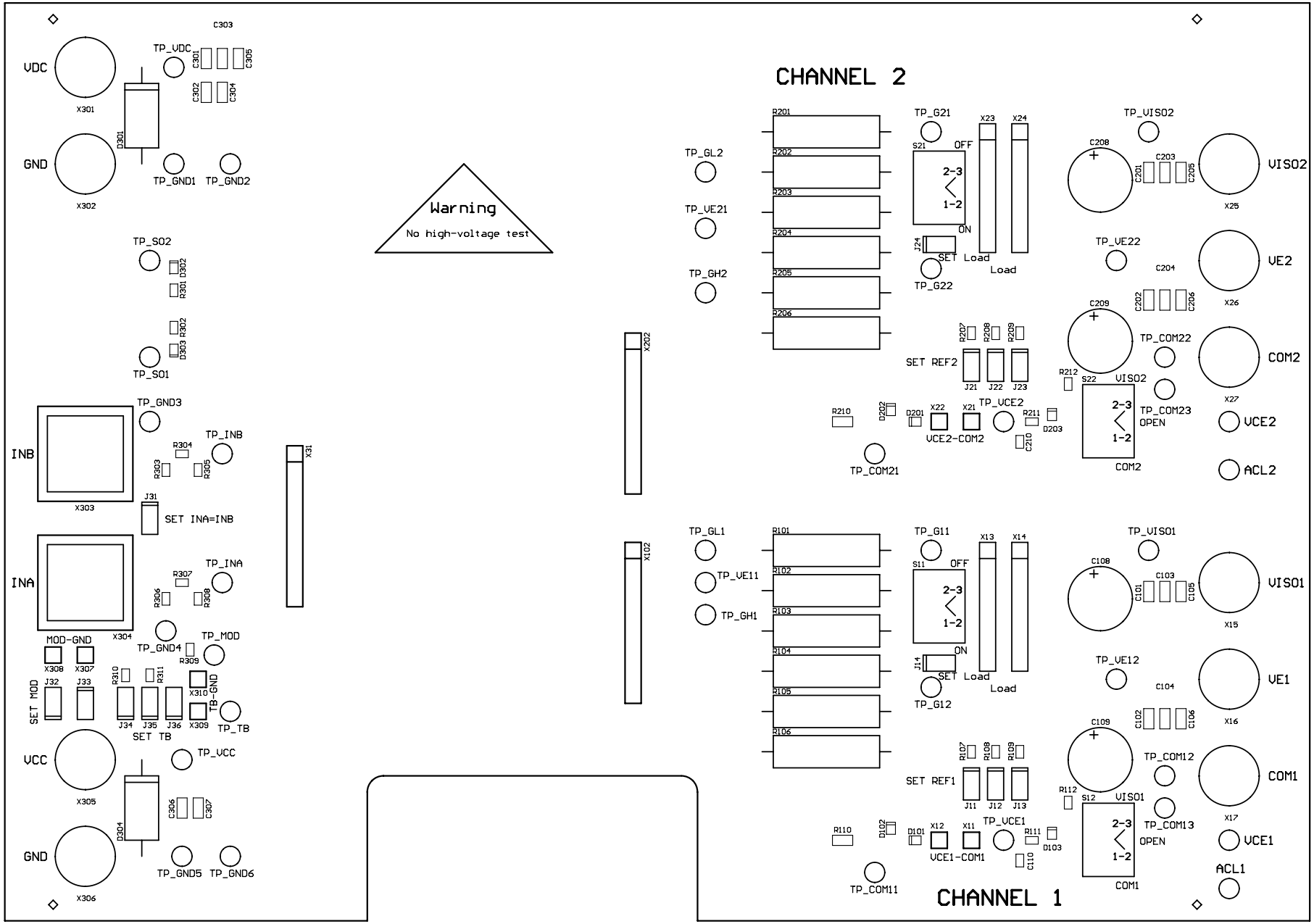

Copyright by CT-Concept Technologie AG Switzerland, www.IGBT-Driver.com

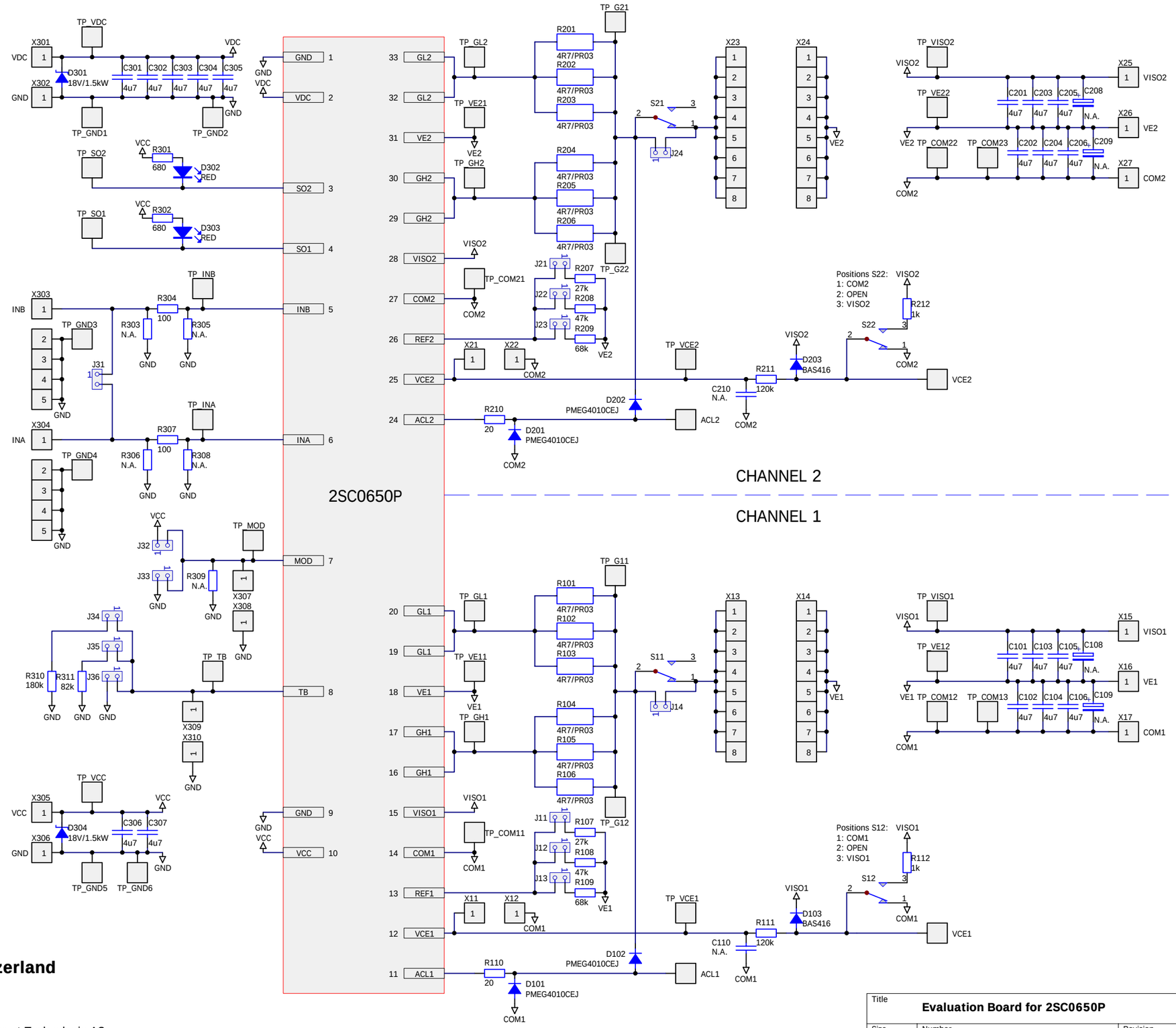

WARNING

No high-voltage test should be performed with this evaluation board

N.A. : Not Assembled

CT-Concept Technologie AG, Switzerland
www.igbt-driver.com

This document contains intellectual property of CT-Concept Technologie AG, CH-2504 Biel-Bienne (Switzerland).

Title	**Evaluation Board for 2SC0650P**	
Size: A3	Number: **2EB0650P**	Revision: V1.0
Date: 8-Jul-2011	Sheet of 1 / 2	
File: S:\Evaluation boards\2EB0650P\CT-234-X Daughter adapter.ddb	Drawn By: DR	