CODINGS

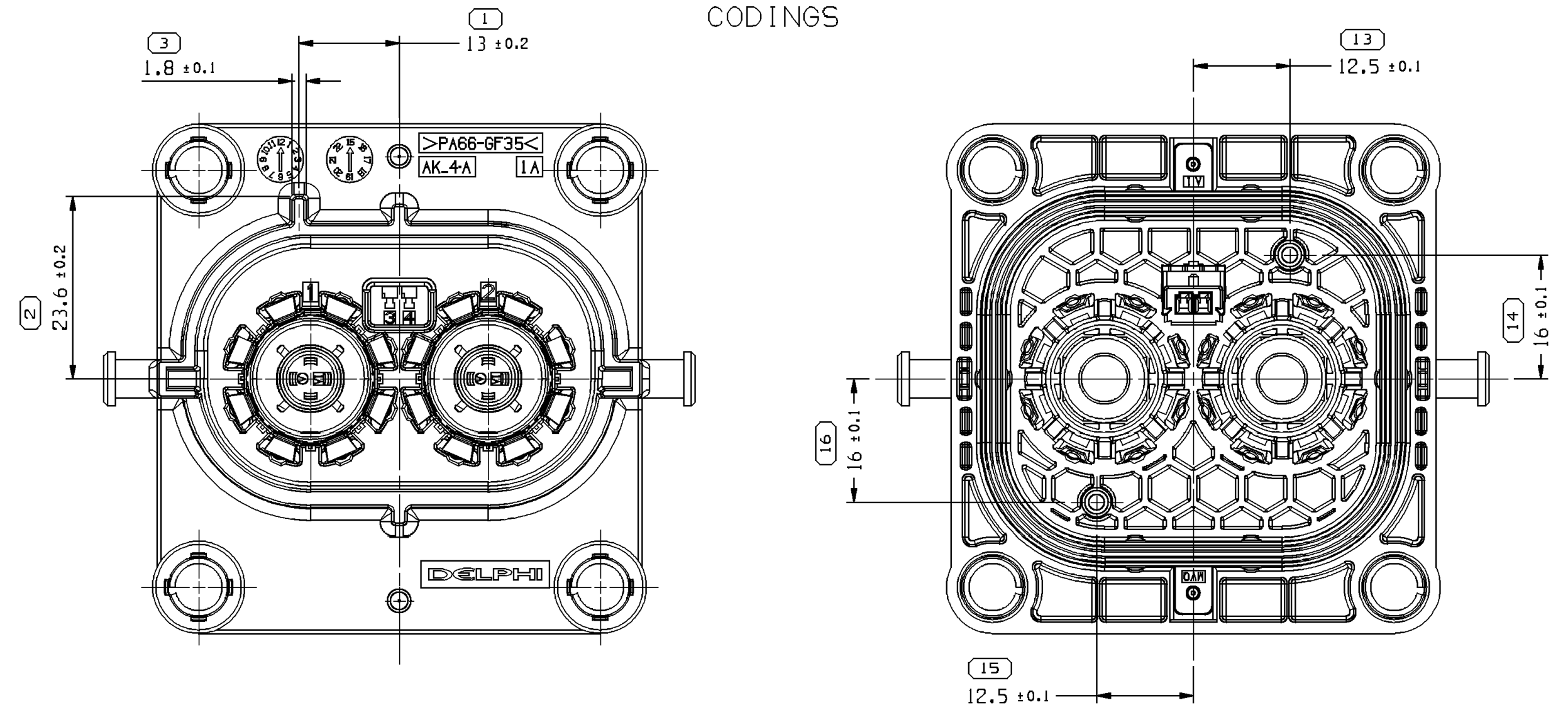

(3) 1.8 ±0.1
(1) 13 ±0.2
(2) 23.6 ±0.2
(13) 12.5 ±0.1
(14) 16 ±0.1
(16) 16 ±0.1
(15) 12.5 ±0.1
>PA66-GF35<
AK_4-A
1A
1
2
3
4
DELPHI

CODE A

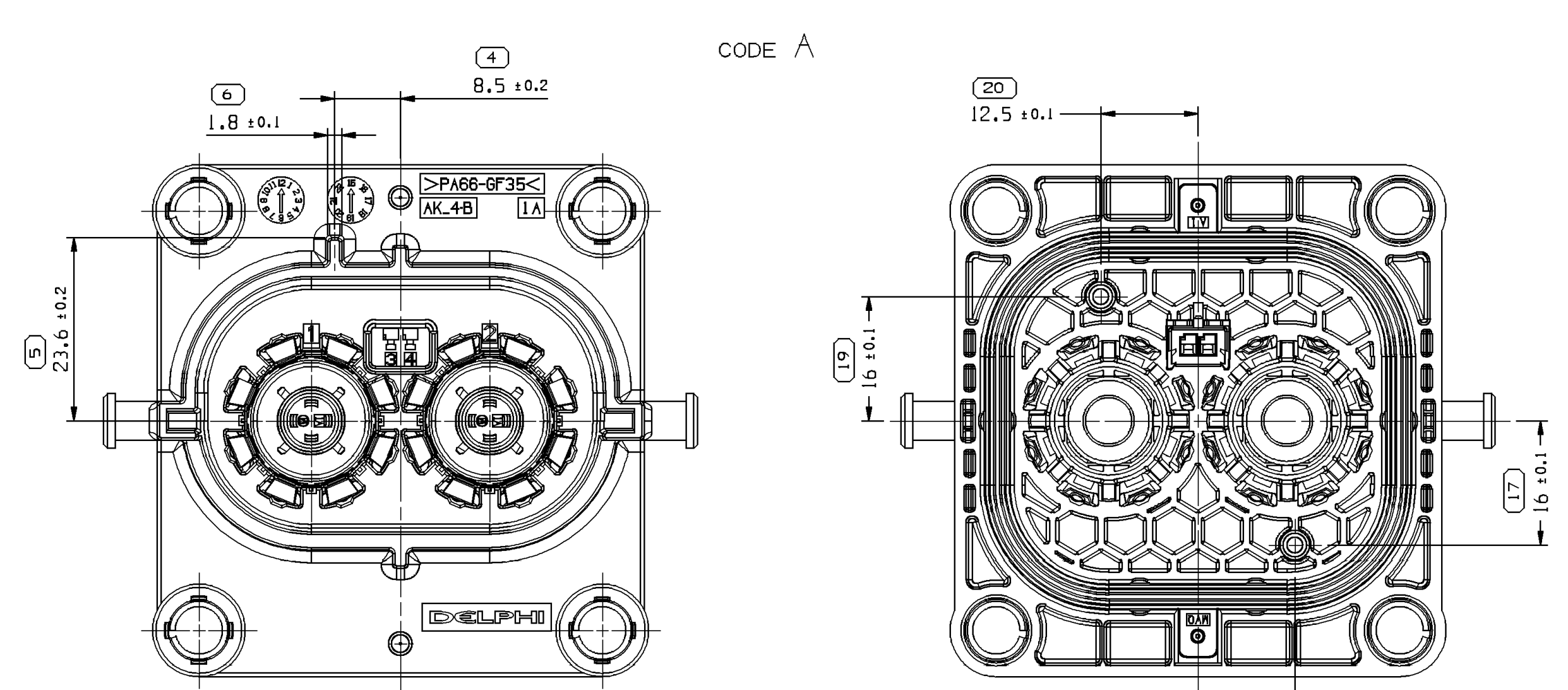

(6) 1.8 ±0.1
(4) 8.5 ±0.2
(5) 23.6 ±0.2
(20) 12.5 ±0.1
(19) 16 ±0.1
(17) 16 ±0.1
(18) 12.5 ±0.1
>PA66-GF35<
AK_4-B
1A
DELPHI

CODE B
SAME AS CODE A
EXCEPT AS SHOWN

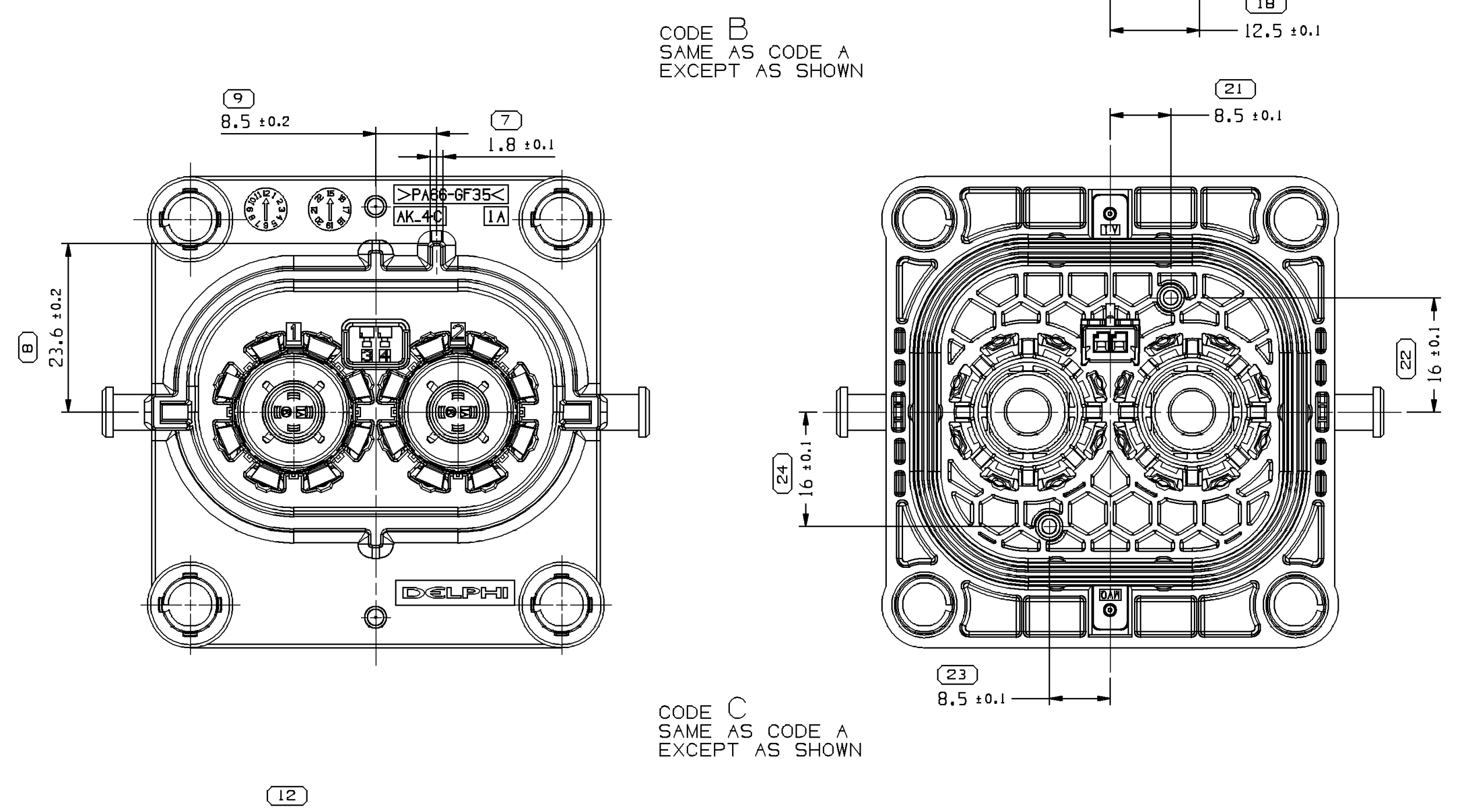

(9) 8.5 ±0.2
(7) 1.8 ±0.1
(8) 23.6 ±0.2
(21) 8.5 ±0.1
(22) 16 ±0.1
(24) 16 ±0.1
(23) 8.5 ±0.1
>PA66-GF35<
AK_4-C
1A
DELPHI

CODE C
SAME AS CODE A
EXCEPT AS SHOWN

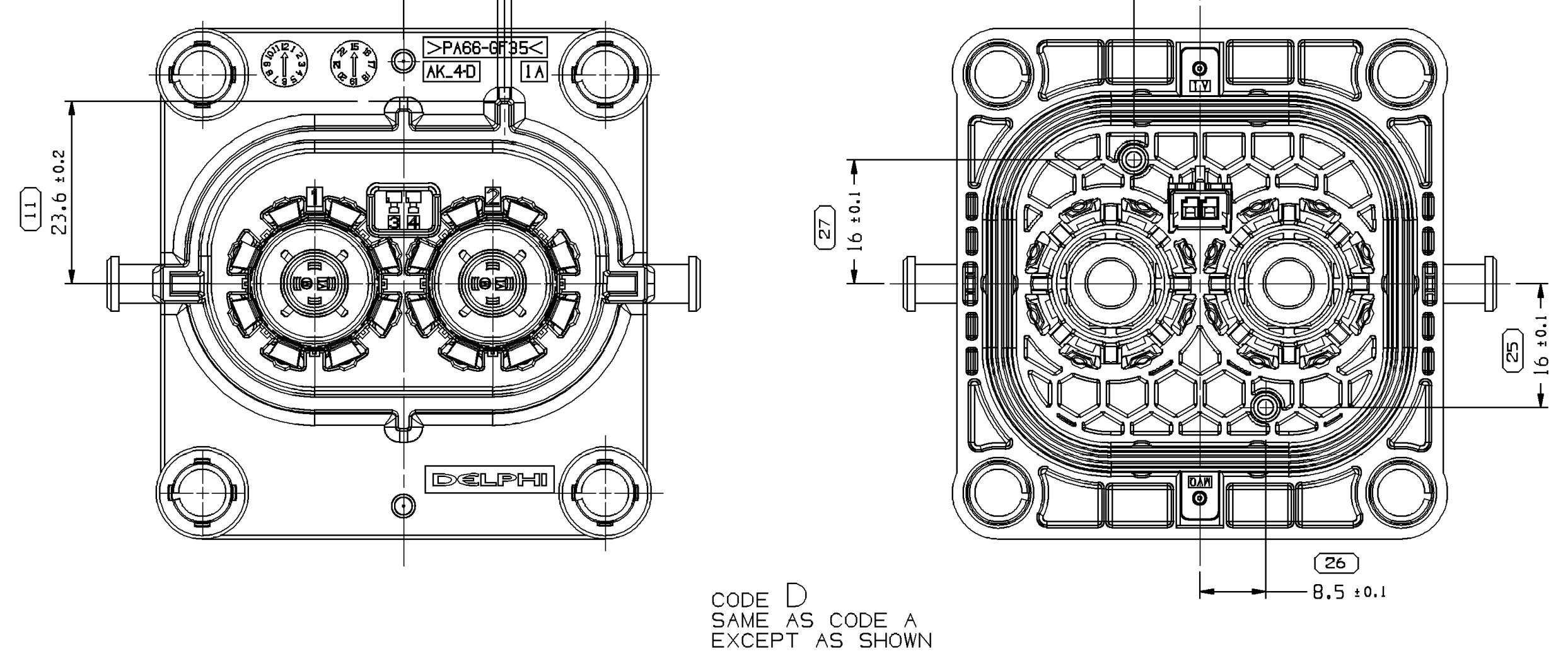

(12) 13 ±0.2
(10) 1.8 ±0.1
(11) 23.6 ±0.2
(28) 8.5 ±0.1
(27) 16 ±0.1
(25) 16 ±0.1
(26) 8.5 ±0.1
>PA66-GF35<
AK_4-D
1A
DELPHI

CODE D
SAME AS CODE A
EXCEPT AS SHOWN

CODING A REPRESENTED

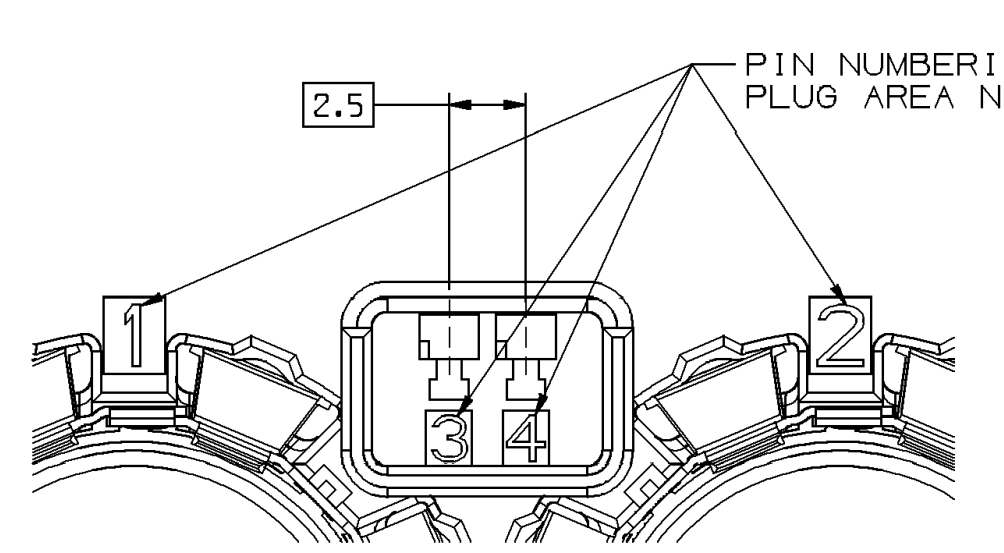

2.5
PIN NUMBERING IN PLUG AREA NOT RAISED
1
2
3
4

DETAIL K
SCALE 5:1

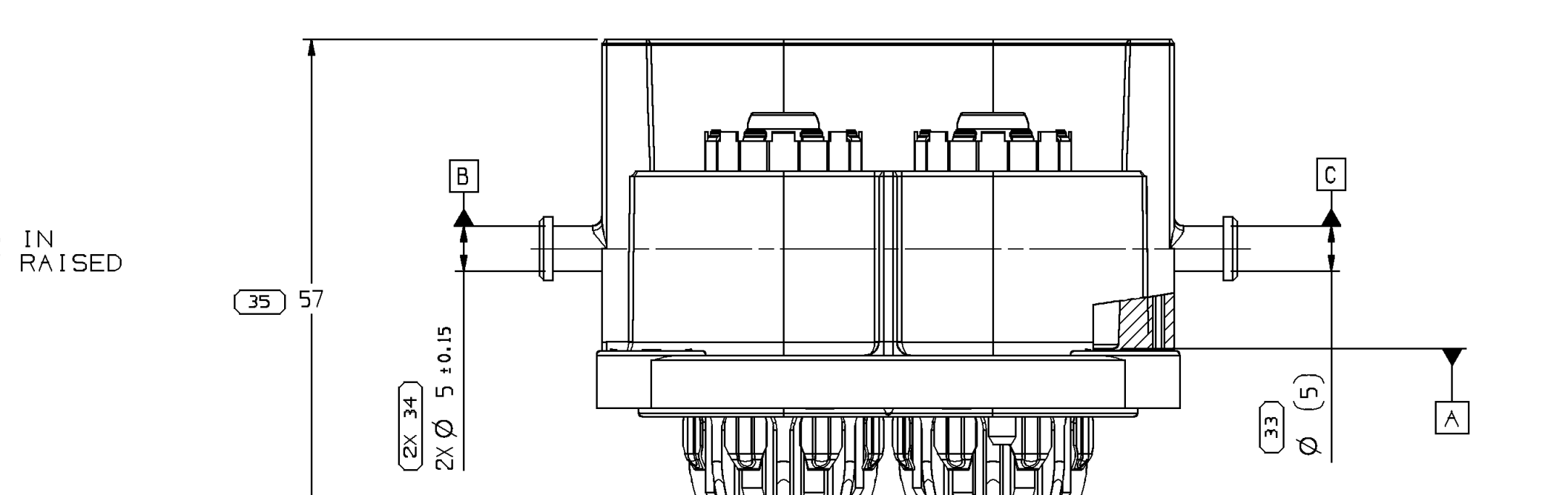

(35) 57
B
C
A
(2X 34) 2X Ø 5 ±0.15
(33) Ø (5)

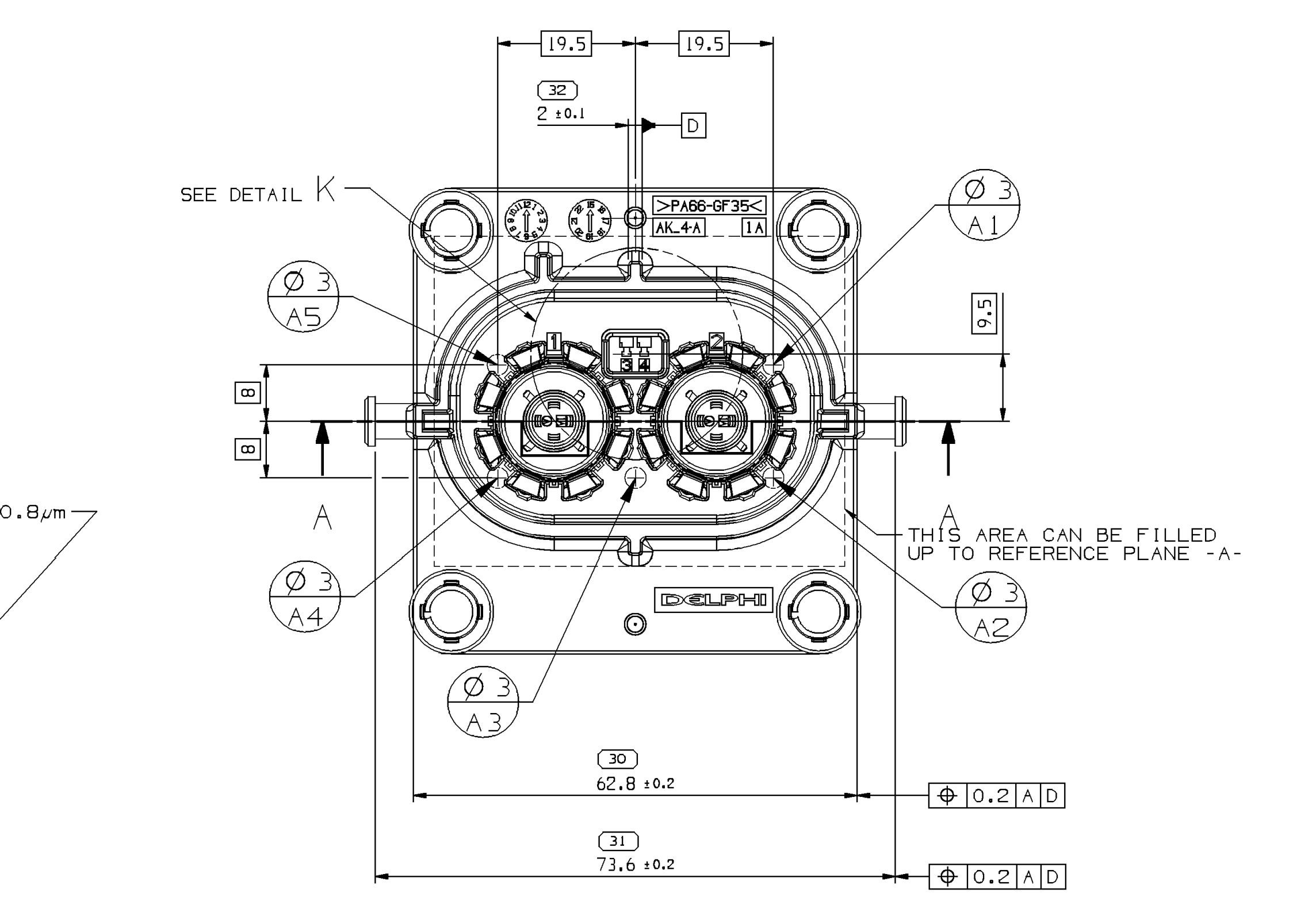

19.5
19.5
(32) 2 ±0.1
D
SEE DETAIL K
Ø 3 A1
Ø 3 A5
Ø 3 A4
Ø 3 A3
Ø 3 A2
9.5
8
8
A
A
THIS AREA CAN BE FILLED UP TO REFERENCE PLANE -A-
>PA66-GF35<
AK_4-A
1A
DELPHI
(30) 62.8 ±0.2
⊕ 0.2 A D
(31) 73.6 ±0.2
⊕ 0.2 A D

(29)
IN THIS AREA SEALING SURFACE AROUND, MAX. Ra=0.8μm
AROUND IN THIS AREA NO BURR, TOOL PARTING,
SHRINKAGE, CAVITIES AND GATE MARK PERMITTED

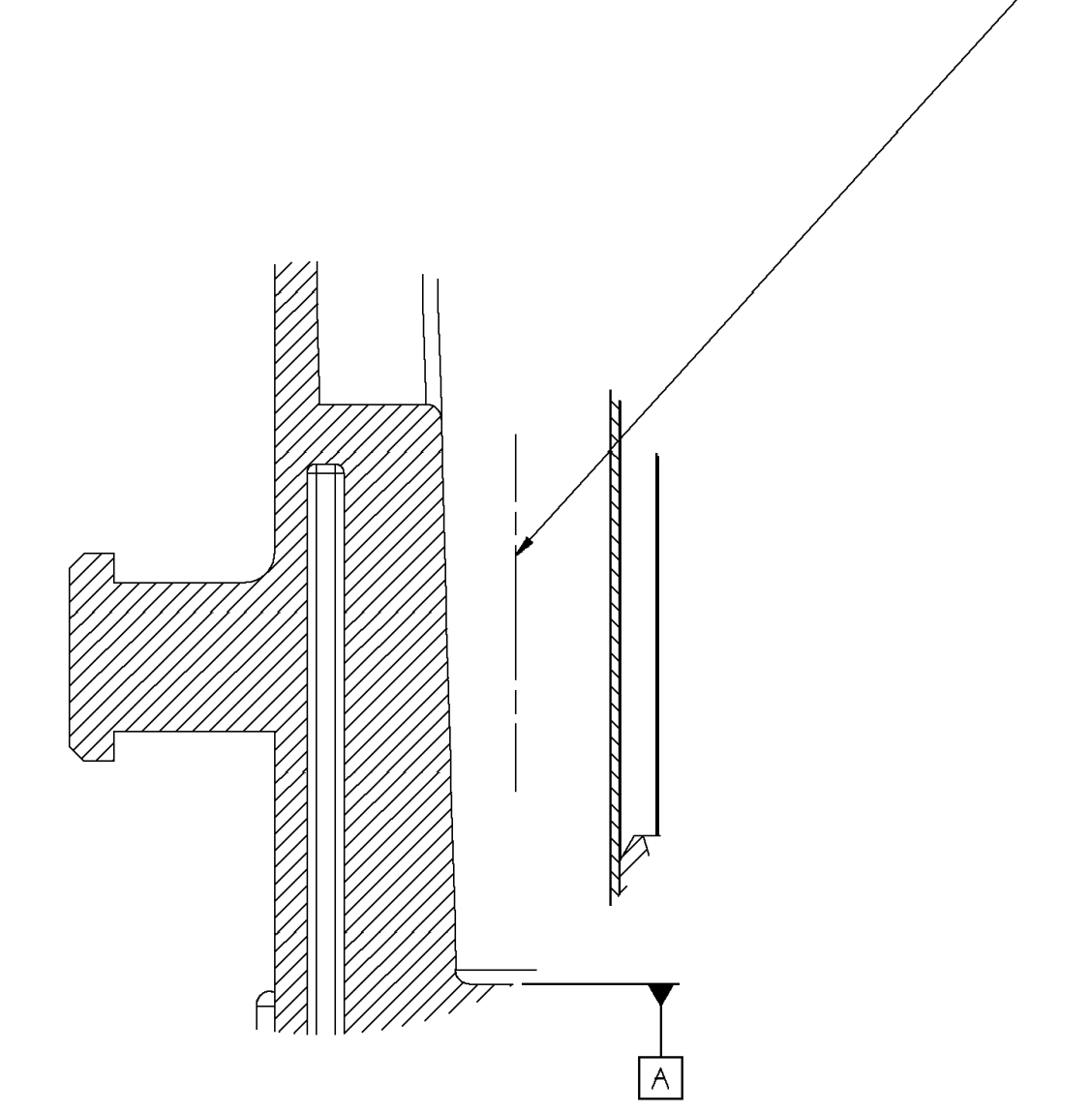

DETAIL T
SCALE 5:1

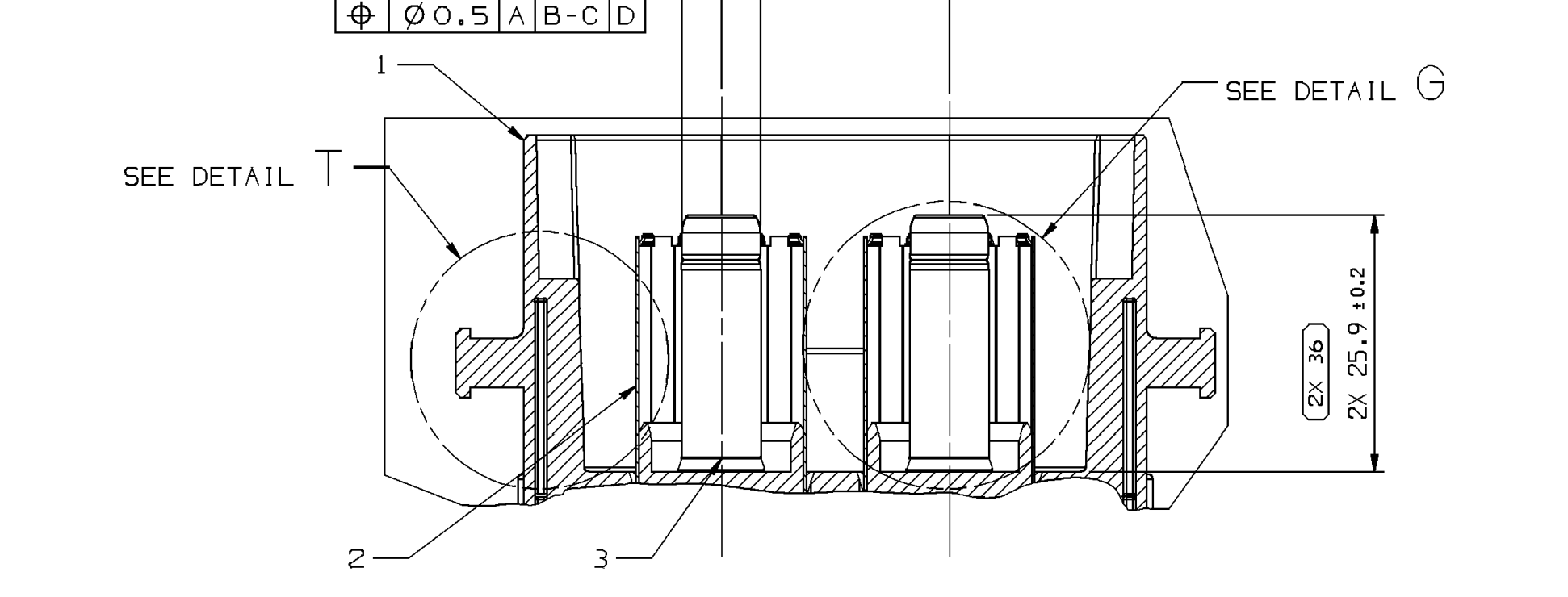

(2X 37) 2X Ø (8)
⊕ Ø0.5 A B-C D
23
SEE DETAIL T
SEE DETAIL G
1
2
3
(2X 36) 2X 25.9 ±0.2

SECTION A-A

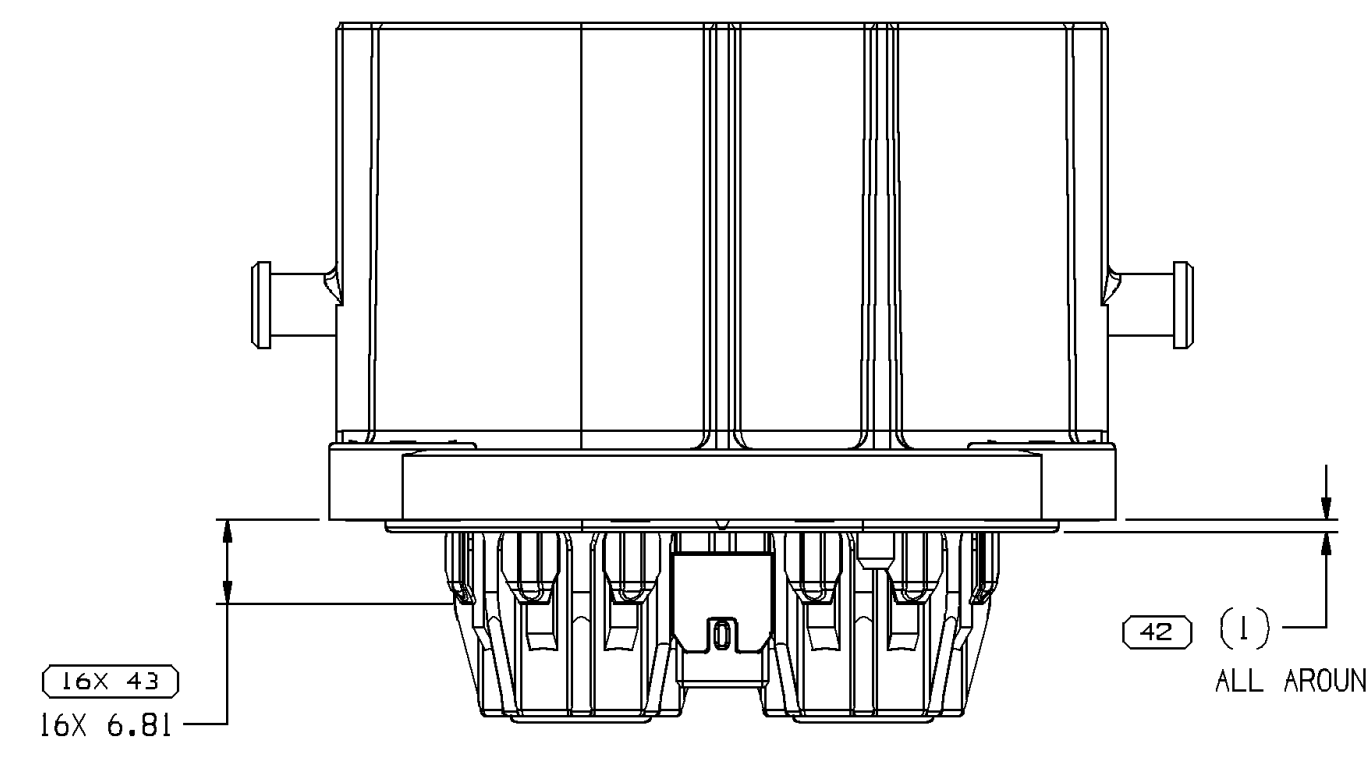

(16X 43) 16X 6.81
(42) (1) ALL AROUND

(41)
BUSHING SURFACE IS
THE SAME WITH HOUSING
BOTTOM SURFACE;
NOT EXCEED 0.1MM MAX.

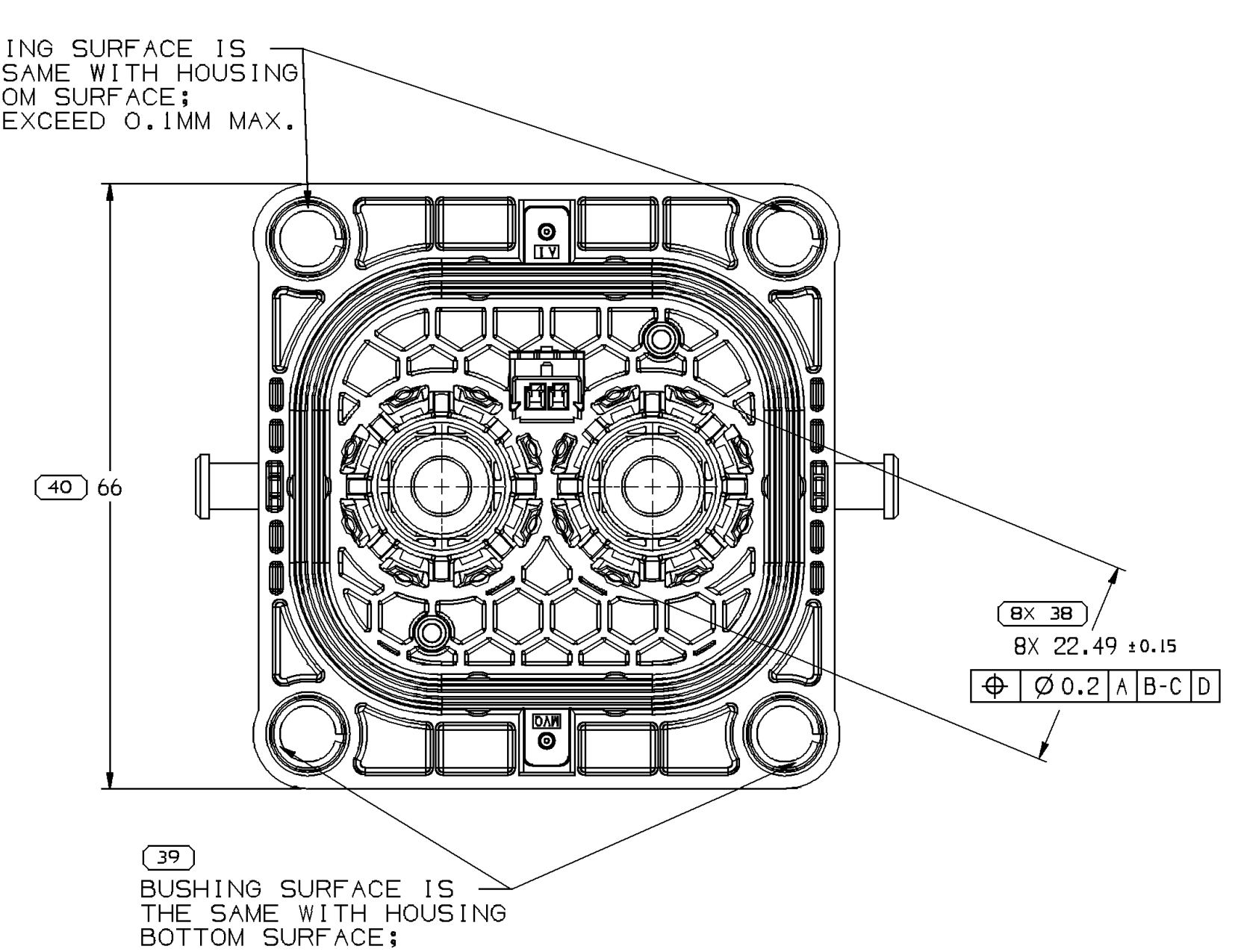

(40) 66
(8X 38) 8X 22.49 ±0.15
⊕ Ø 0.2 A B-C D

(39)
BUSHING SURFACE IS
THE SAME WITH HOUSING
BOTTOM SURFACE;
NOT EXCEED 0.1MM MAX.

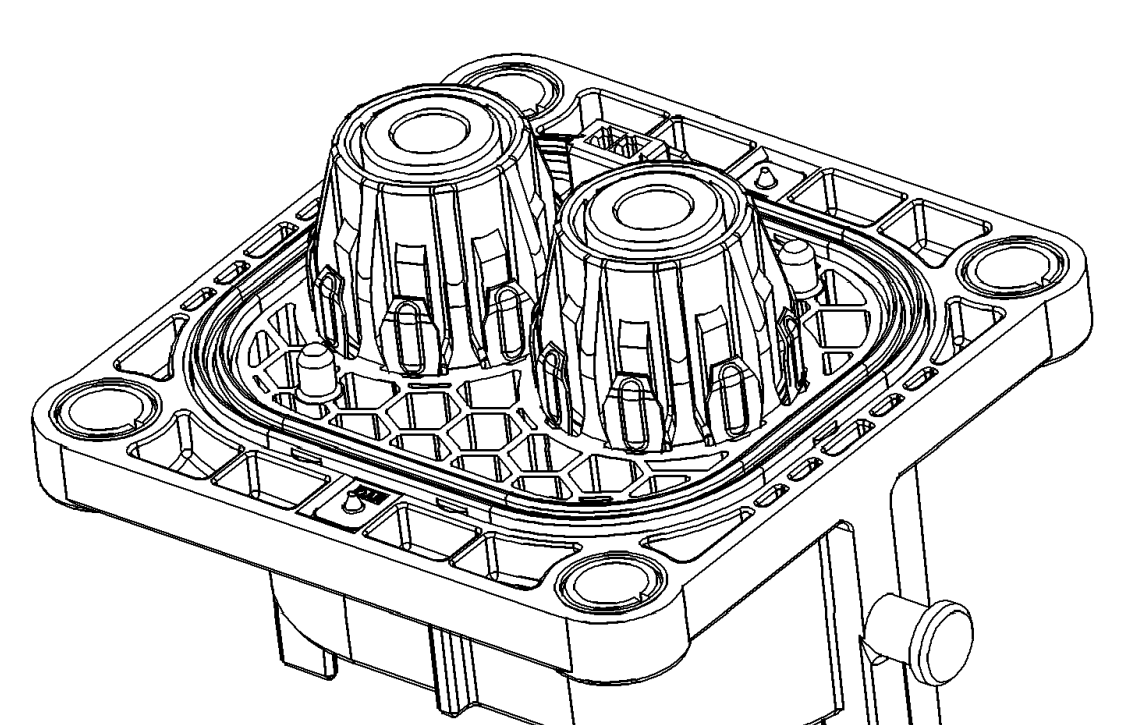

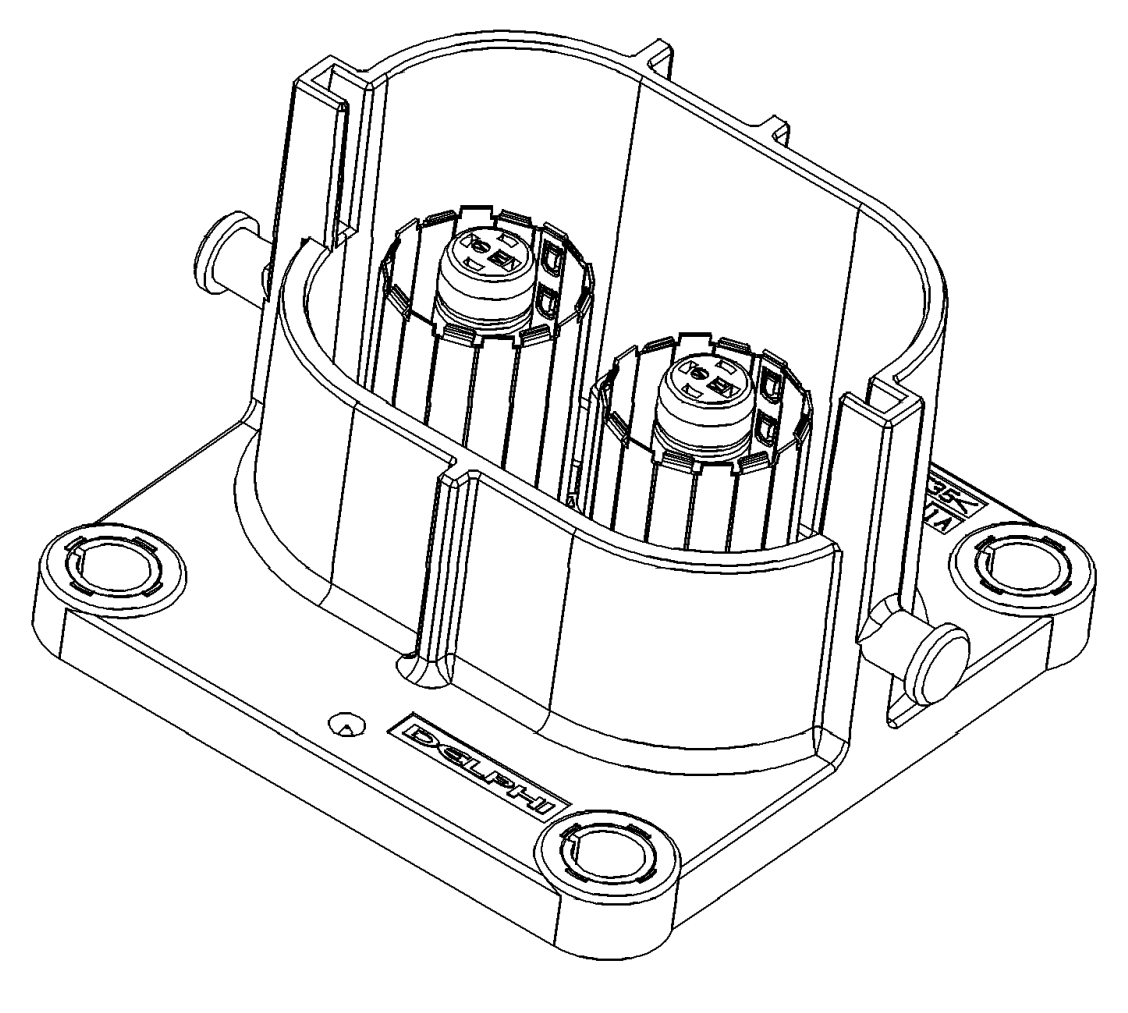

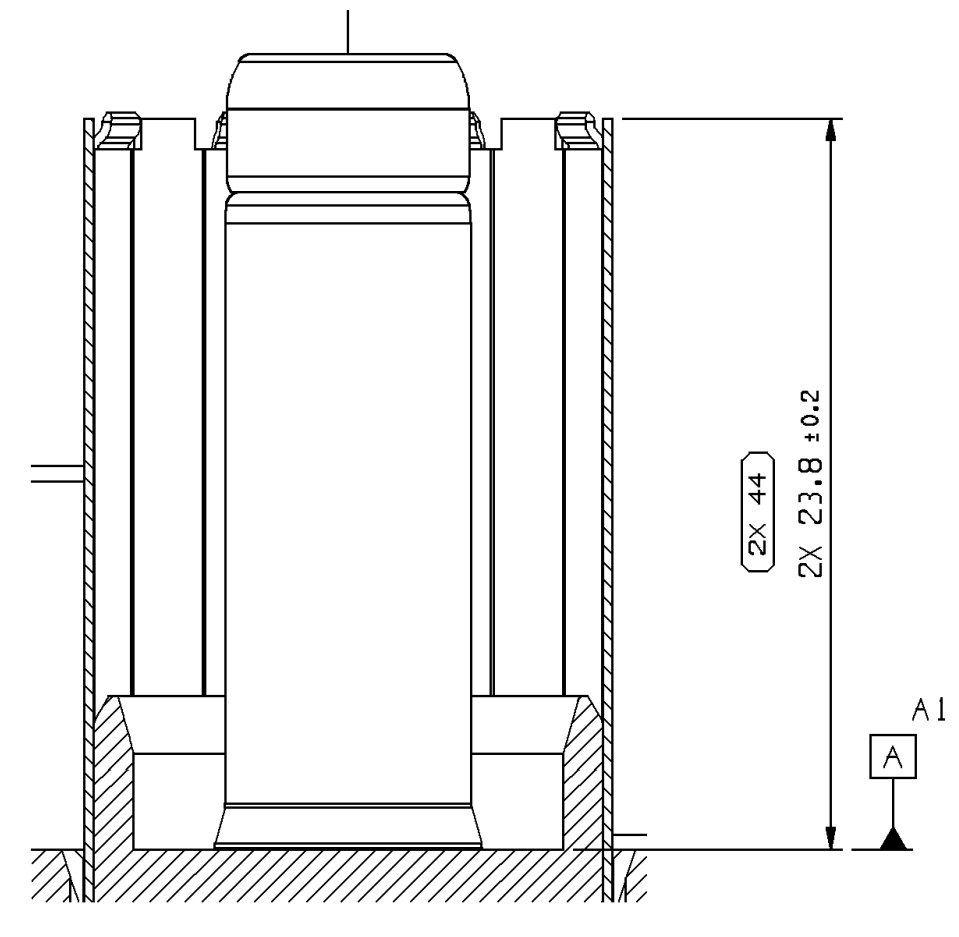

(2X 44) 2X 23.8 ±0.2
A1...A5
A

DETAIL G
SCALE 5:1

SYMBOL DEFINITION		
A DIMENSION WITHOUT AN INSPECTION REPORT SYMBOL ⬭ DOES NOT REQUIRE INSPECTION. IT MAY BE CONTROLLED ON THE INDIVIDUAL COMPONENT DRAWING.	TOTAL NO OF INSPECTIONS REQUIRED	70
	LAST NO. USED	44

MISSING SYMBOLS
NO MISSING SYMBOL NUMBER

DWG STATUS DATE	STG	REV	N/P	CHG	ZONE	REVISION HISTORY	AUTH	DR	APVD 1	APVD 2
05MY16	R	01	-	-		WAS PE316846,REVISED AND RELEASED	432992	WZM	WZM	WGJ

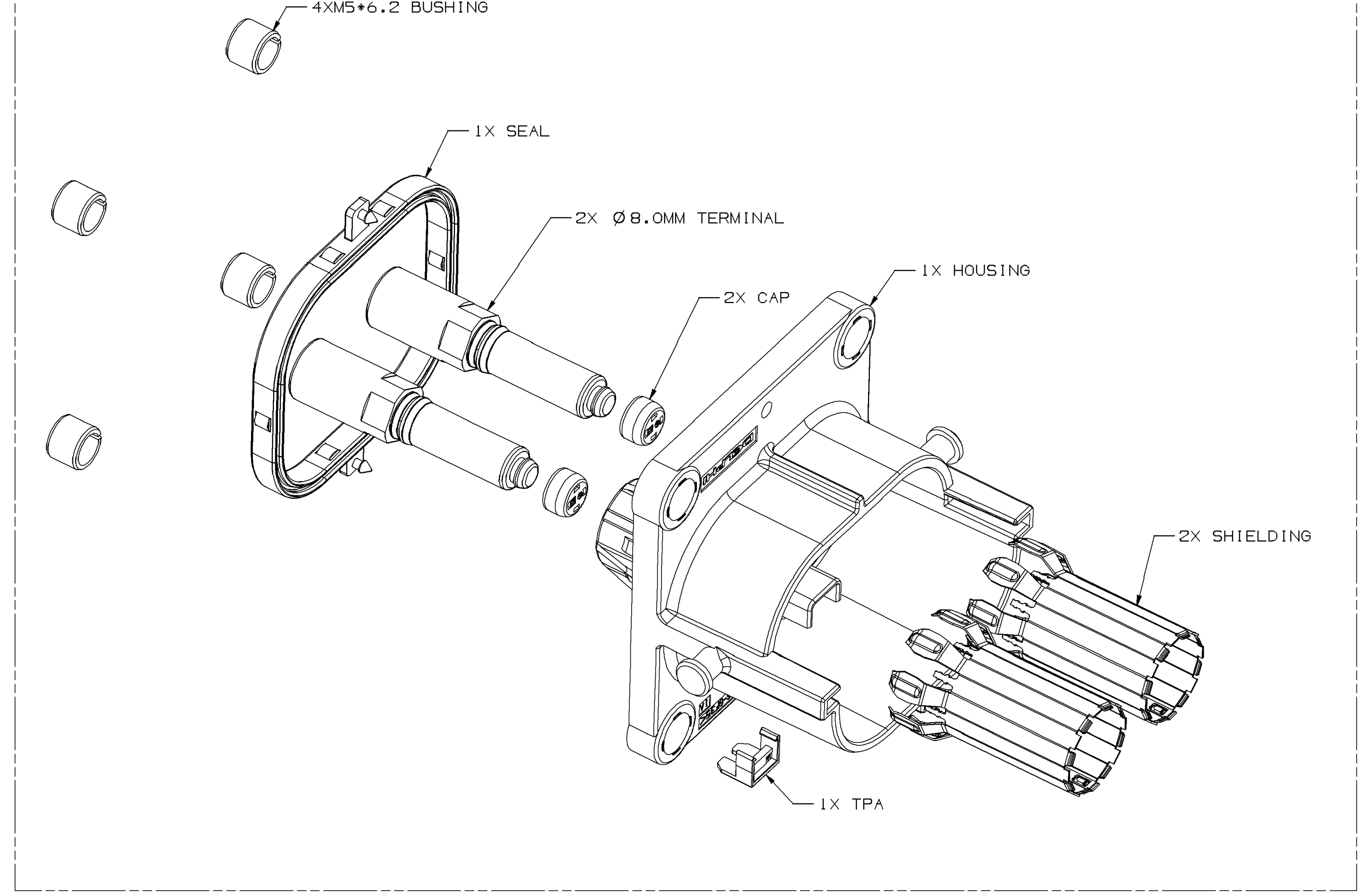

4XM5*6.2 BUSHING
1X SEAL
2X Ø8.0MM TERMINAL
2X CAP
1X HOUSING
2X SHIELDING
1X TPA

NOTES:

1. UNLESS OTHERWISE SPECIFIED AND/OR INDICATED:
   DIMENSIONS ARE TO FACE OF VIEW SHOWN AND AUTOMATICALLY ROUNDED BY COMPUTER FOR INSPECTION (SEE MATH MODEL FOR PRECISE DIMENSIONS). FOR ALL OTHER DIMENSIONS NOT SHOWN BUT REQUIRED FOR TOOL BUILD, SEE MATH MODEL FOR PRECISE TOOL PATH DATA.
   UNDEFINED DRAFT ANGLE SHOULD BE IN DIMENSION TOLERANCE
   LOCK FEATURE ARE IDENTICAL
2. APPEARANCE:
   CONNECTOR PIN HEADER SHOULD HAVE PART NUMBER, PRODUCTION DATE AND CAVITY NUMBER.
   SURFACE OF PLASTIC PARTS SHOULD BE SMOOTH, NO HOLES, CRACKS, SHRINK, DEFORMATIONS AND SCRATCHES ETC FAILURES.
   SMOOTH SURFACE ON METAL PARTS NO BURRS, NO RUST AND CRIMPLE AND FLAKE FAILURE.
   MAX.BURR 0.1MM ALLOWED, EXCEPT IN SEALING AREA.
   UNLESS OTHERWISE SPECIFIED IN THE DIMENSIONAL REQUIREMENT.
3. HOUSING MATERIAL:PA66+GF35 ORG,SIMILAR TO RAL 2003;
   CAP,TPA MATERIAL:PA66+GF35
   REGRIND IS NOT PERMITTED ON THIS PIN HEADER.

   SHIELDING MATERIAL:Cu-ALLOY; PLATING: Ni 1.3-4um;Ag:2-4um OVERALL.
   TERMINAL MATERIAL:Cu-ALLOY; PLATING: Ni 1.3-4um PORE TIGHT;Ag:2-5um OVERALL.
   BUSHING MATERIAL:HIGH CARBON STEEL;PLATING: MIN. 8um ZnNi.

   SEAL MATERIAL: LSR NATURAL;
4. THIS PART ACCEPTS THE FOLLOWING COMPONENTS OR EQUIVALENT:
   HVIL: N105981.07 OR N105982.07;
5. MATING CONNECTOR:33355781,33355782,33355783 & 33355784.
6. LEAKAGE SPEC OF HEADER SEAL: IP6K9K,IPX7;
7. BUSHING RETENTION FORCE IS 40N MIN.
   SHIELDING RETENTION FORCE WHOLELY IS 300N MIN.
   TERMINAL RETENTION FORCE IS 1000N MIN.
   TERMINAL SCREW TORQUE IS 9NM MIN.
   CAP RETENTION FORCE IS 70N MIN.

AK 2W CLASS 4 PIN HEADER

ASM PART NO	ASM CODING	REV	HOUSING	HOUSING CODE	TERMINAL	CAP PN	CAP CODE	CAP COLOR	SHIELDING	SEAL	TPA	BUSHING
33351457	CODE D	01	33351462	CODE D	33351475	33351467	CODE D	CLARE VIOLET	33351479	33351468	33351469	33351472
33351456	CODE C	01	33351461	CODE C		33351466	CODE C	BLUE				
33351455	CODE B	01	33351460	CODE B		33351465	CODE B	WHITE				
33351454	CODE A	01	33351459	CODE A		33351464	CODE A	BLACK				

DRAWING NUMBER 33351453						
SIZE	SCALE	FRAME NO	SHEET NO	STG	REV	N/P
A1x4	2:1	2 OF 2	1 OF 1	R	01	-

(44) PROCESS SENSITIVE DIMENSION

DIMENSIONS ENCLOSED IN ( ) INDICATE REFERENCE DIMENSIONS AND NO TOLERANCE LIMITS ARE ESTABLISHED

DIMENSIONAL RANGE (MM)									CHART E1
FROM	>0	>20	>30	>70	>100	>150	>200	>250	>300
TO	20	30	70	100	150	200	250	300	400
TOLERANCE UNLESS OTHERWISE SPECIFIED	±0.15	±0.2	±0.3	±0.4	±0.5	±0.6	±0.8	±1	±1.2

ANGULAR TOLERANCE ±2°

A ⟋ LINE DRAWN THROUGH A PART NUMBER INDICATES THAT PHYSICAL PARTS ARE NOT AVAILABLE FOR ORDERING.

PART NUMBERS THAT DO NOT HAVE A LINE PRESENT INDICATE THAT PHYSICAL PARTS ARE AVAILABLE FOR ORDERING.

CONTACT DELPHI SALES TO ASSURE AVAILABILITY OF PARTS.

DWG TYPE: PART DRAWING

STYLE

VOLUME (CM³): 41.078

DISTR CODE: D

UNLESS OTHERWISE SPECIFIED

THIS DOCUMENT IS IN ACCORDANCE WITH ASME Y14.5M-1994 AS AMENDED BY THE GM GLOBAL DIMENSIONING AND TOLERANCING ADDENDUM-2001. SEPARATE PATTERNS OF FEATURES MAY BE GAGED SEPARATELY REGARDLESS OF DATUM REFERENCES.

ALL DIMENSIONS ARE IN MILLIMETERS

REFERENCE

THIRD ANGLE PROJECTION

DO NOT SCALE

USE MATH DATA

CAD NX

DELPHI

DELPHI PACKARD ELECTRICAL/ELECTRONIC ARCHITECTURE
WARREN, OH

COPYRIGHT 2016 DELPHI CORPORATION AND/OR ITS AFFILIATES.
ALL RIGHTS RESERVED.

THIS DRAWING IS THE PROPERTY OF DELPHI CORPORATION AND CONTAINS DELPHI CONFIDENTIAL INFORMATION. THE REPRODUCTION, DISTRIBUTION AND UTILIZATION OF THIS DOCUMENT OR ITS RELATED CAD MATH DATA, AS WELL AS COMMUNICATION OF ANY CONTENT TO OTHERS, WITHOUT EXPRESS AUTHORIZATION, IS PROHIBITED.

		DATE
DR		
APVD1	WENZHENG MA	05MY16
APVD2	WENZHENG MA	05MY16
APVD3	WEIGUO JIANG	05MY16
APVD4		
APVD5		

SUBSTANCES OF CONCERN AND RECYCLED CONTENT PER DELPHI 10949001

MATERIAL: SEE CHART

DRAWING NAME: TAXI ASM MOUN HOUSING

DRAWING NUMBER: 33351453

SIZE	SCALE	FRAME NO	SHEET NO	STG	REV	N/P
A1x4	2:1	1 OF 2	1 OF 1	R	01	-

33351453