High Performance Thermal Circuit Breaker 4120-...

Description

Single pole, miniaturised thermal circuit breaker with trip-free mechanism and push/pull on/off manual actuation (M-type TO CBE to EN 60934). Threadneck panel mounted, temperature-compensated, with optional auxiliary contacts. Fully approved for commercial aircraft and similar requirements.
Various dummies are available without protective function, allowing connection of pre-installed wiring without loads.

Typical applications

Extra low voltage wiring systems on all types of vehicles for land, sea and air.

Ordering information

Type No.
- **4120** single pole, with temperature compensation
  - **Mounting**
    - **G** threadneck panel mounting
      - **Threadneck design**
        - **1** M12x1x6.3 (aluminium)
        - **2** 7/16-32 UNx6.3 (aluminium)
          - **Number of poles**
            - **1** 1-pole, thermally protected
              - **Hardware for threadneck**
                - **0** without hardware
                - **1** hex nut M12x1, corrugated washer 12/15, fitted
                - **3** hex nut M12x1 (aluminium), serrated lock washer 12.1/17.2, bulk shipped
                - **4** hex nut 7/16-32UN (aluminium), serrated lock washer 11.3/14.9, fitted
                  - **Terminal design (main terminals)**
                    - **K1** screw terminals with metric thread K14 (M4)
                    - **J1** screw terminals with inch thread J14 (8-32UNC-2B)
                    - **J2** screw terminals with inch thread J17 (8-32UNC-2B)
                    - **J3** screw terminals with inch thread J25 (6-32UNC-2B)
                    - **P1** blade terminals 6.3x0.8, DIN 46244, silver-plated
                      - **Characteristic curve**
                        - **M1** thermal, 1.15 - 1.4 I_N
                          - **Terminal screws**
                            - **A** Phillips screw M4x6, fitted
                            - **B** Phillips screw 8-32UNC-2Ax6, fitted
                            - **C** Phillips screw 6-32UNC-2Ax6 (MS 51957-26)
                            - **K** hex screw with Phillips head 8-32UNC-3Ax7.6, fitted
                            - **M** hex screw with Phillips head 8-32UNC-3Ax7.6, bulk shipped
                            - **Z** without terminal hardware
                              - **Terminal washers**
                                - **0** without lock washer
                                - **1** wave washer A4, fitted
                                - **2** lock washer 4.3, fitted
                                - **4** lock washer 3.7 (MS 35338-136)
                                - **5** lock washer 4.3/9, fitted
                                - **6** lock washer 4.3/9, bulk shipped
                                  - **Auxiliary contact**
                                - **S0** without auxiliary contact
                                - **S1** with auxiliary contact (connector EN 3155-016M2018) (NC)
                                - **S5** with polarized auxiliary contact (NC)
                                  - **Barrier**
                                - **Z** without barrier
                                  - **Colour of the push button**
                                - **G** green to EN (e. g. 2 1/2)
                                - **N** black to EN (e. g. 2 1/2)
                                  - **Current ratings**
                                - **1...25 A**

4120 - G 1 1 1 - K1 M1 - A 1 S0 Z N - 10 A ordering example

Please be informed that we have minimum ordering quantities to be observed.

4120-...

Technical data

For further details please see: www.e-t-a.de/ti_e

Voltage rating	AC 115 V (300 Hz to 800 Hz); DC 28 V	
Current rating range	1...25 A	
Auxiliary circuit	1 A, DC 28 V	
Typical life	20,000 operations mechanical, or 5,000 operations at 1 x I_N	
Ambient temperature	-55°C ...+125°C (-67...+257 °F)	
Insulation co-ordination (IEC 60664 and 60664A)	rated impulse withstand voltage 1.5 kV	pollution degree 3
Dielectric strength (IEC 60664 and 60664A) operating area main to aux. circuit	test voltage AC 1,500 V AC 1,500 V	
Insulation resistance	> 100 MΩ (DC 500 V)	
Interrupting capacity I_{cn}	AC 115 V (400 Hz): 1...4 A 5...25 A DC 28 V: 1...25 A	1,000 A 2,000 A 6,000 A
Degree of protection (IEC 60529/DIN 40050)	operating area IP40 terminal area IP00	
Vibration (sinusoidal)	10 g (57-2000 Hz), ± 0.76 mm (5-57 Hz) to ISO 7137, EN 2350 para. 5.3.1	
Vibration	1...2.5 A: 0.04 g^2/Hz ± 1,5 dB; 7.3 g eff 3...20 A: 0.06 g^2/Hz ± 1,5 dB; 9 g eff to ISO 7137, EN 2350 para. 5.3.1	
Acceleration	17 g, to ISO 2669, EN 2350 para. 5.3.3	
Shock	50 g (11 ms), to ISO 7137, EN 2350 para. 5.3.2	
Corrosion	48 hours at 5 % salt mist to ISO 7137, EN 2350 para. 5.4.2	
Humidity	240 hours at 95 % RH, to ISO 7137, EN 2350 para. 5.4.3	
Explosion	to VG 95210, sheet 10	
Altitude	≤ 22,000 m above sea level	
Mass	approx. 20.6 g approx. 24.6 g	with terminal screws, without -Si with terminal screws, with -Si

Preferred types

Preferred types	Standard current ratings (A)								
	1	2	3	5	7.5	10	15	20	25
4120-G214-J1M1-B2S0ZN (MS3320)	x	x	x	x	x	x	x	x	x
4120-G111-K1M1-A1S0ZN (EN 2495/VG93345 T06)	x	x	x	x	x	x	x	x	x

1

Standard current ratings and typical volt drop values

Current rating (A)	Volt drop (mV)	Current rating (A)	Volt drop (mV)
1	1100	7.5	250
2	550	10	230
2.5	460	15	200
3	440	20	190
4	380	25	190
5	260		

Approvals (configurations)

Authority	Standard	Voltage ratings	Current ratings
UL	UL 1077	DC 50 V	1 A...25 A
Bw	VG 95345, part 6	AC 115 V, 400 Hz DC 28 V	1 A...25 A 1 A...25 A
Bw	EN 2495-...U / -...M	AC 115 V, 400 Hz DC 28 V	1 A...25 A 1 A...25 A
Bw	LN 29887	AC 115 V, 400 Hz DC 28 V	5 A...25 A 5 A...25 A
Bw	EN 3773-004	AC 115 V, 400 Hz DC 28 V	1 A...25 A 1 A...25 A
Dep. of the Navy	MS 3320	AC 115 V, 400 Hz DC 28 V	1 A...20 A 1 A...20 A
Airbus	EN 2995-004	AC 115 V, 400 Hz DC 28 V	1 A...25 A 1 A...25 A
Airbus	EN 2995-005	AC 115 V, 400 Hz DC 28 V	1 A...25 A 1 A...25 A

Dimensions 4120-...

4120-G214-J1M1-B2S0ZN (MS 3320)

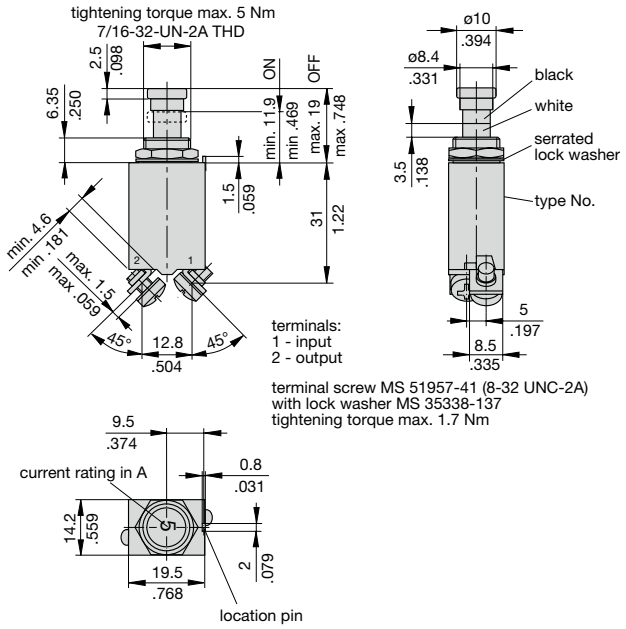

This is a metric design and millimeter dimensions take precedence (mm/inch)

Dimensions 4120-G1..

4120-G111-K1M1-A1S0ZN (EN2495-...M) (VG95345 T06)

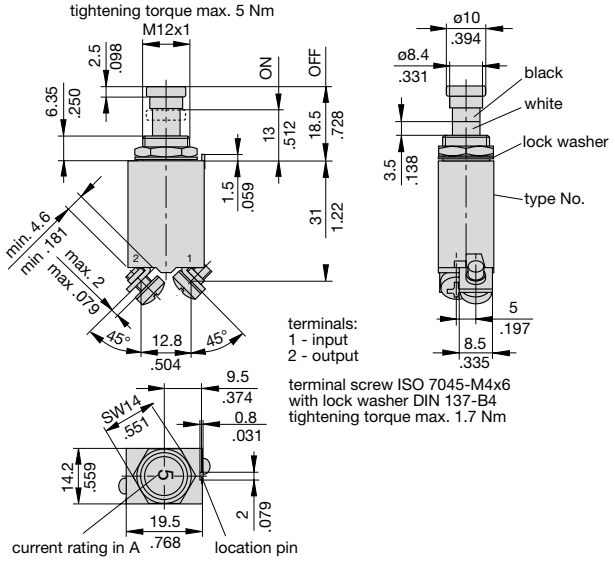

4120-G11.-J2M1-K5S0ZN (EN2495-...U, EN3773-004 D...)

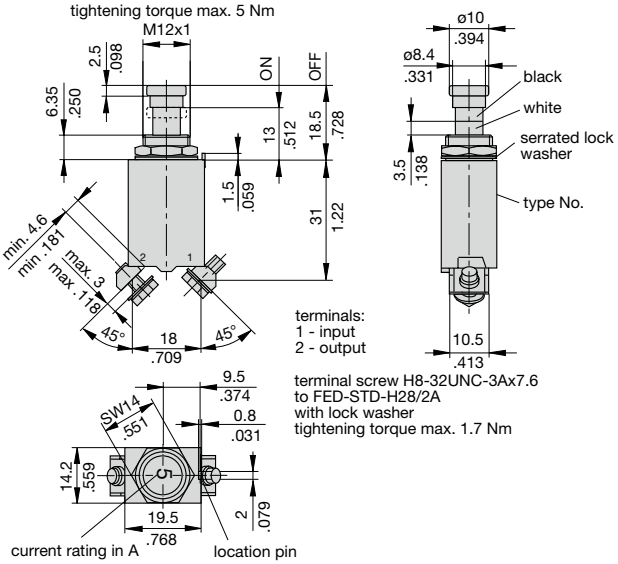

4120-G112-J2M1-K5S1ZG - 4120-G112-J2M1-K5S5ZG

(EN2995-004) (EN2995-005)

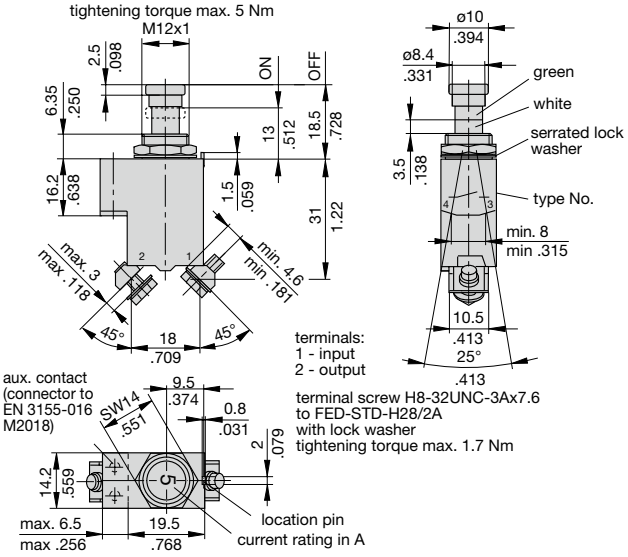

Mounting holes

4120-G2...

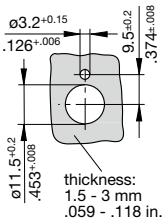

mounting holes S0

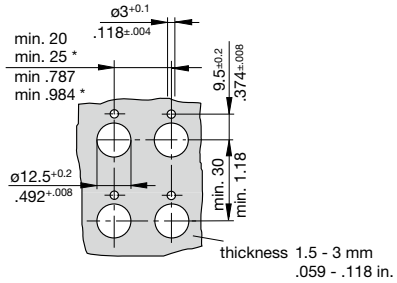

4120-G1...

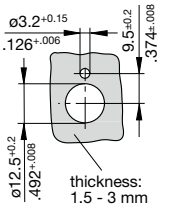

mounting holes S1 or S5

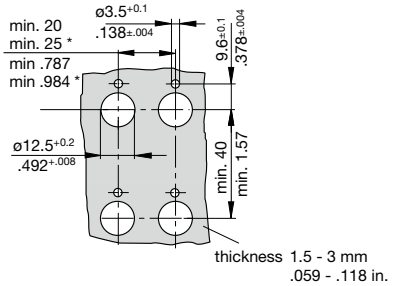

* min. 25 mm / .984 in. when fitted with splash cover

Other terminal designs

Terminal design -J2

Terminal distances to:
MS 14 105 (a, b)
MS 14 153 (a, b)
MS 22 073 (a)
MS 22 074 (a)
MS 25 244 (a)
MS 25 373 (a, b)

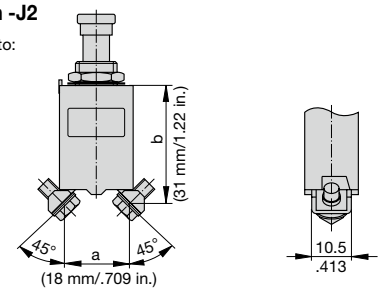

Terminal design -J3

Terminal distances to:
MS 26 574 (a, b)

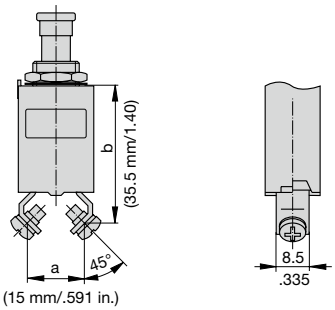

Terminal design -P1

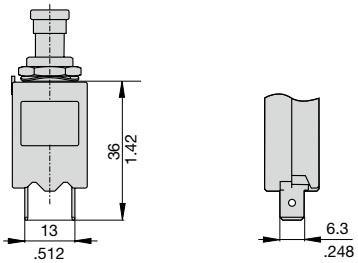

Internal connection diagram

with auxiliary contact
VG 95345 T06

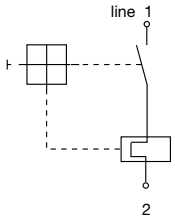

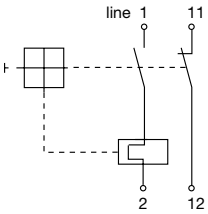

with auxiliary contact
EN 2995-004

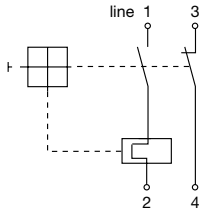

with polarized auxiliary contact
EN 2995-005

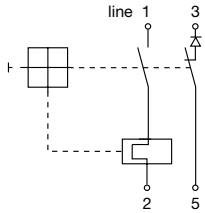

Typical time/current characteristics

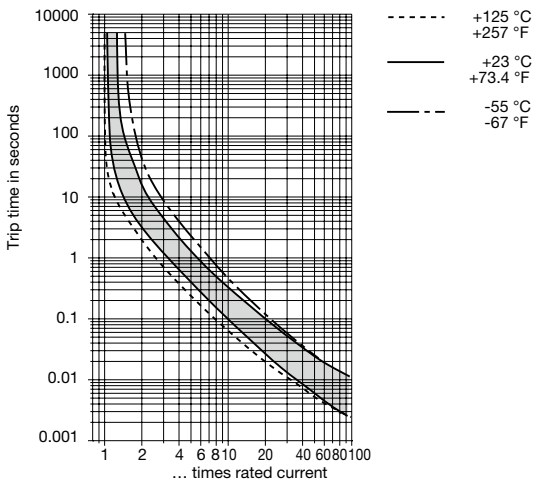

This is a metric design and millimeter dimensions take precedence ($\frac{mm}{inch}$)