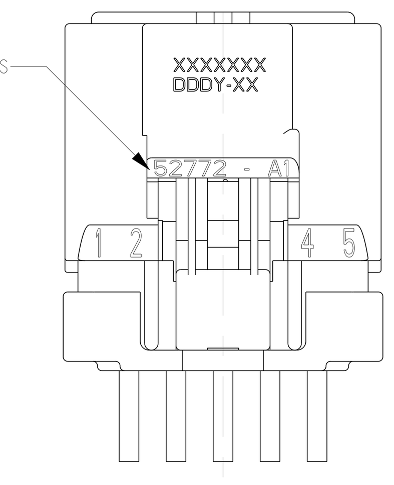

SUPPLEMENTARY VIEW
SHOWN W/O CPA
SEE P/N CHART
ALL DIMENSIONS SAME
AS WITH CPA VIEWS

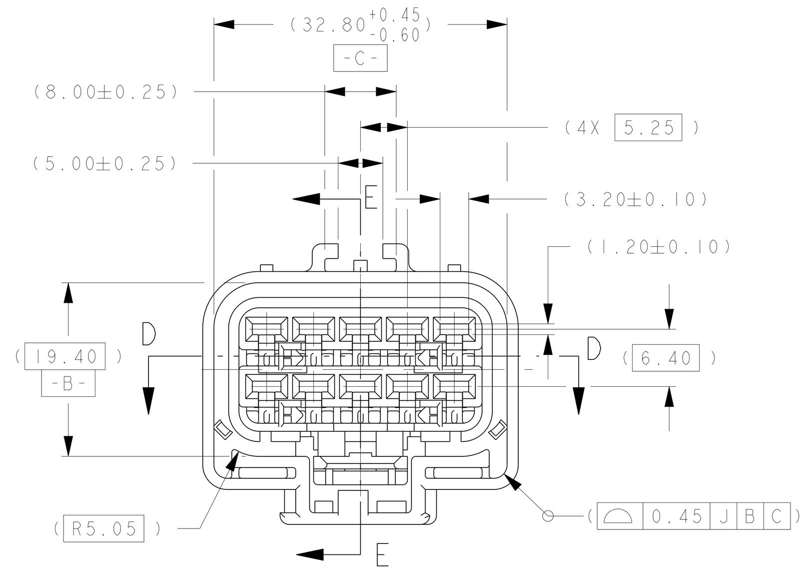

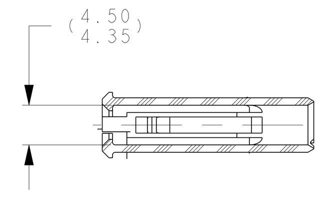

PARTIAL SECTION F-F

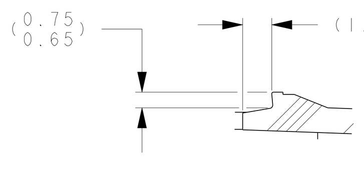

DETAIL Y
TERM LOCK FINGER
SCALE 5:1

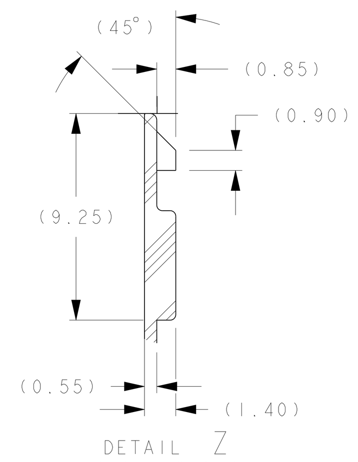

DETAIL Z
1 PLC. AS SHOWN
1 PLC. SYM. OPP.
SCALE 5:1

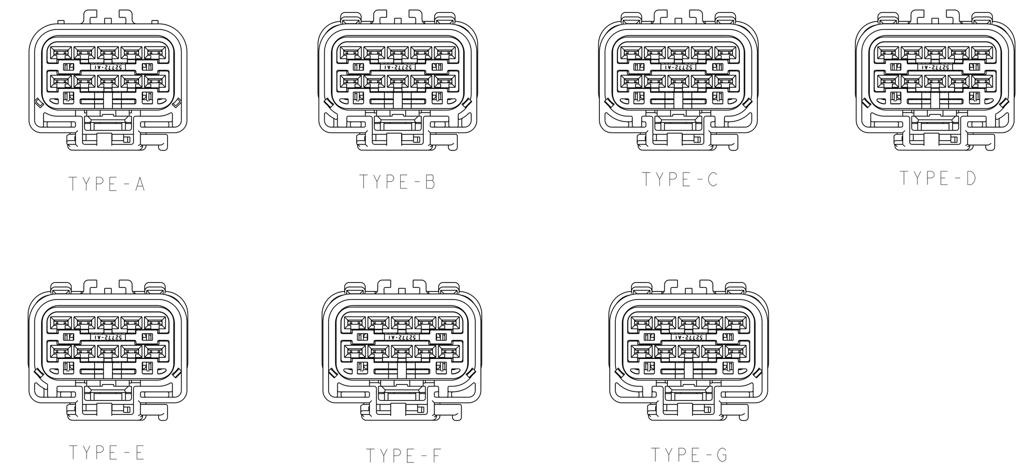

POLARIZATION OPTIONS
FULL SIZE
SHOWN WITH CPA

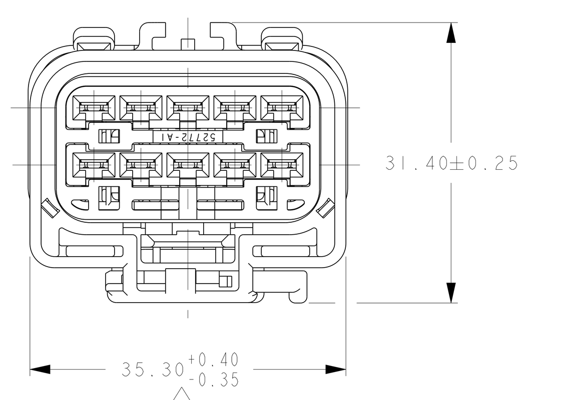

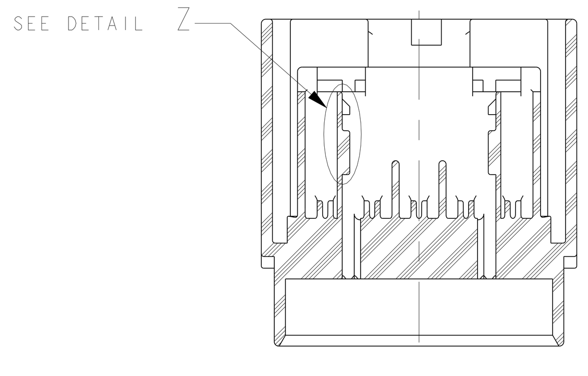

SECTION D-D

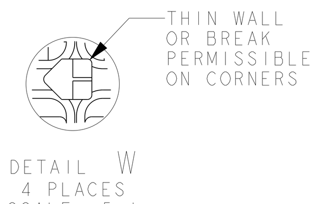

DETAIL W
4 PLACES
SCALE 5:1

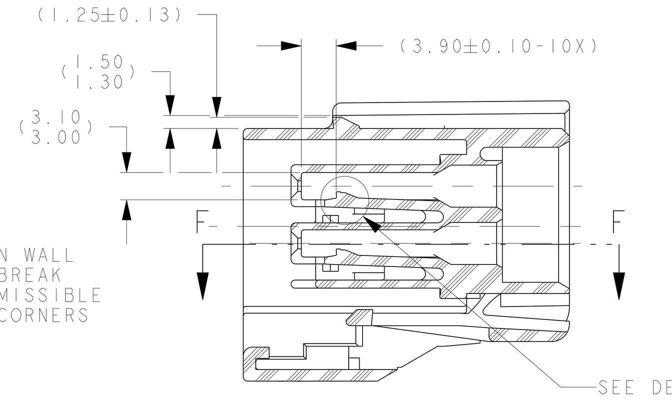

CAVITY DETAIL VIEW
SECTION E-E

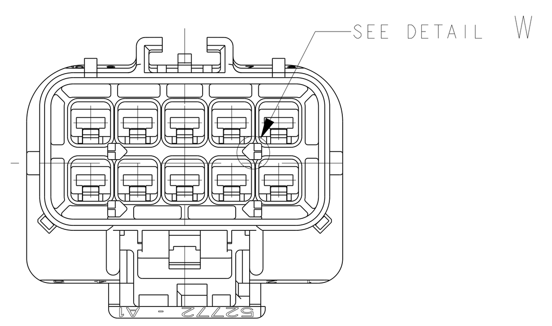

INSULATOR VIEWS AND DIMENSIONS FOR REFERENCE ONLY

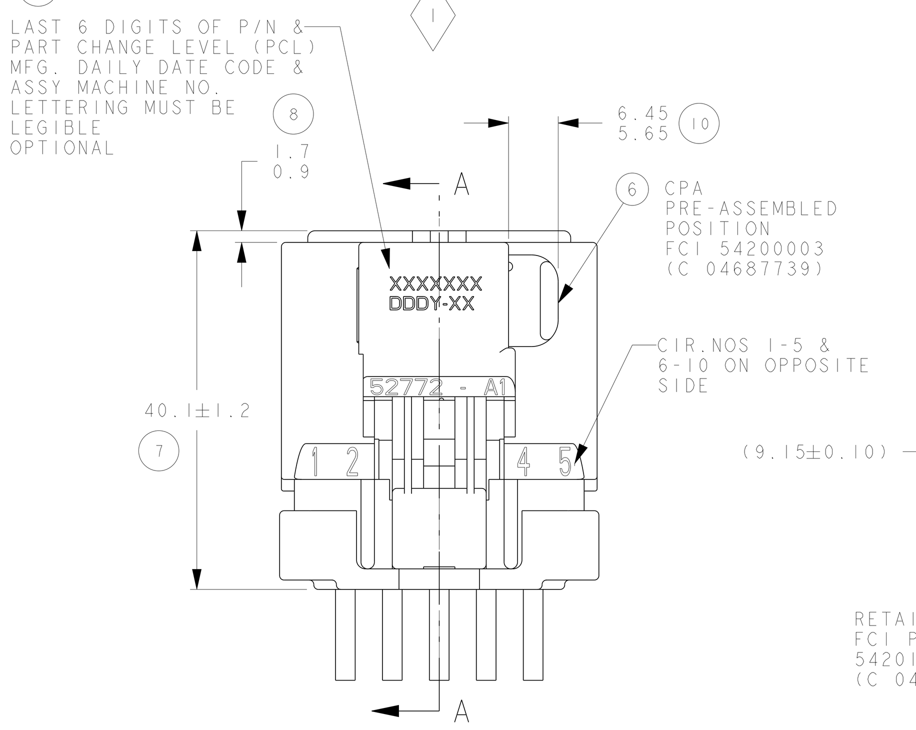

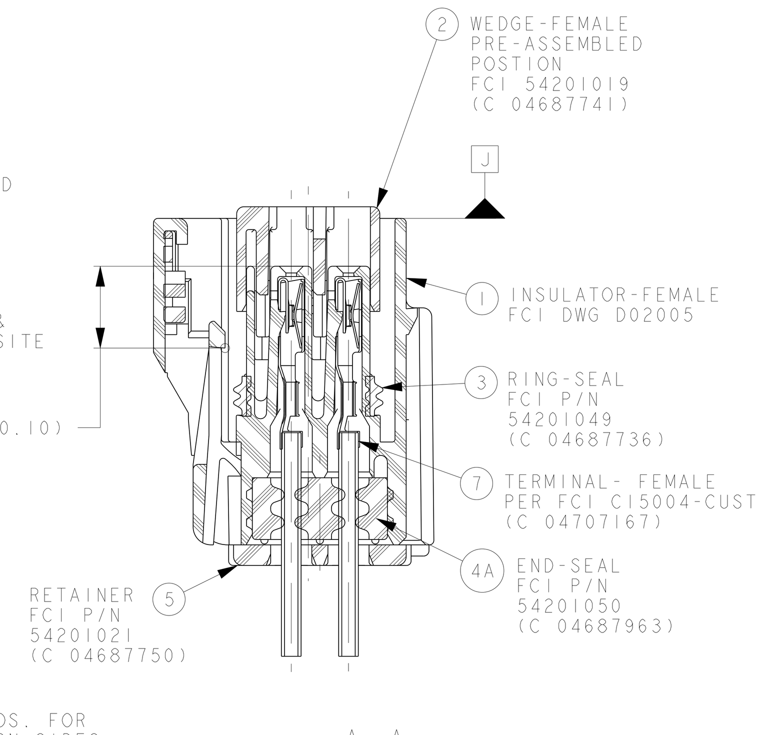

SECTION A-A

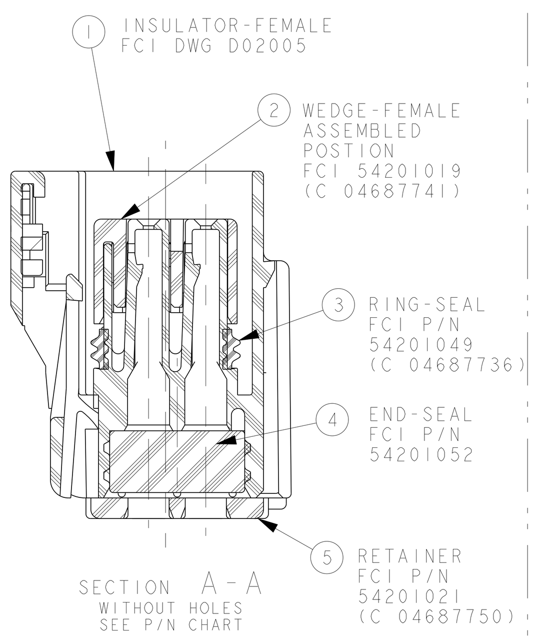

SECTION A-A
WITHOUT HOLES
SEE P/N CHART

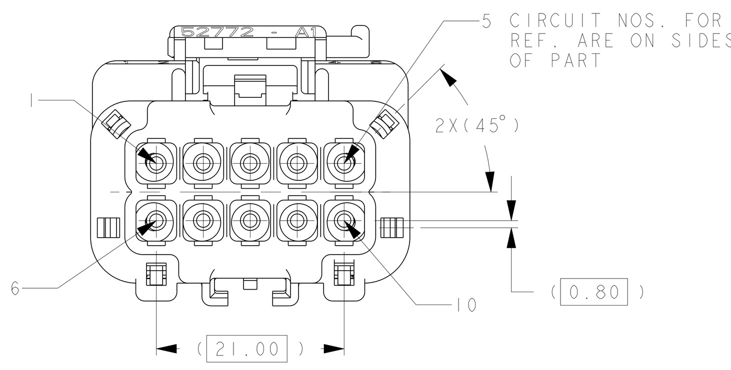

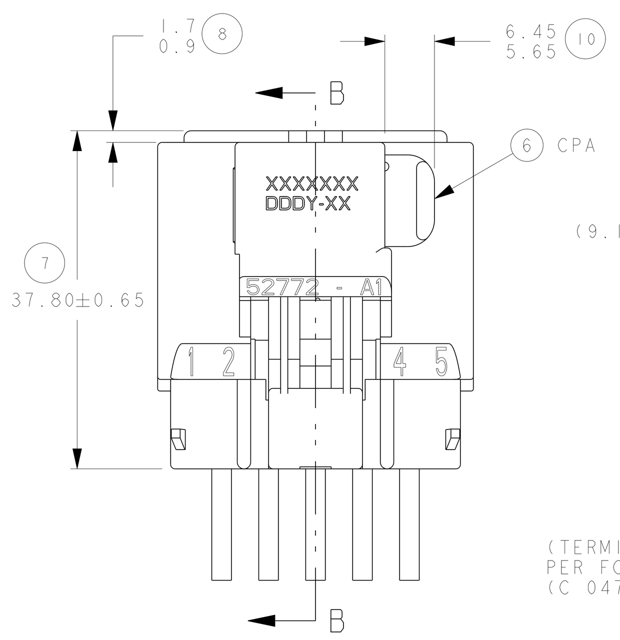

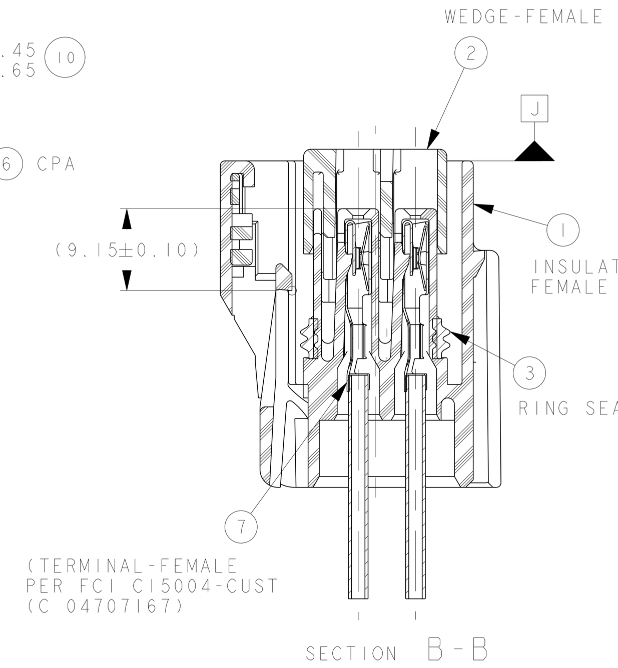

SECTION B-B

SEALED ASSEMBLY VIEW
SEE PART NUMBER CHART
*SHIPPED WITHOUT END SEAL AND RETAINER

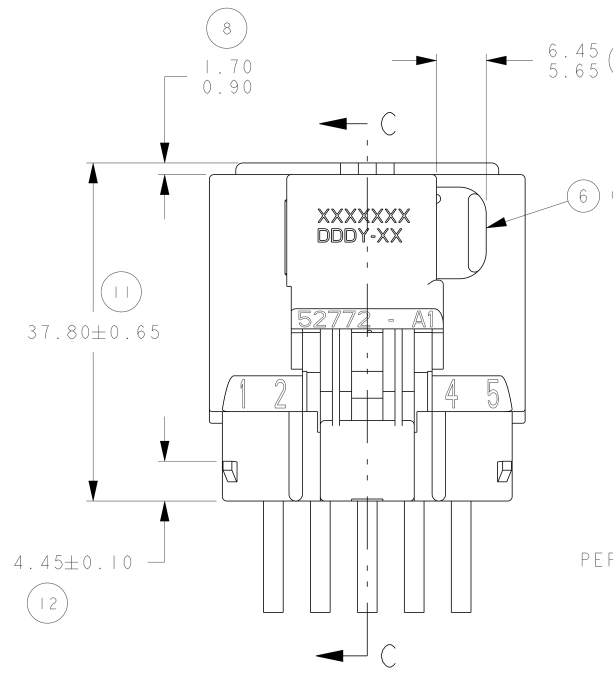

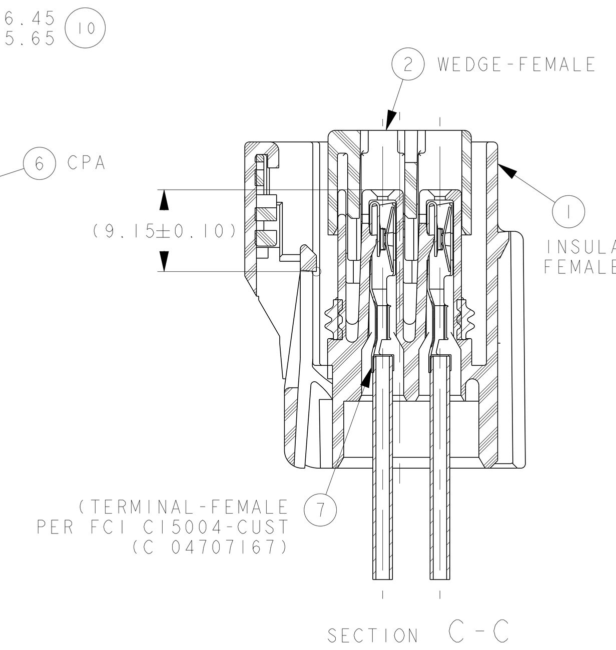

SECTION C-C

UNSEALED ASSEMBLY VIEW
SEE PART NUMBER CHART

NOTES:

1. QUALITY ASSURANCE REQUIREMENTS PER PS-7300: 1◇ SPC DATA REQUIRED
2. ENGINEERING APPROVAL OF SUPPLIER SAMPLES IS REQUIRED PRIOR TO AUTHORIZATION OF PART PRODUCTION
3. CHANGES IN DESIGN COMPOSITION OR PROCESSING FROM THE PART PREVIOUSLY APPROVED FOR PART PRODUCTION REQUIRES PRIOR ENGINEERING APPROVAL
4. WIRING FABRICATORS MUST PURCHASE FROM SOURCES SHOWN
5. ALL THE SEALED APPLICATIONS WITH 54201050 END SEAL MUST BE USED WITH CHRYSLER WIRE SPEC. MS-8288 OR MS-9502 THIN WALL X-LINK 20,18,16,14 & 12 GAGE WIRES ONLY UNLESS OTHERWISE SPECIFIED (WIRE INSULATION RANGE Ø1.70 MIN TO Ø3.35 MAX) ISO THIN WALL EQUIVALENTS ALLOWED

5A. P/N WITH C755900 END SEAL MUST BE USED WITH WIRE INSULATION RANGE FROM Ø1.90 MIN TO Ø3.70 MAX (18AWG TO 12AWG OR $1mm^2$ TO $4mm^2$ ISO THIN WALL)

6. ALL NON-SEALED APPLICATIONS MAY BE USED WITH ANY WIRE INSULATION 22 GAGE THRU 10 GAGE & ISO THIN WALL EQUIVALENTS PROVIDING THAT A TERMINAL GRIP FOR THAT CORE/INSULATION COMBINATION IS SHOWN ON THE FEMALE TERMINAL DRAWING:
FCI C15004-CUST
   MAX. INSULATION CRIMP WIDTH = 4.50
   MAX. INSULATION CRIMP HEIGHT = 4.50
   MAX. INSULATION DIA = 4.09 (10 GA THIN WALL)
7. USE WITH CAVITY PLUG FCI P/N 54200005. [(C) 56038308 WHEN REQ'D]
USE WITH DOUBLE X-MAS TREE CLIP (C) 04707091 WHEN REQUIRED
USE WITH SINGLE X-MAS TREE CLIP (C) 04625797 WHEN REQUIRED
THE 2.8MM APEX TERMINAL IS SYMMETRICAL ABOUT CENTER LINE AND IT CAN BE INSERTED 180° INTO TERMINAL CAVITY
8. DIRECT CONNECT DRAWING NO. FCI G36010 (CHRYSLER 04707028)
9. TEST METHOD PER CHRYSLER PERFORMANCE SPEC # SAE/USCAR-2 REV 5, CONNECTOR ENGAGE & DISENGAGE WITH LATCH DEPRESSED FORCE NOT TO EXCEED 120N FOR THIS SYSTEM

   CPA SEATING FORCES - 40N MAX

   WEDGE SEATING FORCES - 120N MAX

   X-MAS TREE CLIP INSERTION FORCES - 75N MAX
10. SUPPLIER I.D. SIGNIFIES TOOL OWNERSHIP FOR REFERENCE
11. ANNUAL QUALITY REQUIREMENTS:
 IT IS PERMISSIBLE TO PERFORM CONTINUOUS CONFORMANCE PER FCI SPECIFICATION #AQA-001 INSTEAD OF ANNUAL LAYOUT & ANNUAL PV REQUIREMENTS OF QS-9000 SECTION 2 & SAE/USCAR-2 REV 5

ALL NON-REFERENCE DIMENSIONS ARE REQUIRED

- USE INDEX A, BLACK SEALED AND UNSEALED FOR ALL AFFECTED INSULATOR CAVITIES
- CURRENT PRODUCTION TOOLING
- POINT OF LAST RUN

SERVICE TOOLING GUIDE INFORMATION PER APEX TRAINING MANUAL

12. MUST CONFORM TO THE FOLLOWING CHRYSLER/YNA STANDARDS:
SAE/USCAR-2 REV 5 FOR LATCH PERFORMANCE & AUDIBILITY
SAE/USCAR-2 REV 5 EXCEPT AS NOTED ABOVE
PS-7300 QUALITY ASSURANCE (CHRYSLER)
PS-4480-CEK-4 (CHRYSLER) PART I.D., (G-009-2 YNA)
PS-9065 REGRIND (CHRYSLER), (G-009-3 YNA)
PS-9227 DATA EXCHANGE (CHRYSLER), (G-009-7 YNA)
PS-10052 INFORMATION SECURITY (CHRYSLER)
13. THIS DRAWING (H59005) REPLACES CHRYSLER DRAWING NUMBER 04687872 LEVEL "R"
CHRYSLER DRAWING IS FOR REFERENCE ONLY
14. FCI P/N'S WITH SUFFIX "N" DESIGNATES ASSEMBLIES W/O CPA

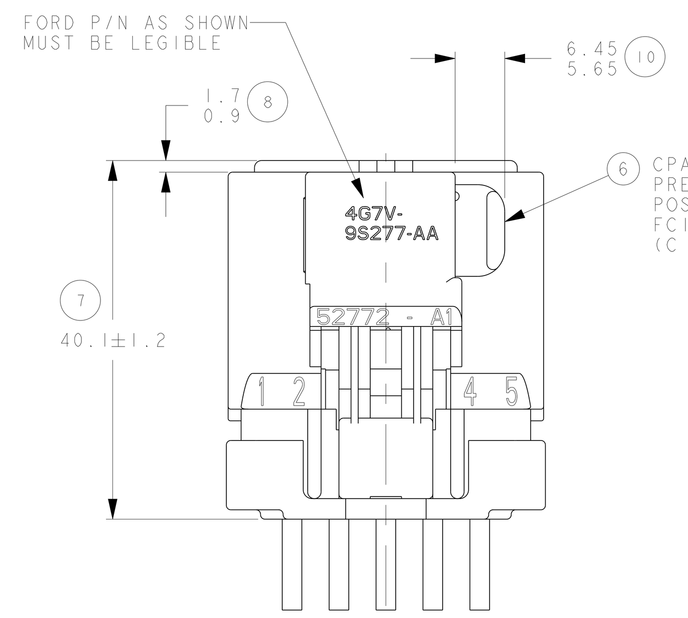

SUPPLIMENT VIEW
FOR 4G7V-9S277-AA

MATING PART NUMBER CHART

INDEX TYPE	COLOR	SEALED/ UNSEALED	FEMALE ASSEMBLY PART NUMBERS: FCI	CUSTOMER	YNA	MATING ASSEMBLY PART NUMBERS FOR REFERENCE ONLY: FCI	CUSTOMER	YNA
G	LT BRN	SEALED	54201043N	N/A	N/A	54201042	N/A	N/A
		SEALED	54201043	C 04868049AA	N/A	54201042	C 04868047AA	N/A
		SEALED	*54201063	N/A	N/A	DIRECT CONNECT APPLICATION INDEX G		
		SEALED	*54201065N	N/A	N/A	DIRECT CONNECT APPLICATION INDEX G		
F	AQUA	UNSEALED	54201005N	N/A	N/A	DIRECT CONNECT APPLICATION INDEX F		
		UNSEALED	54201005	C 04687905	7283-4809-90	DIRECT CONNECT APPLICATION INDEX F		
		SEALED	54201015N	N/A	N/A	DIRECT CONNECT APPLICATION INDEX F		
		SEALED	54201015	C 04687899	7283-4806-90	DIRECT CONNECT APPLICATION INDEX F		
E	DK GRN	UNSEALED	54201003N	N/A	N/A	DIRECT CONNECT APPLICATION INDEX E		
		UNSEALED	54201003	C 04687904	7283-4808-60	DIRECT CONNECT APPLICATION INDEX E		
		SEALED	54201013N	N/A	N/A	DIRECT CONNECT APPLICATION INDEX E		
		SEALED	54201013	C 04687898	7283-4805-60	DIRECT CONNECT APPLICATION INDEX E		
D	ORANGE	UNSEALED	54201004N	N/A	N/A	DIRECT CONNECT APPLICATION INDEX D		
		UNSEALED	54201004	C 04687903	7283-4807-50	DIRECT CONNECT APPLICATION INDEX D		
		SEALED	54201014N	N/A	N/A	DIRECT CONNECT APPLICATION INDEX D		
		SEALED	54201014	C 04687897	7283-4804-50	DIRECT CONNECT APPLICATION INDEX D		
C	DK GREY	SEALED	54201011N	N/A	N/A	DIRECT CONNECT APPLICATION INDEX C		
		SEALED	54201011	C 04801117	7229-2829-40	DIRECT CONNECT APPLICATION INDEX C		
		SEALED	*54201023N	N/A	N/A	DIRECT CONNECT APPLICATION INDEX C		
		SEALED	*54201023	C 04801112	7223-1609-40	DIRECT CONNECT APPLICATION INDEX C		
		SEALED	F066900	N/A	N/A	DIRECT CONNECT APPLICATION INDEX C		
		SEALED	△F071010	N/A	N/A	JOHN DEERE LITTLE FUSE LOAD CENTER		
	LT GRN	UNSEALED	54201002N	N/A	N/A	54201008	N/A	N/A
		UNSEALED	54201002	C 04687902	7223-1109-60	54201008	C 04687911	7222-1009-60
		SEALED	54201012N	N/A	N/A	54201018	N/A	N/A
		SEALED	54201012	C 04687896	7283-4803-60	54201018	C 04687908	N/A
		SEALED	*54201062	N/A	N/A	DIRECT CONNECT APPLICATION INDEX C		
		SEALED	*54201064N	N/A	N/A	DIRECT CONNECT APPLICATION INDEX C		
B	LT GREY	SEALED	F671310	N/A	N/A	DIRECT CONNECT APPLICATION INDEX B		
		UNSEALED	54201001N	N/A	N/A	54201007	N/A	N/A
		UNSEALED	54201001	C 04687901	7283-4802-40	54201007	C 04687910	N/A
		SEALED	F961010	N/A	N/A	JOHN DEERE LITTLE FUSE LOAD CENTER		
		SEALED	54201010N	N/A	N/A	54201017	N/A	N/A
		SEALED	54201010	C 04687895	7283-4605-40	54201017	C 04687907	7282-4605-40
		SEALED	54201010	C 04687895	7283-4605-40	54201024	C 04688875	7282-4605-40
		SEALED	△ F956900	N/A	N/A	DIRECT CONNECT APPLICATION INDEX B		
A	BLACK	UNSEALED	54201000N	N/A	N/A	54201006	N/A	N/A
		UNSEALED	54201000	C 04687900	7283-4606-30	54201006	C 04687909	N/A
		SEALED	54201009	C 04687894	7223-1605-30	54201016	C 04687906	7222-7406-30
		SEALED	*54201022N	C 04707443	7283-4801-30	54201016	C 04687906	7222-7406-30
		SEALED	*54201054	C 04759589AA	7283-4901-30	54201016	C 04687906	7222-7406-30
		SEALED	54201054	C 04759589AA	7283-4901-30	54201058	C 56045040AA	N/A
		SEALED	54201056N	N/A	7283-4608-30	54201016	C 04687906	7222-7406-30
		SEALED	△ F856900	N/A	N/A	DIRECT CONNECT APPLICATION INDEX A		
		SEALED	54201051N	C 04707404	N/A	DIRECT CONNECT APPLICATION INDEX A		

C - CHRYSLER F - FORD
FCI - FRAMATOME CONNECTORS INTERNATIONAL
YNA - YAZAKI NORTH AMERICA
JD - JOHN DEERE LF - LITTLE FUSE

VENDOR	VENDOR CODE	CHRYSLER P/N
FCI	52772 OR 52772 H	SEE CHART

CHART - ASSEMBLY PART NUMBERS

(Columns of the printed chart listed as rows; item columns give the REQUIRED marks for each item row; X = crossed-out cell.)

Group	FCI P/N'S	(CUSTOMER P/N'S)	YNA P/N'S	1 (C 04687756)	1 (C 04687957)	1 (C 04687958)	1 (C 04801111)	1 (C 04687959)	1 (C 04687960)	1 (C 04687962)	1 (C 04868048AA)	2	3	4A	4C	4B	5	6	Temp. class	PCL
UNSEALED W/O CPA	54201000N	X	X	1								1	X	X	X	X	X	X	3	U
UNSEALED W/O CPA	54201001N	X	X		1							1	X	X	X	X	X	X	3	U
UNSEALED W/O CPA	54201002N	X	X			1						1	X	X	X	X	X	X	3	U
UNSEALED W/O CPA	54201004N	X	X					1				1	X	X	X	X	X	X	3	U
UNSEALED W/O CPA	54201003N	X	X						1			1	X	X	X	X	X	X	3	U
UNSEALED W/O CPA	54201005N	X	X							1		1	X	X	X	X	X	X	3	U
UNSEALED W/CPA	54201000	C 04687900	7283-4606-30	1								1	X	X	X	X	X	1	3	U
UNSEALED W/CPA	54201001	C 04687901	7283-4802-40		1							1	X	X	X	X	X	1	3	U
UNSEALED W/CPA	54201002	C 04687902	7223-1109-60			1						1	X	X	X	X	X	1	3	U
UNSEALED W/CPA	54201004	C 04687903	7283-4807-50					1				1	X	X	X	X	X	1	3	U
UNSEALED W/CPA	54201003	C 04687904	7283-4808-60						1			1	X	X	X	X	X	1	3	U
UNSEALED W/CPA	54201005	C 04687905	7283-4809-90							1		1	X	X	X	X	X	1	3	U
SEALED W/CPA	54201009	C 04687894	7223-1605-30	1								1	1	1			1	1	3	U
SEALED W/CPA	△F856900	N/A	N/A	1								1	1		1		1	1	3	V
SEALED W/CPA	54201010	C 04687895	7283-4605-40		1							1	1	1			1	1	3	U
SEALED W/CPA	△F956900	N/A	N/A		1							1	1		1		1	1	3	V
SEALED W/CPA	54201012	C 04687896	7283-4803-60			1						1	1	1			1	1	3	U
SEALED W/CPA	△F066900	N/A	N/A				1					1	1		1		1	1	3	V
SEALED W/CPA	54201014	C 04687897	7283-4804-50					1				1	1	1			1	1	3	U
SEALED W/CPA	54201013	C 04687898	7283-4805-60						1			1	1	1			1	1	3	U
SEALED W/CPA	54201015	C 04687899	7283-4806-90							1		1	1	1			1	1	3	U
SEALED W/CPA	54201011	C 04801117	7283-4607-10				1					1	1	1			1	1	3	U
SEALED W/CPA	*54201023	C *C04801112	7223-1609-40				1					1	1	*			*	1	3	U
SEALED W/CPA	54201043	C 04868049AA	7283-4609-80								1	1	1	1			1	1	3	U
SEALED W/CPA	*54201054	C *C04759589AA	7283-4901-30	1								1	1	*			*	1	3	U
SEALED W/CPA	*54201062	N/A	7283-4450-60			1						1	1	*			*	1	3	U
SEALED W/CPA	*54201063	N/A	7283-4451-80								1	1	1	*			*	1	3	U
SEALED W/CPA	54201067	F 4G7V-99277-AA	N/A	1								1	1	1			1	1	3	U
SEALED W/CPA	F961010				1							1	1		*		*	1	3	W
SEALED W/CPA	F071010						1					1	1		*		*	1	3	W
SEALED W/O CPA	*54201022N	C *C04707443	7283-4801-30	1								1	1	*			*	X	3	U
SEALED W/O CPA	54201056N	N/A	7283-4608-30	1								1	1	1			1	X	3	U
SEALED W/O CPA	F671310	N/A	N/A		1							1	1			1	1	X	3	X
SEALED W/O CPA	54201051N	C 04707404	7283-4354-30	1								1	1			1	1	X	3	U
SEALED W/O CPA	*54201064N	N/A	7283-4452-60			1						1	1	*			*	X	3	U
SEALED W/O CPA	*54201065N	N/A	7283-4453-80								1	1	1	*			*	X	3	U
SEALED W/O CPA	54201010N	X	X		1							1	1	1			1	X	3	U
SEALED W/O CPA	54201012N	X	X			1						1	1	1			1	X	3	U
SEALED W/O CPA	54201014N	X	X					1				1	1	1			1	X	3	U
SEALED W/O CPA	54201013N	X	X						1			1	1	1			1	X	3	U
SEALED W/O CPA	54201015N	X	X							1		1	1	1			1	X	3	U
SEALED W/O CPA	54201011N	X	X				1					1	1	1			1	X	3	U
SEALED W/O CPA	*54201023N	X	X				1					1	1	*			*	X	3	U
SEALED W/O CPA	54201043N	X	X								1	1	1	1			1	X	3	U

UNSEALED: 22AWG TO 10AWG (Ø1.50 TO Ø4.09) — SEALED W/CPA: SEE NOTES — F671310: PLUG — SEALED W/O CPA: SEE NOTES

ITEM	CUSTOMER P/N	FCI P/N	PART NAME	MATERIAL
1	C 04687756	54201026	INSULATOR - FEMALE INDEX A; BLK	PA66 GF
1	C 04687957	54201027	INSULATOR - FEMALE INDEX B; LT GRY	PA66 GF
1	C 04687958	54201028	INSULATOR - FEMALE INDEX C; LT GRN	PA66 GF
1	C 04801111	54201029	INSULATOR - FEMALE INDEX C; DK GREY	PA66 GF
1	C 04687959	54201030	INSULATOR - FEMALE INDEX D; ORG	PA66 GF
1	C 04687960	54201031	INSULATOR - FEMALE INDEX E; DK GRN	PA66 GF
1	C 04687962	54201032	INSULATOR - FEMALE INDEX F; AQUA	PA66 GF
1	C 04868048AA	54201033	INSULATOR - FEMALE INDEX G; LT BROWN	PA66 GF
2	C 04687741	54201019	WEDGE FEMALE; ROYAL BLUE	PA66 GF
3	C 04687736	54201049	RING SEAL; RED	SILICONE
4A	C 04687963	54201050	END SEAL; DK BLUE (INS. RANGE Ø 1.70 - Ø 3.35)	SILICONE
4C	N/A	C755900	END SEAL; WHITE (INS. RANGE Ø 1.90 - Ø 3.70)	SILICONE
4B	(I/C 93008013)	54201052	END SEAL; BRIGHT YELLOW (NO HOLES)	SILICONE
5	C 04687750	54201021	RETAINER; BLACK	PA66 GF
6	C 04687739	54200003	CPA LATCH; RED	PA66 GF

CONNECTOR ASSEMBLY TEMPERATURE CLASS PER SAE/USCAR-2 REV 5
PART CHANGE LEVEL (PCL)

*END SEAL FCI P/N 54201050 OR F755900 AND RETAINER P/N 54201021 OR HINGE TYPE PROVIDED LOOSE PIECE AND INSTALLED AT HARNESS ASSEMBLY. SEE HARNESS ASSEMBLY DRAWING FOR END SEAL AND RETAINER (STANDARD OR HINGE TYPE) PART NUMBERS

△ INDICATES THIS PART AVAILABLE THROUGH TTI

ECN-NO.	ZONE	CHANGE DESCRIPTION
11-00153	B-C9	MATERIAL PA66 GF WAS PA66GF35, TITLE BLOCK UPDATED PCL NOT AFFECTED, P/N F671310 ADDED IN CHART
11969	D16 D14	RECORD CHANGE UPDATED FOR P/N'S F856900, F956900 & F066900 WERE ADDED AT REV."V" WAS MISSED DURING PDS CONVERSION. THE PCL OF P/N'S F961010 & F071010 WILL STAY AT "W", BALLOONS ADDED FOR INSPECTION AND NOTES UPDATED
11800	ALL	ASSEMBLY P/N'S F961010, F071010 ADDED, NOTES AND CHARTS UPDATED, INSULATION RANGE ADDED, REVISED AND REDRAWN IN PDS

PRODUCT SPEC.: APEX 2.80MM — PACKAGING SPEC.: - — APPLICATION SPEC.: -

THIS DRAWING AND ALL OTHER INFORMATION CONTAINED THEREIN IS PROPRIETARY AND THE PROPERTY OF FCI.This drawing may not be copied, reproduced or disclosed to any third party without the expressed written permission of FCI.FCI April©1999

TOLERANCES: 1 PLACE DIM ± 0.25, 2 PLACE DIM ± 0.10, ANGULAR DIM ± 2°
COUNTERPART Nr.: H58015, G36010
DO NOT MEASURE DRAWING
MATERIAL: SEE CHART — SURFACE FINISH: -
COLOUR: SEE CHART — -
TOOL NO.: A-039 — ECO Loc. Code: AN
3RD ANGLE — DIMENSION IN MILLIMETERS
CAD SYSTEM: pro / eng. — DWG SIZE: A0 — APPROVAL LEVEL: - — SHEET 1 of 1 — SCALE 2:1

	DATE	NAME
CREATED BY	2007-03-28	SUCHA SIAN
MODIFIED BY	2012/02/09	Sucha SIAN
CHECKED BY	2012/02/15	Bob CUE
APPROVED BY	2012/02/15	Jeff CAMPBELL

FILE NAME: H59005

TITLE: CHART - ASSEMBLY 10WAY FEMALE (SEALED & UNSEALED)
PROJECT: 2.80MM APEX CONNECTOR SYSTEM
ESR NO.: USA-WT204, 6243 — CAT. NO.: -
DOCUMENT UNDER PDS CONTROL NO MODIFICATION ALLOWED OUTSIDE
DRAWING NUMBER: H59005 — REV.: X
STATE: SERIAL RELEASED
PART NUMBER: See Table — REV.: -

EUR C04 112 F29 PDS