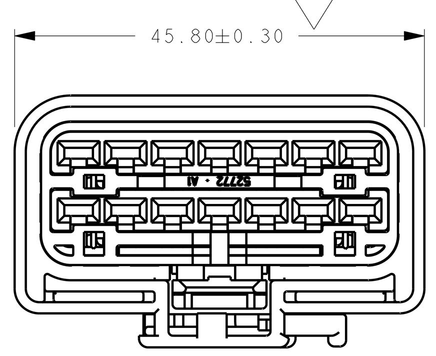

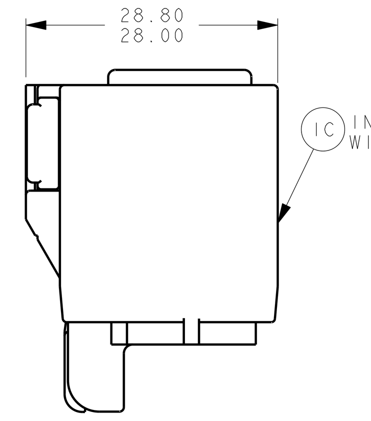

SIDE VIEW
W/O FINGER GRIP

15 LAST 6 DIGITS OF P/N & PART CHANGE LEVEL (PCL) MFG. DAILY DATE CODE & ASSY. MACHINE # LETTERING MUST BE LEGIBLE OPTIONAL

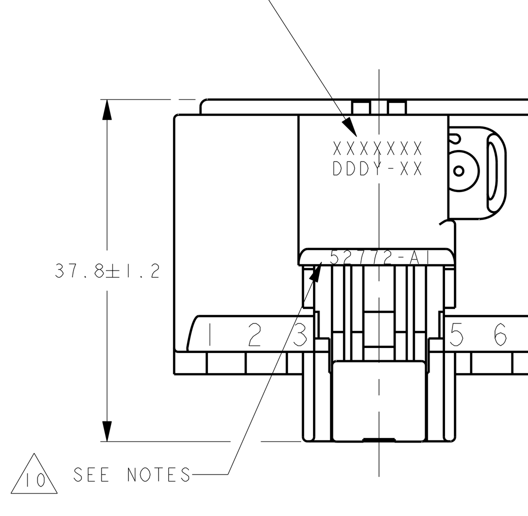

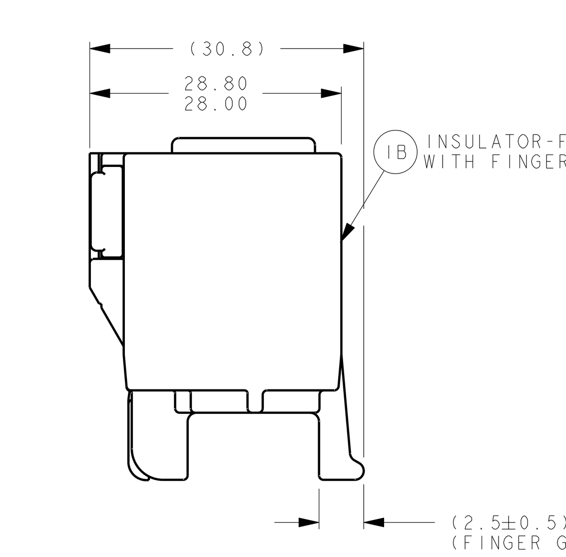

UNSEALED
ASSEMBLY VIEWS
(SKIRTLESS)

SIDE VIEW
WITH FINGER GRIP

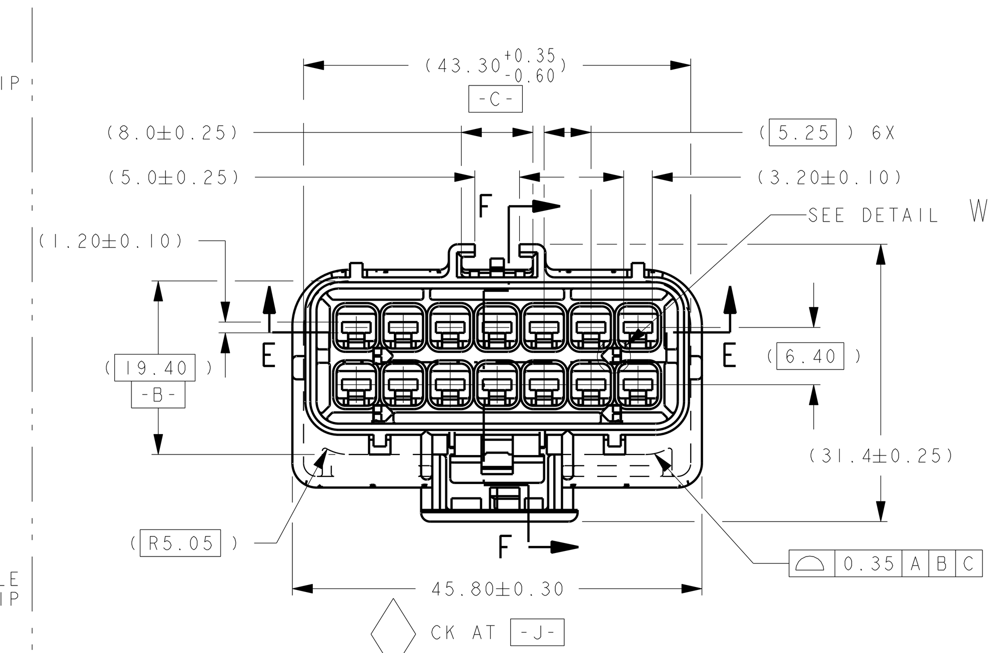

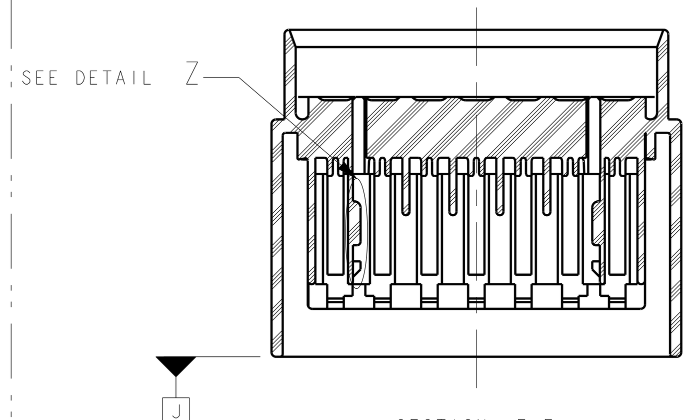

SECTION E-E

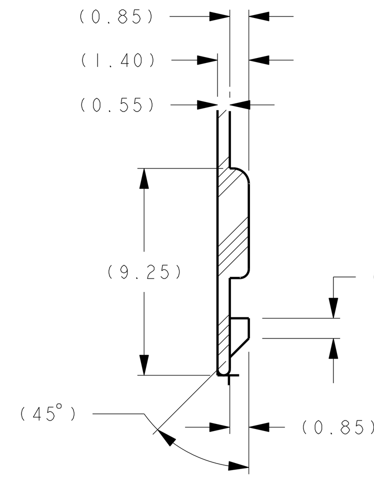

DETAIL Z
SCALE 5X
2 PLACES AS SHOWN
2 PLACES SYM. OPP.

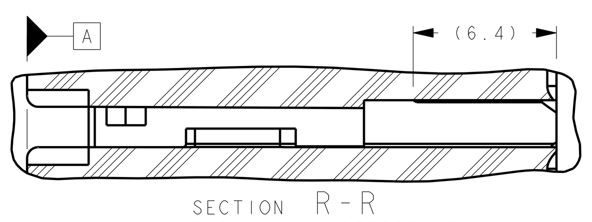

SECTION R-R
SHOWN FOR VISUAL REFERENCE
OF THIN LINE (6.4) BREAK AREA

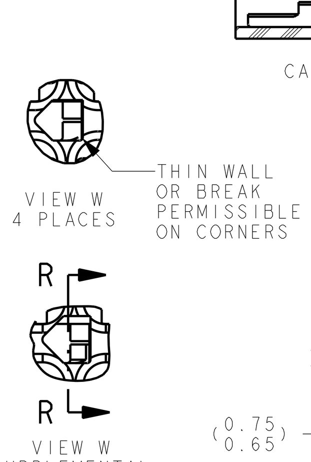

VIEW W
4 PLACES

VIEW W
SUPPLEMENTAL

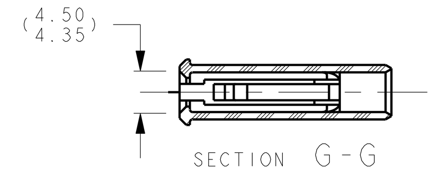

SECTION G-G

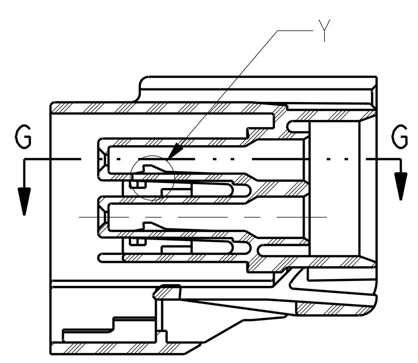

CAVITY DETAIL VIEW
SECTION F-F

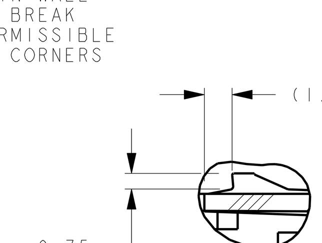

VIEW Y
TERM. LOCK, FINGER
SCALE 5X

SEALED
INSULATOR VIEWS
FOR REFERENCE ONLY

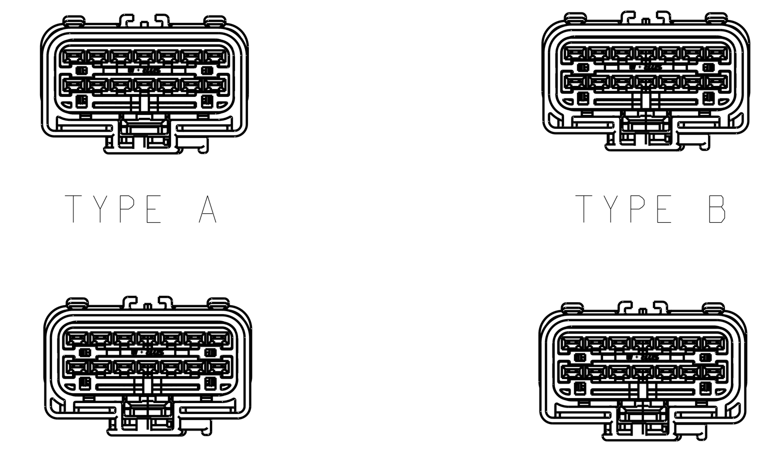

POLARIZATION OPTIONS
FULL SIZE
SHOWN WITH CPA

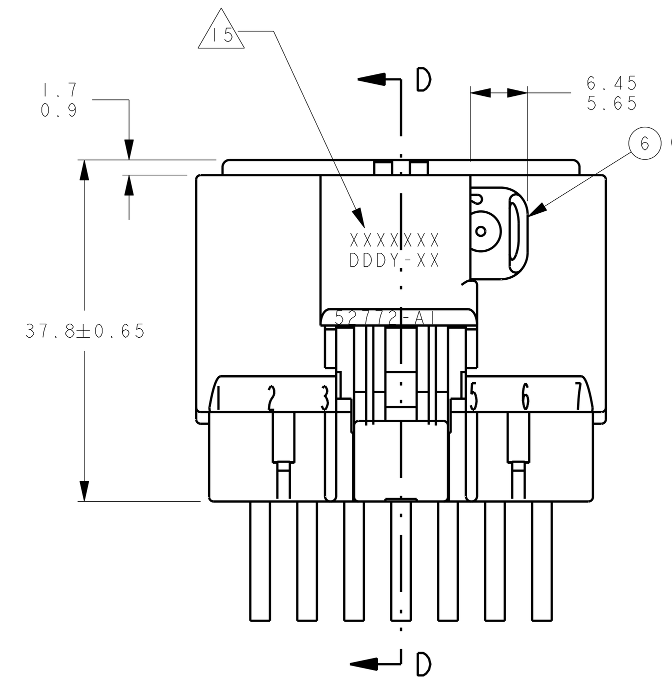

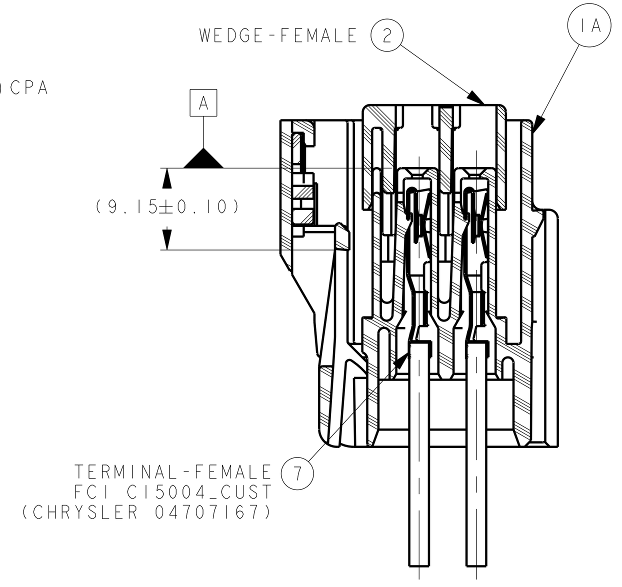

SECTION D-D

UNSEALED ASSEMBLY VIEW
SEE PART NUMBER CHART

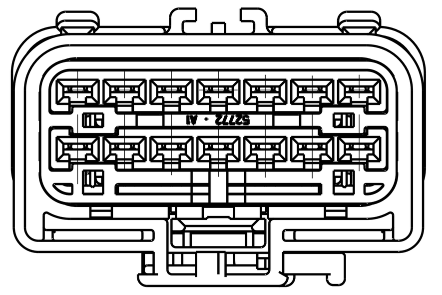

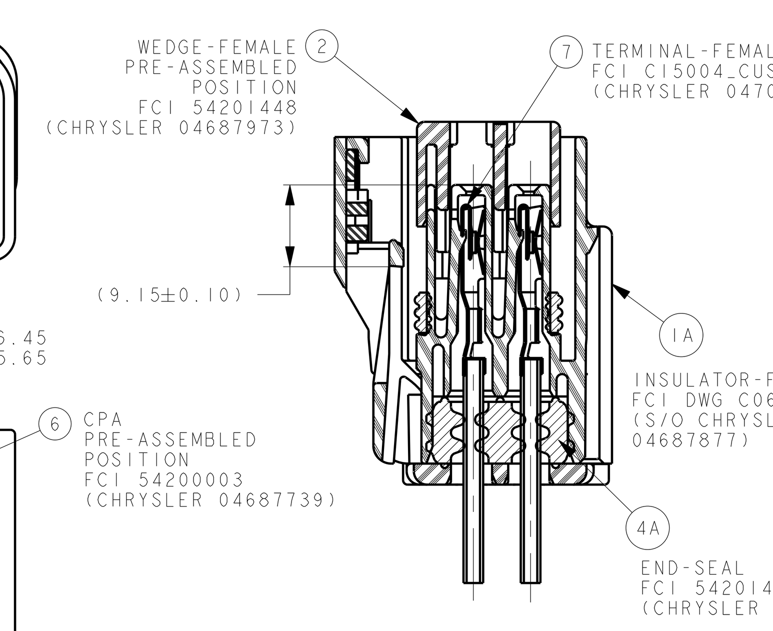

SECTION A-A

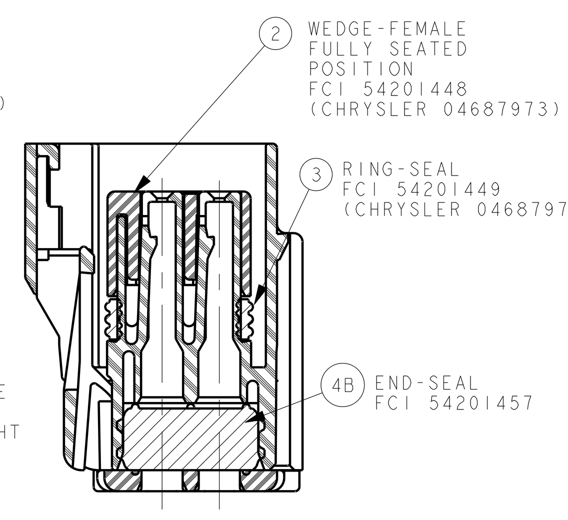

SECTION A-A
FOR P/N 54201445N

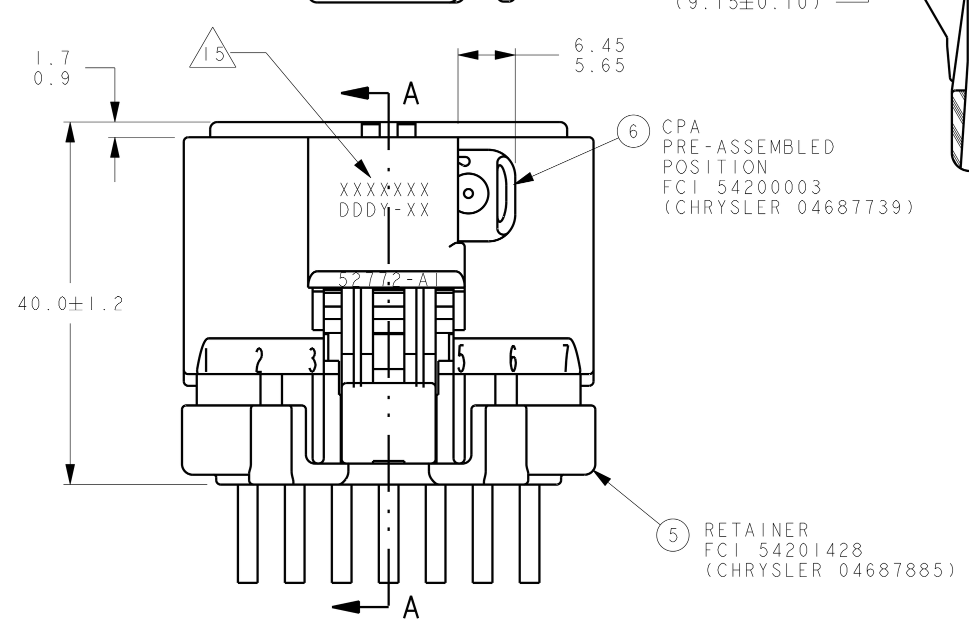

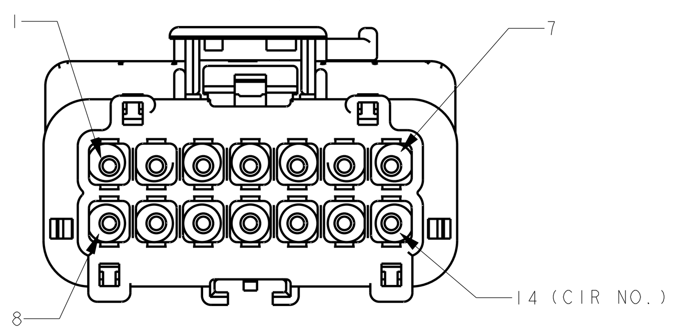

SEALED ASSEMBLY VIEWS
SEE PART NUMBER CHART

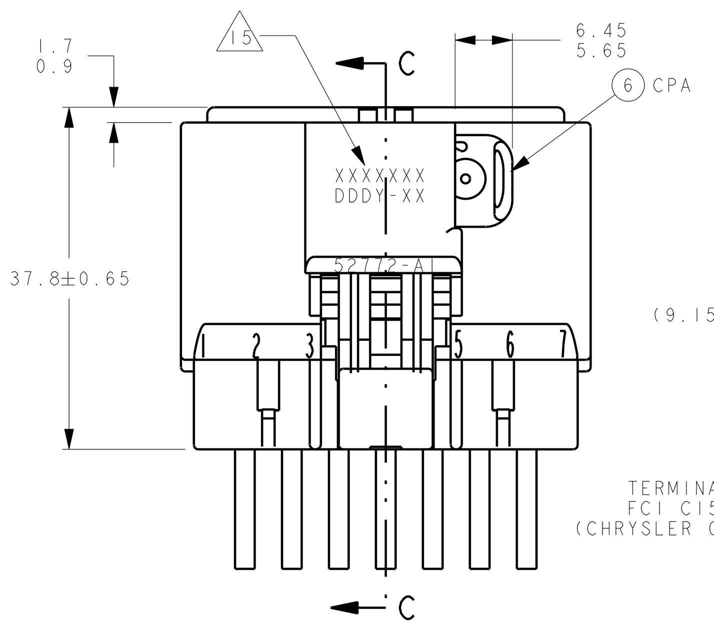

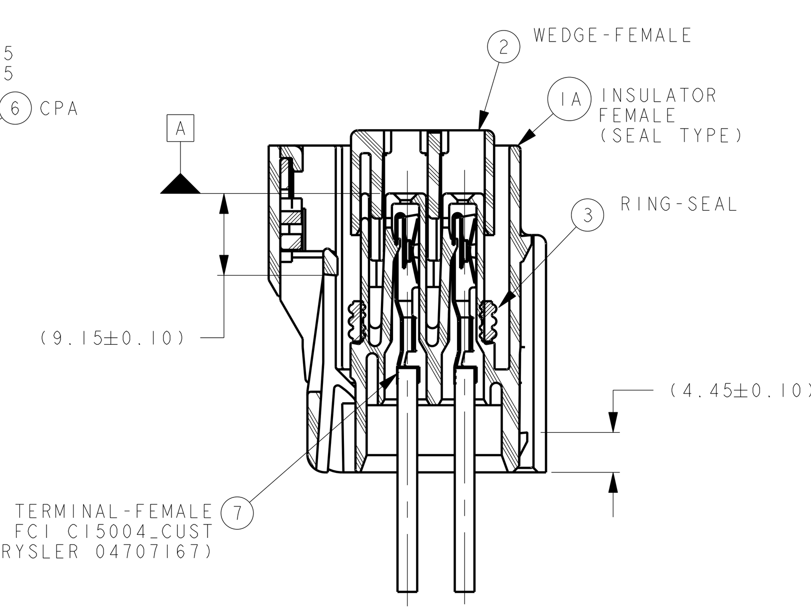

SECTION C-C

SEALED ASSEMBLY VIEW
(PARTIALLY SEALED)
SHIPPED WITHOUT END SEAL AND RETAINER

NOTES:

1. QUALITY ASSURANCE REQUIREMENTS PER CHRYSLER PS-7300:1 ◇ SPC DATA REQUIRED

2. ENGINEERING APPROVAL OF SUPPLIER SAMPLES IS REQUIRED PRIOR TO AUTHORIZATION OF PART PRODUCTION

3. CHANGES IN DESIGN COMPOSITION OR PROCESSING FROM THE PART PREVIOUSLY APPROVED FOR PART PRODUCTION REQUIRES PRIOR ENGINEERING APPROVAL

4. WIRING FABRICATORS MUST PURCHASE FROM SOURCES SHOWN

5. ALL THE SEALED APPLICATIONS WITH 54201450 END SEAL MUST BE USED WITH CHRYSLER WIRE SPEC. MS-8288 OR MS-9502 THIN WALL X-LINK 20,18, 16, 14 & 12 GAGE WIRES ONLY UNLESS OTHERWISE SPECIFIED (INSULATIONS Ø1.70 MIN TO Ø3.35 MAX.) ISO THIN WALL EQUIVALENTS ALLOWED

5A. P/N'S WITH C855900 END SEAL MUST BE USED WITH WIRE INSULATION RANGE FROM Ø1.90MIN TO 3.70MAX (18AWG TO 12AWG OR $1mm^2$ TO $4mm^2$ ISO THIN WALL)

6. ALL NON-SEALED APPLICATIONS MAY BE USED WITH ANY WIRE INSULATION 22 GAGE THRU 10 GAGE & ISO THIN WALL EQUIVALENTS PROVIDING THAT A TERMINAL GRIP FOR THAT CORE / INSULATION COMBINATION IS SHOWN ON THE FEMALE TERMINAL DRAWING

   MAX. INSULATION CRIMP WIDTH = 4.50
   MAX. INSULATION CRIMP HEIGHT = 4.50
   MAX. INSULATION DIA. =4.09 (10 GA THIN WALL)

7. USE WITH CAVITY PLUG FCI P/N 54200005 (C) 56038308 ON SKIRTED PARTS ONLY WHEN REQUIRED
USE WITH DOUBLE X-MAS TREE CLIP P/N (C) 04707091 WHEN REQUIRED
USE WITH DOUBLE X-MAS TREE CLIP P/N (C) 04625797 WHEN REQUIRED
USE WITH 2.80MM APEX FEMALE TERMINAL PER C15004-CUST
SYMMETRICAL ABOUT CENTERLINE FOR 180° ORIENTATION

8. DIRECT CONNECT DRAWING NO. H36014 (CHRYSLER 04707029)

9. TEST METHOD PER CHRYSLER PERFORMANCE SPEC# SAE/USCAR-2 REV 5. CONNECTOR ENGAGE & DISENGAGE WITH LATCH DEPRESSED FORCE NOT TO EXCEED 142N FOR THIS SYSTEM.

PRESSURE 3 PSI (22 KPA) PER PF-752(T)

CPA SEATING FORCES - 40N MAX

WEDGE SEATING FORCES - 142N MAX

X-MAS TREE CLIP INSERTION FORCES - 75N MAX

10. SUPPLIER, MOLD & CAVITY I.D SINGIFIES TOOL OWNERSHIP, FOR REFERENCE

11. ANNUAL QUALITY REQUIREMENTS:
IT IS PERMISSBLE TO PERFORM CONTINUOUS CONFORMANCE PER FCI SPECIFICATION #AQA-001 INSTEAD OF ANNUAL LAYOUT & ANNUAL PV REQUIREMENTS OF QS-9000 SECTION 2 & SAE/USCAR-2 REV 5

ALL NON-REFERENCE DIMENSIONS ARE REQUIRED

- USE INDEX A, BLACK SEALED AND UNSEALED FOR ALL AFFECTED INSULATOR CAVITIES
- CURRENT PRODUCTION TOOLING
- POINT OF LAST RUN

SERVICE TOOLING GUIDE INFORMATION PER APEX TRAINING MANUAL

12. MUST CONFORM TO THE FOLLOWING CHRYSLER/YNA STANDARDS:

SAE/USCAR-2 REV-5 EXCEPT AS NOTED ABOVE
PS-7300 QUALITY ASSURANCE (CHRYSLER)
PS-4480-CEK-4 (CHRYSLER) PART I.D., (G-009-2 YNA)
PS-9065 REGRIND (CHRYSLER), (G-009-3 YNA)
PS-9227 DATA EXCHANGE (CHRYSLER), (G-009-7 YNA)
PS-10052 INFORMATION SECURITY (CHRYSLER)

13. THIS DRAWING (H59008) REPLACES CHRYSLER DRAWING NUMBER 04687876 LEVEL "N" CHRYSLER DRAWING IS FOR REFERENCE ONLY

14. FCI P/N'S WITH SUFFIX "N" DESIGNATES ASSEMBLIES W/O CPA

15. SEE ZONE N21 FOR PART IDENTIFICATION CALL OUT

* INDICATES END SEAL 54201450 OR C855900 & RETAINER 54201428 OR HINGE TYPE PROVIDED LOOSE PIECE AND INSTALLED AT WIRE HARNESS ASSEMBLY, SEE HARNESS ASSEMBLY FOR HINGE RETAINER P/N

MATING PART NUMBER CHART

INDEX TYPE	COLOR	SEALED / UNSEALED	FCI	CUSTOMER	OTHER CUSTOMERS	FCI	CHRYSLER	OTHER CUSTOMERS
			FEMALE ASSEMBLY PART NUMBERS			(MATING ASSEMBLY PART NUMBERS)		
D	LT GREEN	UNSEALED	54201452N	N/A	N/A	DIRECT CONNECT APPLICATION INDEX D		
		UNSEALED	54201452	(C) 04868345AA	N/A	DIRECT CONNECT APPLICATION INDEX D		
	NATURAL	UNSEALED	54201467	N/A	N/A	54201468	N/A	N/A
		UNSEALED	54201403N	N/A	N/A	DIRECT CONNECT APPLICATION INDEX D		
		UNSEALED	54201403	(C) 04687932	YNA 7283-4649	DIRECT CONNECT APPLICATION INDEX D		
		SEALED	54201414N	N/A	N/A	54201418	N/A	N/A
		SEALED	54201414	(C) 04687928	YNA 7283-4749	54201418	(C) 04707243	N/A
C	DK GREY	UNSEALED	54201402N	N/A	N/A	DIRECT CONNECT APPLICATION INDEX C		
		UNSEALED	54201402	(C) 04687931	YNA 7283-4648-10	DIRECT CONNECT APPLICATION INDEX C		
		SEALED	54201413N	N/A	N/A	54201417	N/A	N/A
		SEALED	F371010	N/A	N/A	JOHN DEERE LITTLE FUSE LOAD CENTER		
		SEALED	△ F366900	N/A	N/A	DIRECT CONNECT APPLICATION INDEX C		
		SEALED	54201413	(C) 04687927	YNA 7283-4748-10	54201417	(C) 04707241	N/A
B	LT GREY	UNSEALED	54201453N	N/A	N/A	DIRECT CONNECT APPLICATION INDEX B		
		UNSEALED	54201453	N/A	YNA 7283-4747-40	DIRECT CONNECT APPLICATION INDEX B		
		UNSEALED	54201401N	N/A	N/A	54201405	N/A	N/A
		UNSEALED	54201401	(C) 04687930	YNA 7283-4647-40	54201405	(C) 04687936	N/A
		SEALED	54201412N	N/A	N/A	54201416	N/A	N/A
		SEALED	F271010	N/A	N/A	JOHN DEERE LITTLE FUSE LOAD CENTER		
		SEALED	△ F266900	N/A	N/A	DIRECT CONNECT APPLICATION INDEX B		
		SEALED	54201412	(C) 04687926	YNA 7283-4645-40	54201416	(C) 04687934	N/A
A	BLACK	UNSEALED	54201442N	N/A	N/A	54201404	N/A	N/A
		UNSEALED	54201442	(C) 04868197AA	N/A	54201404	(C) 04687935	N/A
		UNSEALED	54201400N	N/A	N/A	54201404	N/A	N/A
		UNSEALED	54201400	(C) 04687929	YNA 7283-4644-30	54201404	(C) 04687935	N/A
		SEALED	54201411	(C) 04687925	YNA 7283-4641-30	54201415	(C) 04867933	N/A
		SEALED	54201419N	(C) *04707442	YNA 7283-4746-30	54201415	(C) 04867933	N/A
		SEALED	54201443	(C) *04759591AA	YNA 7283-4341-30	54201415	(C) 04867933	JD/LF LOAD CENTER
		SEALED	54201445N	(C) 04707405	N/A	54201415	(C) 04867933	N/A
		SEALED	△ F166900	N/A	N/A	DIRECT CONNECT APPLICATION INDEX A		
		SEALED	54201456N	N/A	(GM) 15125222	N/A	N/A	(GM) 15125233

FCI - FRAMATOME CONNECTORS INTERLOCK
YNA - YAZAKI NORTH AMERICA
(C) - CHRYSLER (GM)- GENERAL MOTORS
(JD)- JOHN DEERE (LF)- LITTLE FUSE

ASSEMBLY PART NUMBERS

	UNSEALED																SEALED																				
	W/O CPA							W/CPA									W/CPA										W/O CPA										
OTHER CUST P/N'S	N/A	N/A	N/A	N/A	N/A	N/A	N/A	N/A	YNA 7283-4747-40	N/A	N/A	YNA 7283-4644-30	YNA 7283-4647-40	YNA 7283-4648-10	YNA 7283-4649	N/A	YNA 7283-4641-30	N/A	YNA 7283-4645-40	N/A	YNA 7283-4748-10	N/A	YNA 7283-4749	YNA 7283-4341-30	N/A	N/A	YNA 7283-4746-30	N/A	(GM) 15125232	N/A	N/A	N/A					
(CUSTOMER P/N'S)								N/A	N/A	(C) 04868345AA	(C) 04868197AA	(C) 04687929	(C) 04687930	(C) 04687931	(C) 04687932	N/A	(C) 04687925	N/A	(C) 04687926	N/A	(C) 04687927	N/A	(C) 04687928	(C) *04759591AA	N/A	N/A	(C) *04707442	(C) 04707405	N/A	N/A	N/A	N/A					
FCI P/N'S	54201453N	54201452N	54201442N	54201400N	54201401N	54201402N	54201403N	54201472	54201453	54201452	54201442	54201400	54201401	54201402	54201403	54201467	54201411	△ F166900	54201412	△ F266900	54201413	△ F366900	54201414	*54201443	*F271010	*F371010	*54201419N	54201445N	54201456N	54201412N	54201413N	54201414N					
	REQUIRED																REQUIRED																ITEM	FCI P/N	CHRYSLER P/N	PART NAME	MATERIAL
			1								1						1	1						1			1	1	1				1A	54201432	(C) 04687804	SEALED, INDEX A; BLACK	PA66 GF35
	1								1										1	1					1					1			1A	54201433	(C) 04687954	SEALED, INDEX B; LT GRY	PA66 GF35
																					1	1				1					1		1A	54201434	(C) 04687955	SEALED, INDEX C; DK GRY	PA66 GF35
																							1									1	1A	54201435	(C) 04687956	SEALED, INDEX D; NATURAL	PA66 GF35
				1								1																					1B	54201420	(C) 04707291	UNSEALED, INDEX A; BLK W/FINGER GRIP	PA66 GF35
					1			1					1																				1B	54201421	(C) 04707292	UNSEALED, INDEX B; LT GRY W/FINGER GRIP	PA66 GF35
						1								1																			1B	54201422	(C) 04707293	UNSEALED, INDEX C; DK GRY W/FINGER GRIP	PA66 GF35
							1								1																		1B	54201423	(C) 04707294	UNSEALED, INDEX D; NATURAL W/FINGER GRIP	PA66 GF35
		1								1																							1C	54201451	N/A	UNSEALED, INDEX D; LT GRN W/O FINGER GRIP	PA66 GF35
																1																	1C	54201466	N/A	UNSEALED, INDEX D; NATURAL W/O FINGER GRIP	PA66 GF35
	1	1	1	1	1	1	1		1	1	1	1	1	1	1	1	1	1	1	1	1	1	1	1	1	1	1	1	1	1	1	1	2	54201448	(C) 04687973	WEDGE-FEMALE;ROYAL BLUE	PA66 GF36
																	1	1	1	1	1	1	1	1	1	1	1	1	1	1	1	1	3	54201449	(C) 04687972	RING SEAL;RED	SILICONE
																	1		1		1		1	*			*		1	1	1	1	4A	54201450	(C) 04687952	END SEAL;LIGHT BLUE (INSULATION RANGE Ø1.70 - Ø3.35)	SILICONE
																												1					4B	54201457	(**93008014)	END SEAL;BRT YELLOW (WITHOUT HOLES)	SILICONE
																		1		1		1			*	*							4C	C855900	N/A	END SEAL; WHITE (INSULATION RANGE Ø1.90 - Ø3.70)	SILICONE
																	1		1		1		1	*	*	*	*	1	1	1	1	1	5	54201428	(C) 04687948	RETAINER;BLACK	PA66 GF35
								1	1	1	1	1	1	1	1	1	1		1		1		1	1	1	1							6	54200003	(C) 04687739	CPA LATCH;RED	PA66 GF35
	3	3	3	3	3	3	3	3	3	3	3	3	3	3	3	3	3	3	3	3	3	3	3	3	3	3	3	3	3	3	3	3	CONNECTOR ASSEMBLY TEMPERATURE CLASS PER SAE/USCAR-2 REV 5				
	T	T	T	T	T	T	T	U	T	T	T	T	T	T	T	T	T	V	T	V	T	V	T	T	W	W	T	T	T	T	T	T	PART CHANGE LEVEL (PCL)				
	20 TO 10 AWG (Ø1.50 TO Ø4.09)																SEE NOTES										PLUG	SEE NOTES									

** INTERLOCK P/N
△ INDICATES P/N AVAILABLE THROUGH TTI

ECN-NUMBER	DATE M-D-YY	REVISION	ZONE	CHANGE DESCRIPTION	DRAWN BY	CHK. BY	APPR. BY
11802	02-08-11	W	ALL	ASSEMBLY P/N'S F271010, F371010 ADDED, NOTES AND CHARTS UPDATED, INSULATION RANGE ADDED AND REVISED	SR	SSS	SSS
11748	11-22-10	V	ALL	ASSEMBLY P/N'S F166900, F266900, F366900 AND END SEAL P/N C455900 ADDED, NOTES AND CHARTS UPDATED, VIEW SHOWING PERMISSIBLE THIN LINE BREAK ON CAVITY WALLS	SR	SSS	SSS
10368	05-14-08	U	D16 N14	P/N 54201472 ADDED FOR LIGHT GRAY INSULATOR AND CPA SUB-ASSEMBLY,45.80±0.30 WAS ±0.25	RA	SSS	SSS
10013	11-12-07	T1	N21 P19	OVERALL LENGTH & WIDTH DIMS UPDATED TO MATCH WITH MFG DWG. DCA CHANGED TO CHRYSLER USE W/2.8MM APEX TERM ADDED IN NOTES	RA	SSS	SSS
9710	07-31-07	T	ALL	REDRAWN ON NEW FCI TITLE BLOCK SEE REV "S1" FOR PREVIOUS CHANGES	DRK	SSS	SSS

FCI	52772 OR 52772H	SEE CHART
VENDOR	VENDOR CODE	P/N

PRODUCT SPEC. APEX 2.8MM | PACKAGING SPEC. - | APPLICATION SPEC. -

THIS DRAWING AND ALL OTHER INFORMATION CONTAINED THEREIN IS PROPRIETARY AND THE PROPERTY OF FCI. This drawing may not be copied, reproduced or disclosed to any third party without the expressed written permission of FCI. © FCI April 1999

TOLERANCES 1 PLACE ±0.25 2 PLACE ±0.10 ANGULAR ±2° | MATERIAL : SEE CHART | SURFACE FINISH -
COUNTERPART NO. H59008, K09001, G36014 | COLOR : -
DO NOT SCALE DRAWING | TOOL NO. A-040 | ECO Loc. Code NA
3RD ANGLE | CAD SYSTEM pro / eng. | DWG SIZE A0 | DIMENSION IN MILLIMETERS

	DATE	NAME
DRAWN BY	07-21-07	RAJKUMAR
CHECKED BY	07-21-07	SUCHA SIAN
APPROVED BY	07-21-07	SUCHA SIAN

TITLE CHART-ASSEMBLY
14-WAY FEMALE SEALED & UNSEALED
2.80MM APEX CONNECTOR SYSTEM

ESR NO. WT225/6243 | CAT. NO. - | FILE NAME H59008

DRAWING NUMBER H59008 | SHEET 1 of 1 | SCALE 2:1