("LEVER CLOSED & TPA OPEN")
DELIVERY CONDITION
FROM FCI TO HARNESS MAKER

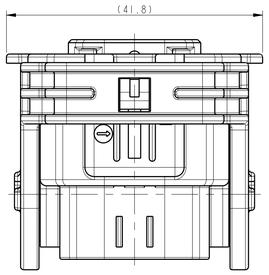

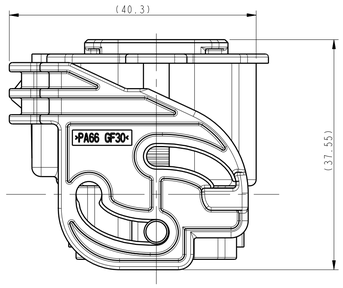

("LEVER OPEN & TPA CLOSED")
DELIVERY CONDITION
FROM HARNESS MAKER TO ASSEMBLY LINE

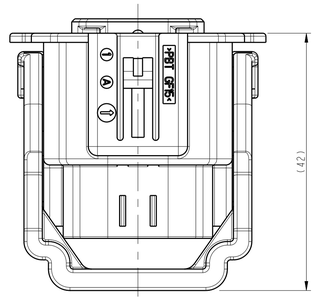

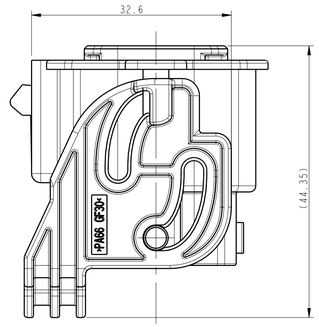

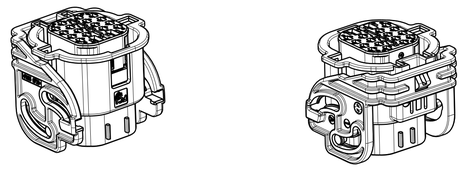

SCALE 1:1
ISOMETRIC VIEW

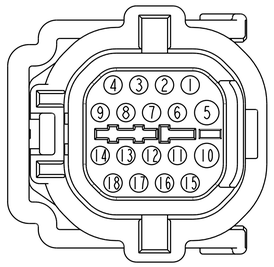

SYMBOL

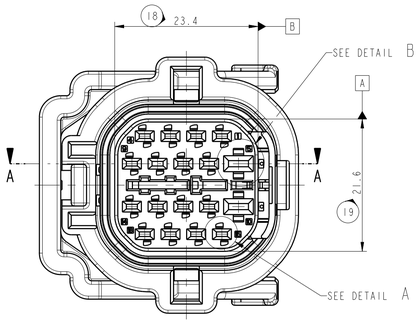

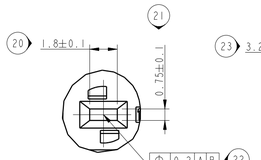

DETAIL A
SCALE 5:1

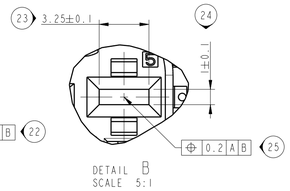

DETAIL B
SCALE 5:1

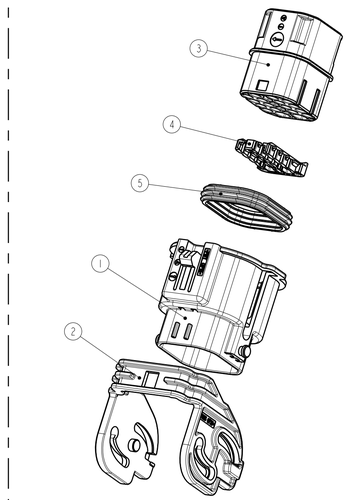

SCALE 1:1
EXPLODED VIEW

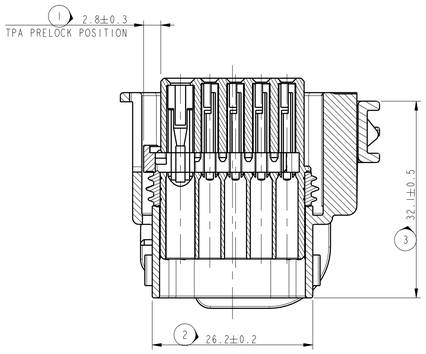

SECTION A-A

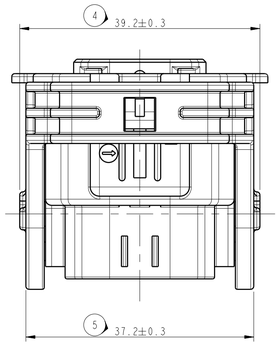

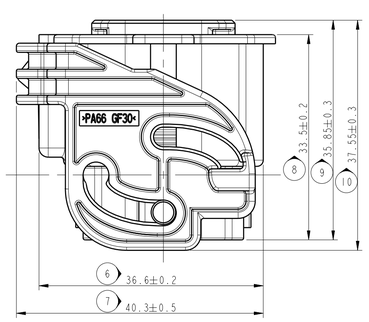

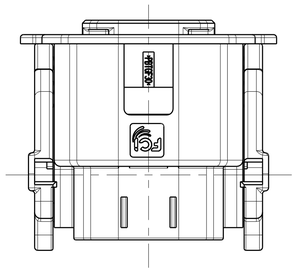

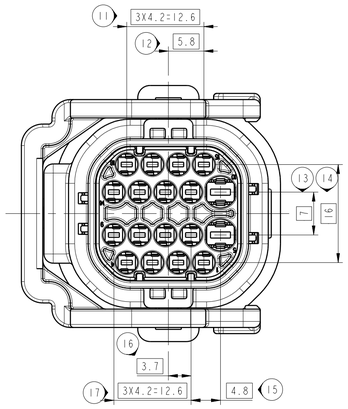

DIN ISO 2768	Tolerance Class medium (m)							
Linear dimensions except for broken edges	Permissible deviations for basic size range (mm)							
	0.5 *) up to 3	over 3 up to 6	over 6 up to 30	over 30 up to 120	over 120 up to 400	over 400 up to 1000	over 1000 up to 2000	
	±0.1	±0.1	±0.2	±0.3	±0.5	±0.8	±1.2	
Broken edges (radii, chamfers)	Permissible deviations for basic size range (mm)							
	0.5 *) up to 3	over 3 up to 6	over 6					
	±0.2	±0.5	±1					
Angular dimensions	Permissible deviations for ranges of lengths, in mm, of the shorter side of the angle concerned.							
	up to 10	over 10 up to 50	over 50 up to 120	over 120 up to 400	over 400			
	±1°	±0°30'	±0°20'	±0°10'	±0°5'			

*) For nominal sizes below 0.5mm, the deviations shall be indicated adjacent to the relevant nominal size(s).

NOTES
1. NOT SPECIFIED TOLERANCE : ISO 2768(M)
2. MUST BE FREE OF CRACK, FLOW MARK, FLASH, BURR ETC THAT AFFECT FUNCTION OF PRODUCT
3. REGARDING CUSTOMER MARK AND FCI MARK, DISCUSS LATER
4. THIS PRODUCT MUST MEET HMC SPEC ES91500-00 Rev g
5. UNLESS OTHERWISE SPECIFIED TO VENDOR SPECIFICATION.
6. APPLICABLE MALE CONNECTOR : 902898-00

ASSOCIATED PARTS

FEMALE TERMINALS		PART NUMBER	WIRE SIZE (mm^2)	TYPE	PART NUMBER	WIRE SIZE (mm^2)	TYPE	
DCK 1.5	Sn PLATED	6 000 20 11	0.20-0.35	0.6x1.5		0.20-0.35	0.6x1.5	
DCK 1.5	Au PLATED	6 000 20 14		0.6x1.5			0.6x1.5	
DCK 1.5	Sn PLATED	6 000 20 31	0.50-1.00	0.6x1.5		0.50-1.00	0.6x1.5	
DCK 1.5	Au PLATED	6 000 20 34		0.6x1.5			0.6x1.5	
DCK 2.8	Sn PLATED	6 001 37 41	1.25	0.8x2.8		1.25	0.8x2.8	
DCK 2.8	Sn PLATED	6 001 37 31	0.50-1.00	0.8x2.8		0.50-1.00	0.8x2.8	A01
DCK 1.5mm SWS (red)		6 099 39 13	0.35 ~ 0.5	Insul´Ø1.2~1.6mm		0.35 ~ 0.5	Insul´Ø1.2~1.6mm	
DCK 1.5mm SWS (grey)		6 099 39 28	0.5 ~ 0.85	Insul´Ø1.6~1.9mm		0.5 ~ 0.85	Insul´Ø1.6~1.9mm	
DCK 2.8mm SWS (blue)		6 099 40 15	0.2 ~ 1.0	Insul´Ø1.2~2.0mm		0.2 ~ 1.0	Insul´Ø1.2~2.0mm	
DCK 2.8mm SWS (red/brown)		6 099 40 23	1.0 ~ 1.5	Insul´Ø2.0~2.7mm		1.0 ~ 1.5	Insul´Ø2.0~2.7mm	
CAVITY PLUG for DCK1.5 TERM´L		6 099 39 06	CAVITY PLUG for DCK1.5mm TERM´L			CAVITY PLUG for DCK1.5mm TERM´L		
CAVITY PLUG for DCK2.8 TERM´L		6 099 40 07	CAVITY PLUG for DCK2.8mm TERM´L			CAVITY PLUG for DCK2.8mm TERM´L		A01
DESCRIPTION		FCI PART NUMBER			CUSTOMER PART NUMBER			

REP.	QTY.	DESCRIPTION	MATERIAL	COLOR	FCI P/N	REMARK
5	1	SEAL	Silicone rubber	RED	102577-00	-
4	1	TPA	PBT GF15	Natural	502916-00	0.727
3	1	INNER HOUSING	PBT GF30	BLACK	502915-00	9.105
2	1	LEVER	PA66 GF30	BLACK	502918-00	5.043
1	1	OUTER HOUSING	PBT GF15	Black	502917-00	7.98

SPECIFICATION

FCI : FN 05-001
CUSTOMER : ES91500-00 Rev g

POSITION 위치	CHANGE DESCRIPTION 변경사항
PD08-109	-
	-
	-
	-
	-
	- 0.85 SQmm wire added for DCK 2.8mm terminal

ECN-NO. ECN 번호: KN 05-001
PRODUCT SPEC. 제품 규격
PACKAGING SPEC. 포장 규격: -
APPLICATION SPEC. 사용 규격: -

THIS DRAWING AND ALL OTHER INFORMATION CONTAINED THEREIN IS PROPRIETARY AND THE PROPERTY OF FCI. This drawing may not be copied, reproduced or disclosed to any third party without the expressed written permission of FCI.
© FCI April 1999
이 도면과 여기에 포함된 모든 기타 정보는 FCI의 소유이며 재산이다. 이 도면은 FCI의 분서면 허가 없이 복사, 전달 되거나 어떤 제 3자에게 공개되지 않아야 한다.
© FCI April 1999

TOLERANCES 공 차: ISO 2768(M)
MATERIAL : 재 질 : SEE TABLE
SURFACE FINISH 표면 처리: -
COUNTERPART No. 상대품 품번: 902898-00
COLOUR : 색 상 : SEE TABLE
DO NOT MEASURE DRAWING 도면을 측정하지 말것
TOOL NO. 공구 번호: -
ECO Lev. Code ECO 레벨코드: KN

	DATE 날 짜	NAME 이 름
CREATED BY 작 성		
MODIFIED BY 수 정		
CHECKED BY 검 토		
APPROVED BY 승 인		
FILE NAME 파 일 명	PCC0540161	

TITLE 품 명: 18WAY SEALED FEMALE CONNECTOR
PROJECT 프로젝트명: 6 STEP ATM FPC HARNESS SYSTEM
ESR NO. ECR 번호: AP-075091
CAT. NO. 제품 번호: -
DOCUMENT UNDER PDS CONTROL PDS에 의해 관리되는 문서임.
NO MODIFICATION ALLOWED OUTSIDE 허가없이 수정 사용하지 말음.

DRAWING NUMBER 도 면 번 호: PCC0540161
REV. 개정: A01
STATE 상 태: Serial release
PART NUMBER 제 품 번 호: 903079-00
REV. 개정: A01
THIRD ANGLE 제 각 법
DIMENSION IN MILLIMETERS 치수단위 밀리미터
CAD SYSTEM: pro / eng.
UNC SIZE 도면 크기: A1
APPROVAL LEVEL 승인 수준: -
SHEET 도면수: 1 of 1 장
SCALE 축 척: 2:1