Apacer

RoHS Compliant

M.2 2242 Flash Drive

SH250-M242 BiCS5 Product Specifications

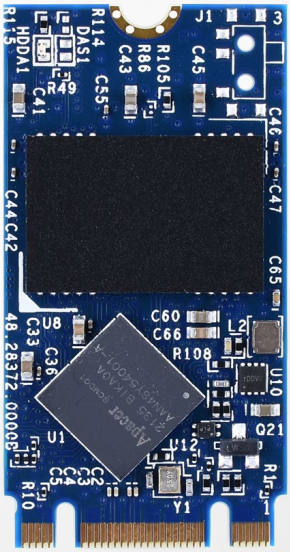

February 2, 2023

Version 1.0

Apacer Technology Inc.

1F, No.32, Zhongcheng Rd., Tucheng Dist., New Taipei City, Taiwan, R.O.C

Tel: +886-2-2267-8000 Fax: +886-2-2267-2261

www.apacer.com

Specifications Overview:

- **Compliance with SATA Revision 3.2**
  - SATA 6 Gb/s interface
  - ATA-8 command set
  - Backward compatible with SATA 1.5/3 Gb/s
- **Capacity**
  - 40, 80, 160, 320 GB
- **Performance**[1]
  - Burst read/write: 600 MB/sec
  - Sequential read: Up to 550 MB/sec
  - Sequential write: Up to 485 MB/sec
  - Random read (4K): Up to 55,000 IOPS
  - Random write (4K): Up to 63,000 IOPS
- **Flash Management**
  - Low-Density Parity-Check (LDPC) Code
  - Global Wear Leveling
  - Flash bad-block management
  - Flash Translation Layer: Page Mapping
  - S.M.A.R.T.
  - DataDefender™
  - Device Sleep
  - ATA Secure Erase
  - TRIM
  - SAMRT Read Refresh™
  - SLC-liteX (P/E cycle: 100K)
- **NAND Flash Type:** 3D TLC (BiCS5)
- **MTBF:** >3,000,000 hours
- **Endurance (in drive writes per day: DWPD)**
  - 40 GB: 49.54 DWPD
  - 80 GB: 49.95 DWPD
  - 160 GB: 47.91 DWPD
  - 320 GB: 42.35 DWPD
- **Temperature Range**
  - Operating:
    - Standard: 0°C to 70°C
    - Wide: -40°C to 85°C
  - Storage: -55°C to 100°C
- **Supply Voltage**
  - 3.3 V ± 5%
- **Power Consumption**[1]
  - Active mode (Max.): 410 mA
  - Idle mode: 60 mA
- **SATA Power Management Modes**
- **Connector Type**
  - 75-pin SATA-based M.2 module pinout
- **Form Factor**
  - Double-sided: M.2 2280-D5-B-M
  - Dimensions: 42.00 x 22.00 x 3.88(max.), unit: mm
  - Net weight: 3.86g ± 5%
- **Security**
  - AES 256-bit hardware encryption
- **Reliability**
  - Thermal Sensor
  - End-to-End Data Protection
- **RoHS Compliant**

Note:
1. Varies from capacities. The values for performances and power consumptions presented are typical and may vary depending on flash configurations or platform settings. The term idle refers to the standby state of the device.

© 2023 Apacer Technology Inc.

Table of Contents

1. General Description 4

2. Functional Block 4

3. Pin Assignments.....5

4. Product Specifications.....8

4.1 Capacity.....8
4.2 Performance.....8
4.3 Environmental Specifications.....9
4.4 Mean Time Between Failures (MTBF).....9
4.5 Certification and Compliance.....9
4.6 Endurance.....10
4.7 LED Indicator Behavior.....10

5. Flash Management.....11

5.1 Error Correction/Detection.....11
5.2 Bad Block Management.....11
5.3 Global Wear Leveling.....11
5.4 DataDefender™.....11
5.5 ATA Secure Erase.....11
5.6 Flash Translation Layer – Page Mapping.....12
5.7 TRIM.....12
5.8 Device Sleep (DevSleep or DEVSLP) Mode.....12
5.9 SATA Power Management.....13
5.10 SLC-liteX.....13
5.11 SMART Read Refresh™.....13

6. Security and Reliability Features.....14

6.1 Advanced Encryption Standard.....14
6.2 Thermal Sensor.....14
6.3 End-to-End Data Protection.....14

7. Software Interface.....15

7.1 Command Set.....15
7.2 S.M.A.R.T.....16

8. Electrical Specifications.....17

© 2023 Apacer Technology Inc.

8.1 Operating Voltage 17
8.2 Power Consumption 17

9. Mechanical Specifications 18

10. Product Ordering Information 19

10.1 Product Code Designations 19
10.2 Valid Combinations 20

© 2023 Apacer Technology Inc.

1. General Description

Apacer's SH250-M242, utilizing 3D NAND for higher capacity up to 320GB and providing more power efficiency than 2D NAND, is the next generation Solid State Drive (SSD) with compact and high-speed storage and great performance. Designed in SATA 6 Gb/s interface, SH250-M242 provides full compliance with the latest SATA Revision 3.2 interface specifications and delivers exceptional read/write speed, making it the leading add-in storage solution for future host computing systems.

SH250-M242 is built with a powerful SATA controller that supports on-the-module ECC as well as efficient wear leveling scheme and implemented with LDPC (Low Density Parity Check) ECC engine to extend SSD endurance and increase data reliability. With Apacer's SLC-liteX technology, SH250-M242 performs with higher number of P/E cycles up to 100,000 times. Furthermore, SH250-M242 is equipped with a built-in thermal sensor to monitor the temperature of the SSD via S.M.A.R.T commands to prevent overheating. Operating under 6 Gb/s interface, SH250-M242 is provided with Apacer latest S.M.A.R.T. that is primarily oriented for the latest SATA interface SSD, for drive lifetime monitoring and analysis. For highly-intensive applications, End-to-End Data Protection ensures that data integrity can be assured at multiple points in the path to enable reliable delivery of data transfers.

Security-wise, Advanced Encryption Standard (AES) ensures data security and provides users with peace of mind knowing their data is safeguarded at all times. SH250-M242 also adopts the latest page mapping file translation layer and comes with various implementations including power saving modes, wear leveling, flash block management, S.M.A.R.T., TRIM, DataDefender™ and SMART Read Refresh™.

With exceptional performance, trustable reliability and enhanced data protection, SH250-M242 is definitely the ideal storage or cache solution for a variety of applications ranging from industrial, imaging, computing to enterprise markets.

2. Functional Block

Apacer SH250-M242 includes a single-chip controller and flash media. The controller integrates the flash management unit to support multi-channel, multi-bank flash arrays. Figure 2-1 shows the functional block diagram.

Note: The actual number of NAND flash used on Apacer SH250-M242 varies from capacities. The illustration is for reference only.

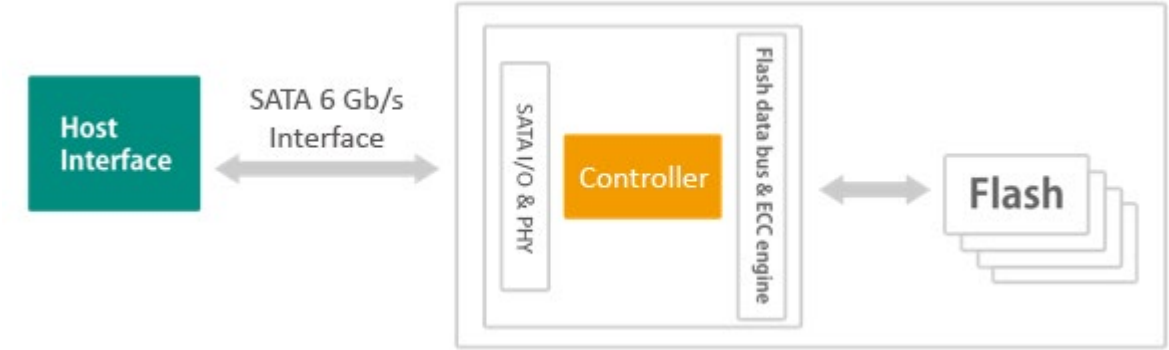

Figure 2-1 Functional Block Diagram

© 2023 Apacer Technology Inc.

3. Pin Assignments

This connector does not support hot plug capability. There are a total of 75 pins. 12 pin locations are used for mechanical key locations; this allows such a module to plug into both Key B and Key M connectors.

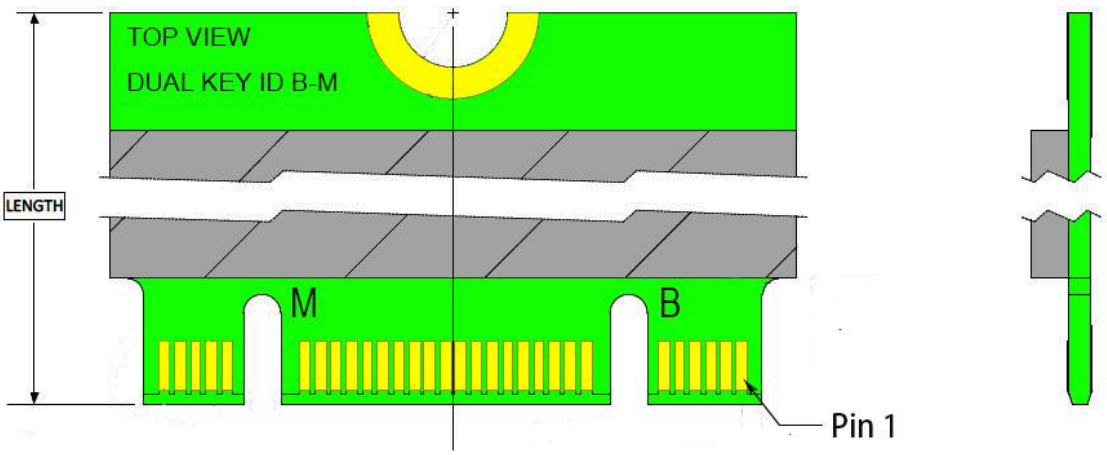

Figure 3-1 SATA Connectors

Table 3-1 Pin Assignments

Pin No.	Type	Description
1	CONFIG_3	Ground (according to M.2 configurations for SSD-SATA definition)
2	3.3V	Supply Pin, 3.3V
3	GND	Ground
4	3.3V	Supply pin, 3.3V
5	No connect	No connect
6	Not available	No connect
7	Not available	No connect
8	Not available	Reserved for Apacer use only[1]
9	No connect	No connect
10	DAS/DSS	Device Activity Signal/Disable Staggered Spin-up
11	No connect	No connect
12	(removed for key)	Mechanical notch B
13	(removed for key)	Mechanical notch B
14	(removed for key)	Mechanical notch B
15	(removed for key)	Mechanical notch B
16	(removed for key)	Mechanical notch B
17	(removed for key)	Mechanical notch B
18	(removed for key)	Mechanical notch B
19	(removed for key)	Mechanical notch B
20	Not available	No connect

© 2023 Apacer Technology Inc.

Table 3-1 Pin Assignments

Pin No.	Type	Description
21	CONFIG_0	Ground (according to M.2 configurations for SSD-SATA definition)
22	Not available	No connect
23	Not available	No connect
24	Not available	No connect
25	Not available	No connect
26	Not available	No connect
27	GND	Ground
28	Not available	No connect
29	PERn1	No connect
30	Not available	No connect
31	PERp1	No connect
32	Not available	No connect
33	GND	Ground
34	Not available	No connect
35	PETn1	No connect
36	Not available	No connect
37	PETp1	No connect
38	DEVSLP	Device Sleep, input. If driven high the host is informing the SSD to enter a low power state
39	GND	Ground
40	Not available	No connect
41	SATA-Rx+	Host receiver differential signal pair
42	Not available	No connect
43	SATA-Rx-	Host receiver differential signal pair
44	Not available	No connect
45	GND	Ground
46	Not available	No connect
47	SATA-Tx-	Host transmitter differential pair
48	Not available	No connect
49	SATA-Tx+	Host transmitter differential pair
50	PERST#	No connect
51	GND	Ground
52	CLKREQ#	No connect
53	REFCLKN	No connect
54	PEWAKE#	No connect
55	REFCLKP	No connect
56	MFG1	Reserved for Apacer use only[1]
57	GND	Ground
58	MFG2	Reserved for Apacer use only[1]
59	(removed for key)	Mechanical notch M
60	(removed for key)	Mechanical notch M

© 2023 Apacer Technology Inc.

Table 3-1 Pin Assignments

Pin No.	Type	Description
61	(removed for key)	Mechanical notch M
62	(removed for key)	Mechanical notch M
63	(removed for key)	Mechanical notch M
64	(removed for key)	Mechanical notch M
65	(removed for key)	Mechanical notch M
66	(removed for key)	Mechanical notch M
67	Not available	No connect
68	SUSCLK	No connect
69	CONFIG_1	Ground
70	3.3V	Supply pin, 3.3V
71	GND	Ground
72	3.3V	Supply pin, 3.3V
73	GND	Ground
74	3.3V	Supply pin, 3.3V
75	CONFIG_2	Ground

Note:
1. Reserved by Apacer, please do not connect to a host.

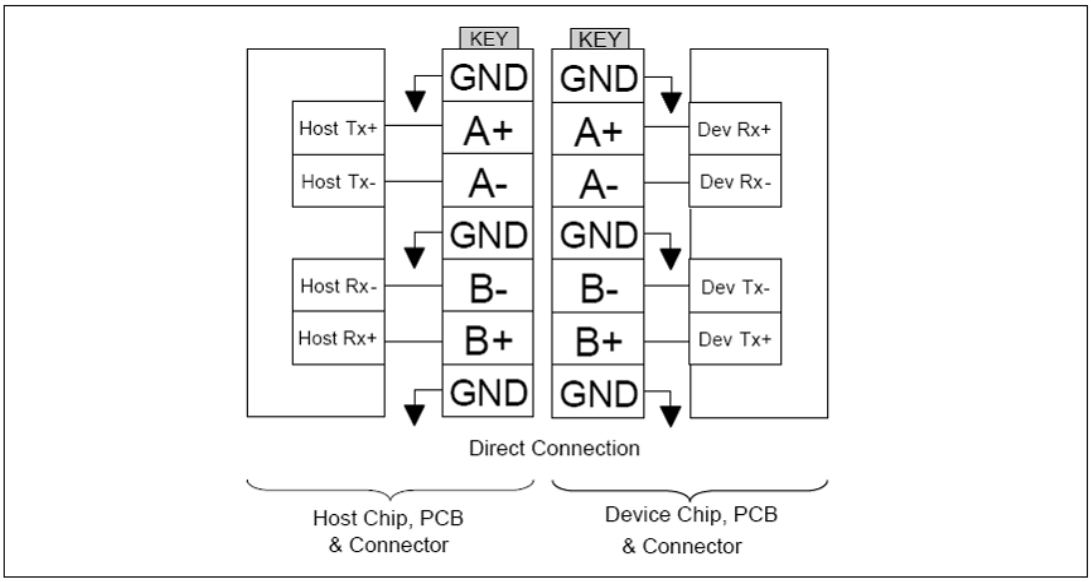

Figure 3-2 Direct Connection between the Host and Device

© 2023 Apacer Technology Inc.

4. Product Specifications

4.1 Capacity

Capacity specifications of SH250-M242 are available as shown in Table 4-1. It lists the specific capacity and the default numbers of heads, sectors and cylinders for each product line.

Table 4-1 Capacity Specifications

Capacity	Total bytes	Cylinders	Heads	Sectors	Total LBA
40 GB	40,018,599,936	16,383	16	63	78,161,328
80 GB	80,026,361,856	16,383	16	63	156,301,488
160 GB	160,041,885,696	16,383	16	63	312,581,808
320 GB	320,072,933,376	16,383	16	63	625,142,448

Notes:
- Display of total bytes varies from operating systems.
- 1 GB = 1,000,000,000 bytes; 1 sector = 512 bytes.
- LBA count addressed in the table above indicates total user storage capacity and will remain the same throughout the lifespan of the device. However, the total usable capacity of the SSD is most likely to be less than the total physical capacity because a small portion of the capacity is reserved for device maintenance usages.

4.2 Performance

Performance of SH250-M242 is listed below in Table 4-2.

Table 4-2 Performance Specifications

Capacity / Performance	40 GB	80 GB	160 GB	320 GB
Sequential Read (MB/s)	550	550	550	550
Sequential Write (MB/s)	460	485	485	485
4K Random Read (IOPS)	16,000	35,000	55,000	51,000
4K Random Write (IOPS)	50,000	63,000	63,000	61,000

Notes:
- Results may differ from various flash configurations or host system setting.
- Sequential read/write is based on CrystalDiskMark 8.0.4 with file size 1,000MB.
- Random read/write is measured using IOMeter with Queue Depth 32.

© 2023 Apacer Technology Inc.

4.3 Environmental Specifications

Environmental specifications of SH250-M242 product are shown in Table 4-3.

Table 4-3 Environmental Specifications

Parameter	Type	Specifications
Temperature	Operating	0°C to 70°C (Standard); -40°C to 85°C (Wide)
	Non-operating	-55°C to 100°C
Vibration	Operating	7.69 GRMS, 20~2000 Hz/random (compliant with MIL-STD-810G)
	Non-operating	4.02 GRMS, 15~2000 Hz/random (compliant with MIL-STD-810G)
Shock	Operating	Acceleration, 50(G)/11(ms)/half sine (compliant with MIL-STD-202G)
	Non-operating	Acceleration, 1500(G)/0.5(ms)/half sine (compliant with MIL-STD-883K)

Note: This Environmental Specification table indicates the conditions for testing the device. Real world usages may affect the results.

4.4 Mean Time Between Failures (MTBF)

Mean Time Between Failures (MTBF) is predicted based on reliability data for the individual components in SH250-M242. The prediction result for SH250-M242 is more than 3,000,000 hours.

Note: The MTBF is predicated and calculated based on “Telcordia Technologies Special Report, SR-332, Issue 3” method.

4.5 Certification and Compliance

SH250-M242 complies with the following standards:

- CE
- UKCA
- FCC
- RoHS Recast
- MIL-STD-810G

© 2023 Apacer Technology Inc.

4.6 Endurance

The endurance of a storage device is predicted by Drive Writes Per Day based on several factors related to usage, such as the amount of data written into the drive, block management conditions, and daily workload for the drive. Thus, key factors, such as Write Amplifications and the number of P/E cycles, can influence the lifespan of the drive.

Table 4-4 Endurance Specifications

Capacity	Drive Writes Per Day
40 GB	49.54
80 GB	49.95
160 GB	47.91
320 GB	42.35

Notes:
- This estimation complies with JEDEC JESD-219, enterprise endurance workload of random data with payload size distribution.
- Flash vendor guaranteed 3D SLC-liteX P/E cycle: 100K
- WAF may vary from capacity, flash configurations and writing behavior on each platform.
- 1 Terabyte = 1,024 GB
- DWPD (Drive Write Per Day) is calculated based on the number of times that user overwrites the entire capacity of an SSD per day of its lifetime during the warranty period. (3D SLC-liteX warranty: 5 years)

4.7 LED Indicator Behavior

The behavior of the SH250-M242 LED indicators is described in Table 4-5.

Table 4-5 LED Behavior

Location	LED	Description
LED A	HDDA1	LED blinks when the drive is being accessed

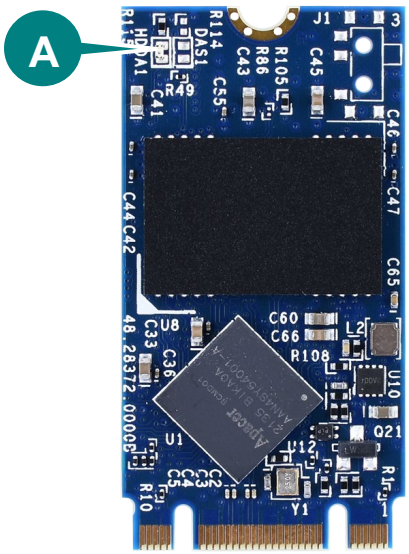

© 2023 Apacer Technology Inc.

5. Flash Management

5.1 Error Correction/Detection

SH250-M242 implements a hardware ECC scheme, based on the Low Density Parity Check (LDPC). LDPC is a class of linear block error correcting code which has apparent coding gain over BCH code because LDPC code includes both hard decoding and soft decoding algorithms. With the error rate decreasing, LDPC can extend SSD endurance and increase data reliability while reading raw data inside a flash chip.

5.2 Bad Block Management

Current production technology is unable to guarantee total reliability of NAND flash memory array. When a flash memory device leaves factory, it comes with a minimal number of initial bad blocks during production or out-of-factory as there is no currently known technology that produce flash chips free of bad blocks. In addition, bad blocks may develop during program/erase cycles. Since bad blocks are inevitable, the solution is to keep them in control. Apacer flash devices are programmed with ECC, page mapping technique and S.M.A.R.T to reduce invalidity or error. Once bad blocks are detected, data in those blocks will be transferred to free blocks and error will be corrected by designated algorithms.

5.3 Global Wear Leveling

Flash memory devices differ from Hard Disk Drives (HDDs) in terms of how blocks are utilized. For HDDs, when a change is made to stored data, like erase or update, the controller mechanism on HDDs will perform overwrites on blocks. Unlike HDDs, flash blocks cannot be overwritten and each P/E cycle wears down the lifespan of blocks gradually. Repeatedly program/erase cycles performed on the same memory cells will eventually cause some blocks to age faster than others. This would bring flash storages to their end of service term sooner. Global wear leveling is an important mechanism that levels out the wearing of all blocks so that the wearing-down of all blocks can be almost evenly distributed. This will increase the lifespan of SSDs.

5.4 DataDefender™

Apacer's DataDefender is an advanced technology of power failure management which combines both firmware and hardware mechanisms to ensure data integrity. When power disruption occurs, the low voltage detector will be triggered. When this happens, the SSD's protection mechanism is activated and cuts off data transmission from the host. Once the power supply is resumed, the firmware protection mechanism will ensure the integrity of the firmware as well as the data already written into the NAND flash media.

5.5 ATA Secure Erase

ATA Secure Erase is an ATA disk purging command currently embedded in most of the storage drives. Defined in ATA specifications, (ATA) Secure Erase is part of Security Feature Set that allows storage drives to erase all user data areas. The erase process usually runs on the firmware level as most of the ATA-based storage media currently in the market are built-in with this command. ATA Secure Erase can securely wipe out the user data in the drive and protects it from malicious attack.

© 2023 Apacer Technology Inc.

5.6 Flash Translation Layer – Page Mapping

Page mapping is an advanced flash management technology whose essence lies in the ability to gather data, distribute the data into flash pages automatically, and then schedule the data to be evenly written. Page-level mapping uses one page as the unit of mapping. The most important characteristic is that each logical page can be mapped to any physical page on the flash memory device. This mapping algorithm allows different sizes of data to be written to a block as if the data is written to a data pool and it does not need to take extra operations to process a write command. Thus, page mapping is adopted to increase random access speed and improve SSD lifespan, reduce block erase frequency, and achieve optimized performance and lifespan.

5.7 TRIM

TRIM is a SATA command that helps improve the read/write performance and efficiency of solid-state drives (SSD). The command enables the host operating system to inform SSD controller which blocks contain invalid data, mostly because of the erase commands from host. The invalid will be discarded permanently and the SSD will retain more space for itself.

5.8 Device Sleep (DevSleep or DEVSLP) Mode

Device Sleep is a feature that allows SATA devices to enter a low power mode by designating a particular pin as DEVSLP signal with an aim to reducing power consumption.

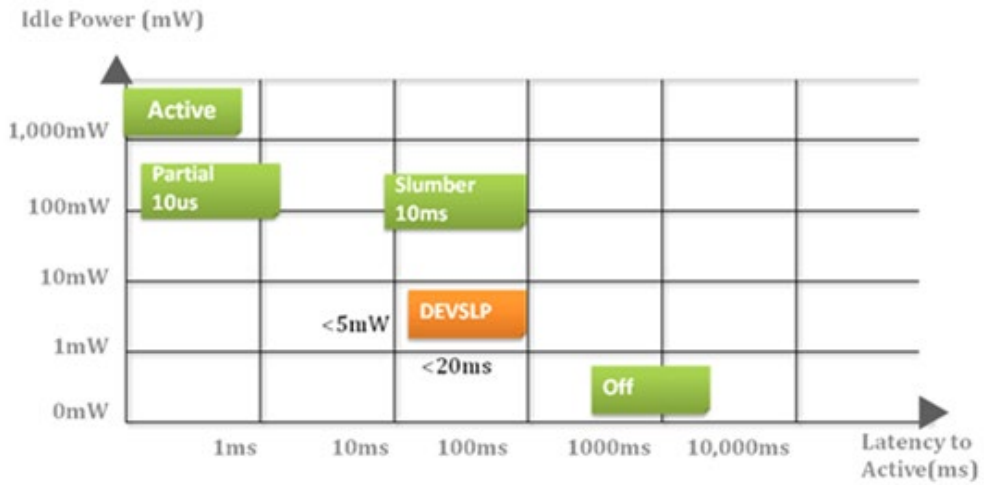

Figure 5-1 Device Sleep

© 2023 Apacer Technology Inc.

5.9 SATA Power Management

By complying with SATA 6 Gb/s specifications, the SSD supports the following SATA power saving modes:

- ACTIVE: PHY ready, full power, TX & RX operational
- PARTIAL: Reduces power, resumes in under 10 μs (microseconds)
- SLUMBER: Reduces power, resumes in under 10 ms (milliseconds)
- HIPM: Host-Initiated Power Management
- DIPM: Device-Initiated Power Management
- AUTO-SLUMBER: Automatic transition from partial to slumber.
- Device Sleep (DevSleep or DEVSLP): PHY powered down; power consumption ≦ 5 mW; host assertion time ≦ 10 ms; exit timeout from this state ≦ 20 ms (unless specified otherwise in SATA Identify Device Log).

Note: The behaviors of power management features would depend on host/device settings.

5.10 SLC-liteX

Apacer's 3D NAND SLC-liteX technology breaks through the limitations of existing technology and provides up to 100,000 P/E cycles, which is over 33 times more than MLC or industrial 3D TLC. Powered by carefully selected NAND components, the firmware structure is specifically optimized to enhance NAND flash stability during daily operations, and the error handling algorithm is significantly improved to avoid any unexpected ECC errors. The longest lifespans are therefore available at reasonable cost.

5.11 SMART Read Refresh™

Apacer's SMART Read Refresh plays a proactive role in avoiding read disturb errors from occurring to ensure health status of all blocks of NAND flash. Developed for read-intensive applications in particular, SMART Read Refresh is employed to make sure that during read operations, when the read operation threshold is reached, the data is refreshed by re-writing it to a different block for subsequent use.

© 2023 Apacer Technology Inc.

6. Security and Reliability Features

6.1 Advanced Encryption Standard

Advanced Encryption Standard (AES) is a specification for the encryption of electronic data. AES has been adopted by the U.S. government since 2001 to protect classified information and is now widely implemented in embedded computing applications. The AES algorithm used in software and hardware is symmetric so that encrypting/decrypting requires the same encryption key. Without the key, the encrypted data is inaccessible to ensure information security.

Notably in flash memory applications, AES 256-bit hardware encryption is the mainstream to protect sensitive or confidential data. The hardware encryption provides better performance, reliability, and security than software encryption. It uses a dedicated processor, which is built inside the controller, to process the encryption and decryption. This enormously shortens the processing time and makes it efficient.

6.2 Thermal Sensor

Apacer Thermal Sensor is a digital temperature sensor with serial interface. By using a designated pin for transmission, storage device owners are able to read temperature data.

6.3 End-to-End Data Protection

End-to-End Data Protection is a feature implemented in Apacer SSD products that extends error control to cover the entire path from the host computer to the drive and back, and ensure data integrity at multiple points in the path to enable reliable delivery of data transfers. Unlike ECC which does not exhibit the ability to determine the occurrence of errors throughout the process of data transmission, End-to-End Data Protection allows SSD controller to identify an error created anywhere in the path and report the error to the host computer before it is written to the drive. This error-checking and error-reporting mechanism therefore guarantees the trustworthiness and reliability of the SSD.

© 2023 Apacer Technology Inc.

7. Software Interface

7.1 Command Set

Table 7-1 summarizes the ATA commands supported by SH250-M242.

Table 7-1 Command Set

Code	Command	Code	Command
E5h	CHECK POWER MODE	F4h	SECURITY ERASE UNIT
06h	DATA SET MANAGEMENT	F5h	SECURITY FREEZE LOCK
92h	DOWNLOAD MICROCODE	F1h	SECURITY SET PASSWORD
90h	EXECUTE DEVICE DIAGNOSTIC	F2h	SECURITY UNLOCK
E7h	FLUSH CACHE	70h	SEEK
EAh	FLUSH CACHE EXT	EFh	SET FEATURES
ECh	IDENTIFY DEVICE	C6h	SET MULTIPLE MODE
E3h	IDLE	E6h	SLEEP
E1h	IDLE IMMEDIATE	B0h	SMART
91h	INITIALIZE DEVICE PARAMETERS	E2h	STANDBY
E4h	READ BUFFER	E0h	STANDBY IMMEDIATE
C8h	READ DMA	E8h	WRITE BUFFER
25h	READ DMA EXT	CAh	WRITE DMA
60h	READ FPDMA QUEUED	35h	WRITE DMA EXT
C4h	READ MULTIPLE	3Dh	WRITE DMA FUA EXT
29h	READ MULTIPLE EXT	61h	WRITE FPDMA QUEUED
2Fh	READ LOG EXT	3Fh	WRITE LOG EXT
47h	READ LOG DMA EXT	57h	WRITE LOG DMA EXT
20h	READ SECTOR	C5h	WRITE MULTIPLE
24h	READ SECTOR EXT	39h	WRITE MULTIPLE EXT
40h	READ VERIFY SECTORS	CEh	WRITE MULTIPLE FUA EXT
42h	READ VERIFY SECTORS EXT	30h	WRITE SECTOR
10h	RECALIBRATE	34h	WRITE SECTOR EXT
F6h	SECURITY DISABLE PASSWORD	45h	WRITE UNCORRECTABLE EXT
F3h	SECURITY ERASE PREPARE		

© 2023 Apacer Technology Inc.

7.2 S.M.A.R.T.

SMART, an acronym for Self-Monitoring, Analysis and Reporting Technology, is an open standard that allows a hard disk drive to automatically detect its health and report potential failures. When a failure is recorded by SMART, users can choose to replace the drive to prevent unexpected outage or data loss. Moreover, SMART can inform users of impending failures while there is still time to perform proactive actions, such as copy data to another device.

Table 7-2 SMART Subcommand Set

Code	SMART Subcommand
D0h	READ DATA
D1h	READ ATTRIBUTE THRESHOLDS
D2h	ENABLE/DISABLE ATTRIBUTE AUTOSAVE
D4h	EXECUTE OFF-LINE IMMEDIATE
D5h	SMART READ LOG
D6h	SMART WRITE LOG
D8h	ENABLE OPERATIONS
D9h	DISABLE OPERATIONS
DAh	RETURN STATUS

Table 7-3 General SMART Attribute Structure

Byte	Description
0	ID (Hex)
1 – 2	Status Flag
3	Value
4	Worst
5*-11	Raw Data

*Byte 5: LSB

Table 7-4 SMART Attribute ID List

ID (Hex)	Attribute Name
9 (0x09)	Power-on Hours
12 (0x0C)	Power Cycle Count
163 (0xA3)	Max. Erase Count
164 (0xA4)	Avg. Erase Count
166 (0xA6)	Total Later Bad Block Count
167 (0xA7)	SSD Protect Mode (Vendor Specific)
168 (0xA8)	SATA PHY Error Count
171 (0xAB)	Program Fail Count
172 (0xAC)	Erase Fail Count
175 (0xAF)	Bad Cluster Table Count
192 (0xC0)	Unexpected Power Loss Count
194 (0xC2)	Temperature
231 (0xE7)	Lifetime Left
241 (0xF1)	Total Sectors of Write

© 2023 Apacer Technology Inc.

8. Electrical Specifications

8.1 Operating Voltage

Table 8-1 lists the supply voltage for SH250-M242.

Table 8-1 Operating Range

Item	Range
Supply Voltage	3.3V ± 5%

8.2 Power Consumption

Table 8-2 lists the power consumption for SH250-M242.

Table 8-2 Power Consumption (Unit: mA)

Capacity / Mode	40 GB	80 GB	160 GB	320 GB
Active (Max.)	360	400	410	410
Idle	60	60	60	60

Notes:
- All values are typical and may vary depending on flash configurations or host system settings.
- Power consumption is measured using CrystalDiskMark 8.0.4.

© 2023 Apacer Technology Inc.

9. Mechanical Specifications

Table 9-1 Physical Information

Parameter	Unit	40 GB	80 GB	160 GB	320 GB
Length	mm	42.00 ± 0.15			
Width		22.00 ± 0.15			
Height (Max.)		3.88			
Weight	g ±5%	3.45	3.86	3.54	3.65

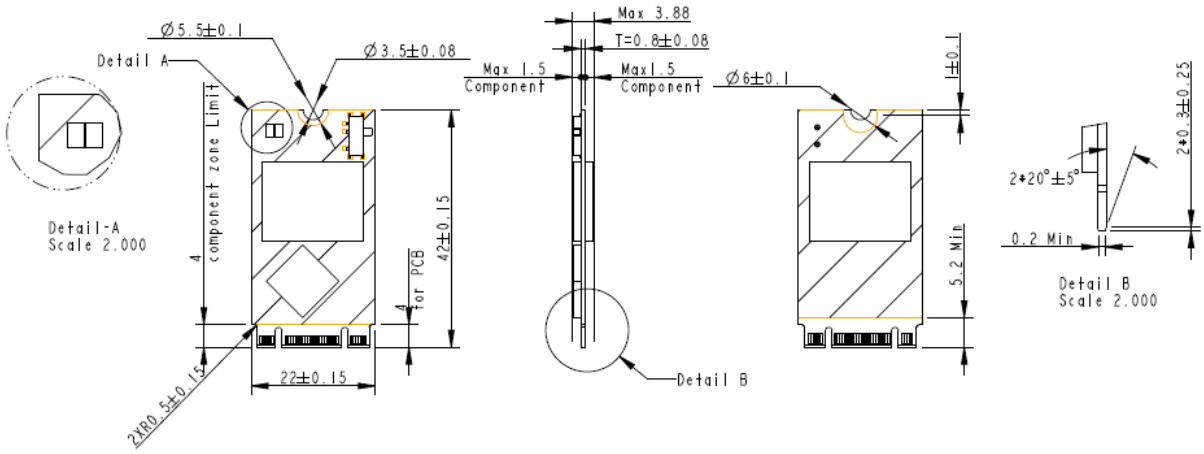

Figure 9-1 Physical Dimensions

© 2023 Apacer Technology Inc.

10. Product Ordering Information

10.1 Product Code Designations

Apacer's SH250-M242 SSD is available in different configurations and densities. See the chart below for a comprehensive list of options for the SH250- M242 series devices.

Code	1	2	3	4	5	6	7	8	9	10	11	12	13	14	15	16
	A	3	2	.	2	5	9	X	X	B	.	X	X	X	F	8

Code 1-3 (Product Line & Form Factor)	SATA M.2 2242
Code 5-6 (Model/Solution)	SH250
Code 7-8 (Product Capacity)	9H: 40GB 9J: 80GB 9K: 160GB 9L: 320GB
Code 9 (Flash Type & Product Temp)	Y: 3D SLC-lite standard temperature Z: 3D SLC-lite wide temperature
Code 10 (Product Spec)	Double-sided B+M key
Code 12-14 (Version Number)	Random numbers generated by system
Code 15-16 (Firmware Version)	SLC-liteX Thermal Sensor DEVSLP

© 2023 Apacer Technology Inc.

10.2 Valid Combinations

The following table lists the available models of the SH250-M242 series which are in mass production or will be in mass production. Consult your Apacer sales representative to confirm availability of valid combinations and to determine availability of new combinations.

Capacity	Standard Temperature	Wide Temperature
40GB	A32.259HYB.002F8	A32.259HZB.002F8
80GB	A32.259JYB.002F8	A32.259JZB.002F8
160GB	A32.259KYB.002F8	A32.259KZB.002F8
320GB	A32.259LYB.001F8	A32.259LZB.001F8

© 2023 Apacer Technology Inc.

Revision History

Revision	Description	Date
1.0	Initial release	2/2/2023

© 2023 Apacer Technology Inc.