NOTES:

1. MATERIALS AND FINISHES:
   BODY - BRASS, WHITE BRONZE PLATING
   CONTACT - BeCu, SILVER PLATING
   INSULATOR - PTFE, NATURAL

2. ELECTRICAL:
   A. IMPEDANCE: 50 OHM
   B. FREQUENCY RANGE: DC - 6 GHz
   C. VSWR(RETURN LOSS): 30 dB @ DC - 2 GHz
      25 dB @ 2 - 6 GHz
   D. INTERMODULATION 3RD ORDER: -166 dBc MAX. (2*43 dBm)
   E. DIELECTRIC WITHSTANDING VOLTAGE: 2500 VRMS, MIN.
   F. INSULATION RESISTANCE: 5000 MΩ MIN.

3. MECHANICAL:
   A. DURABILITY: 500 CYCLES MIN.
   B. TEMPERATURE RANGE: -55° C TO +100° C

4. PACKAGING:
   A. QUANTITY: SINGLE PACK
   B. MARKING: PACKAGING TO BE MARKED
      "AMPHENOL RF, AD-716J225P-1, AND DATE CODE"

PRELIMINARY ISSUE

THIRD ANGLE PROJ.

REVISIONS				
REV	DESCRIPTION	DATE	ECN	APPR
A	RELEASE TO MFG.	17-Oct-18	--	SV

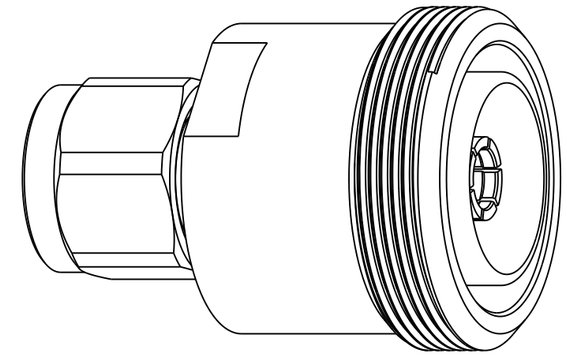

SCALE 2.000

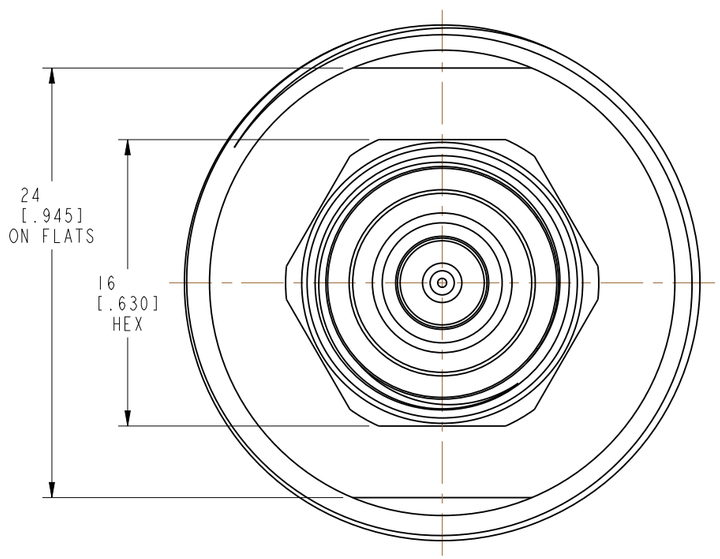

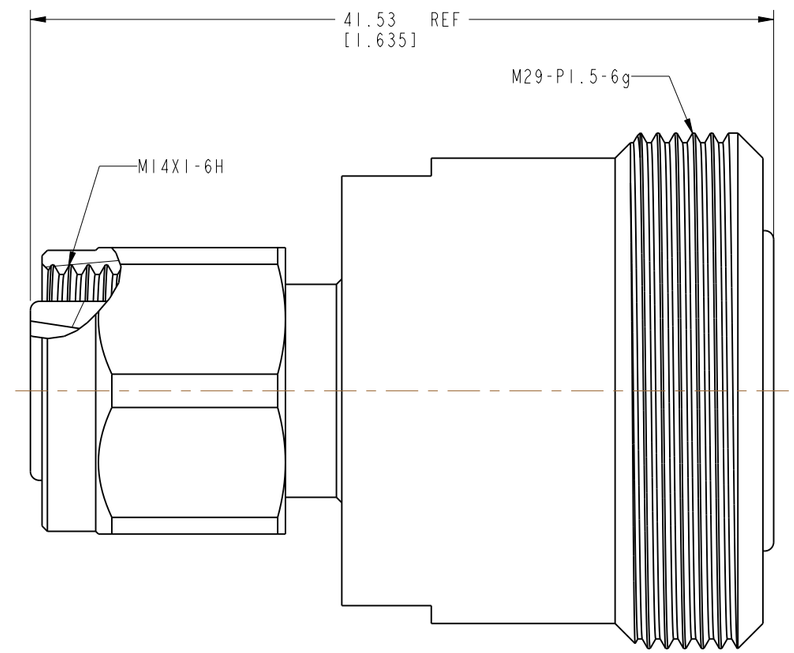

CUSTOMER OUTLINE DRAWING

ALL OTHER SHEETS ARE FOR INTERNAL USE ONLY

UNLESS OTHERWISE SPECIFIED, DIMENSIONS ARE IN METRIC AND TOLERANCES ARE:

<0.5mm	0.5 - 6mm	6 - 30mm	30 - 120mm	ANGLES
± 0.05mm	±0.1mm	±0.2mm	± 0.3mm	±1°

NOTICE - These drawings, specifications, or other data (1) are, and remain the property of Amphenol corp. (2) must be returned upon request; and (3) are confidential and not to be disclosed to any person other than those to whom they are given by Amphenol Corp. the furnishing of these drawings, specifications, or other data by Amphenol Corp., or to any other person to anyone for any purpose is not to be regarded by implication or otherwise in any manner licensing, granting rights to permitting such holder or any other person to manufacture, use or sell any product, process or design, patented or otherwise, that may in any way be related to or disclosed by said drawings, specifications, or other data.

MATERIAL SEE NOTES	DRAWN S.VO	DATE 14-May-18	TITLE 2.2-5 PLUG TO 7/16 JACK ADAPTER
REFERENCE EAR# 8104 REF: ---	ENGINEER S.VO	DATE 14-May-18	
	APPROVED ---	DATE ---	SCALE: 3.0:1.0 SHEET 2 OF 2
CONFIGURATION LEVEL: In Work	CAD FILE		DWG SIZE B / REV A
FINISH			

Amphenol RF

www.amphenolrf.com

DRAWING NO. AD-716J225P-1

ITEM NO. AD-716J225P-1

PART NO. AD-716J225P-1