Art.-Number: 701977

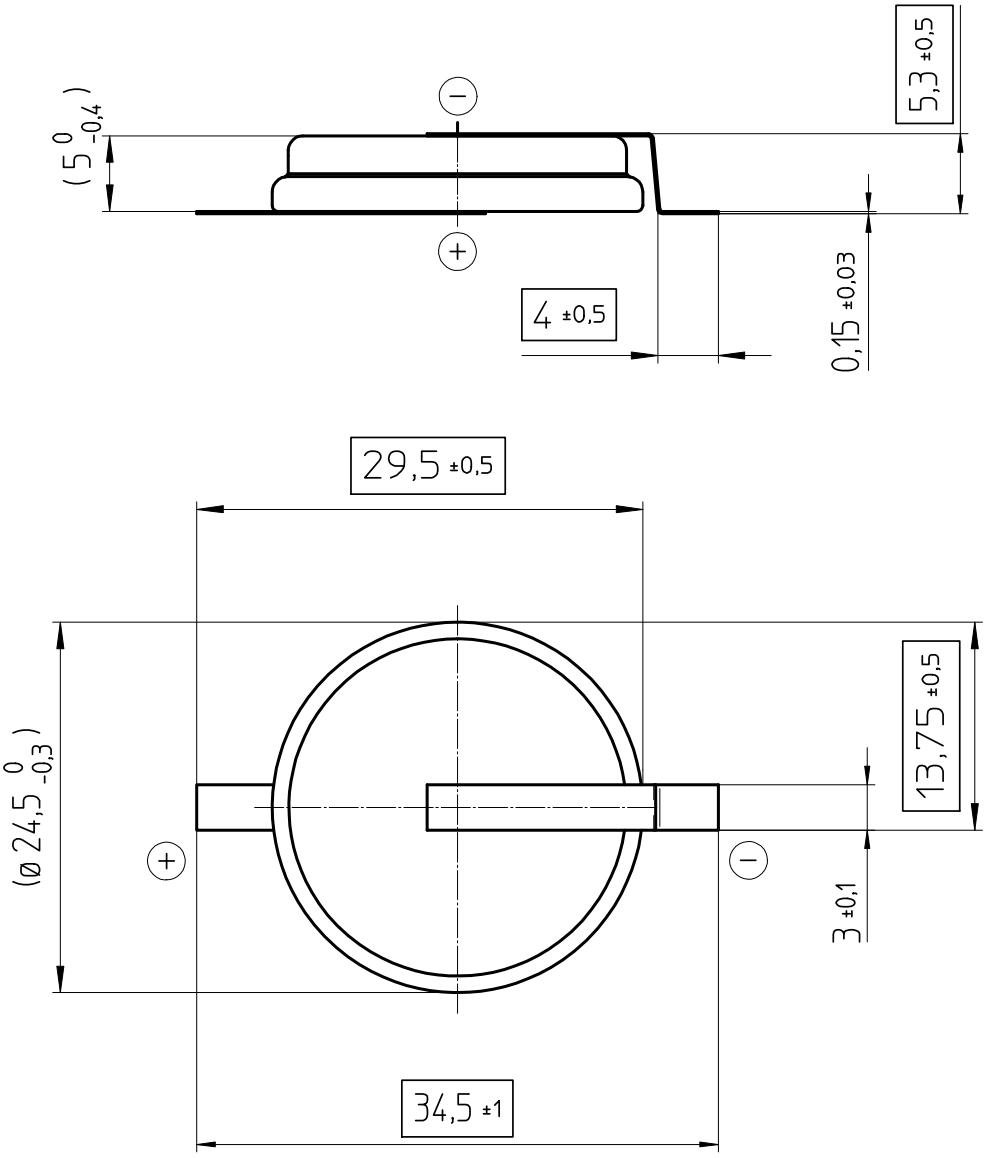

- Samples can deviate in the execution from the serie.

- Dimensions and tolerances can be specified only after the testing of the devices for the mass production definitely

Tab material: Isotan (54%Cu,44%Ni,Mn)

All framed values will be used for dimension checking !

The Products of Renata SA are neither designed nor authorized for use in certain areas of appliction of environment.
For further details we refer to our webpage: www.renata.com/downloads/restriction_of_use

Rev.	1	21.05.15	PWu	Rev.	⊙	.	.		Customer's Approval		
Rev.	2	16.09.19	SRi	Rev.	⊙	.	.		Date		
Rev.	⊙	.	.	Rev.	⊙	.	.		Signature		
Titel: CR2450NSM								Scale 2:1	Drawn	05.11.07	SRi
									Checked	13.09.19	HSn
									Approved	16.09.19	MDi

renata batteries

CH-4452 Itingen
Switzerland

3.9206.4-2