SERPAC Electronic Enclosures CX67D-YY-A-ZZ

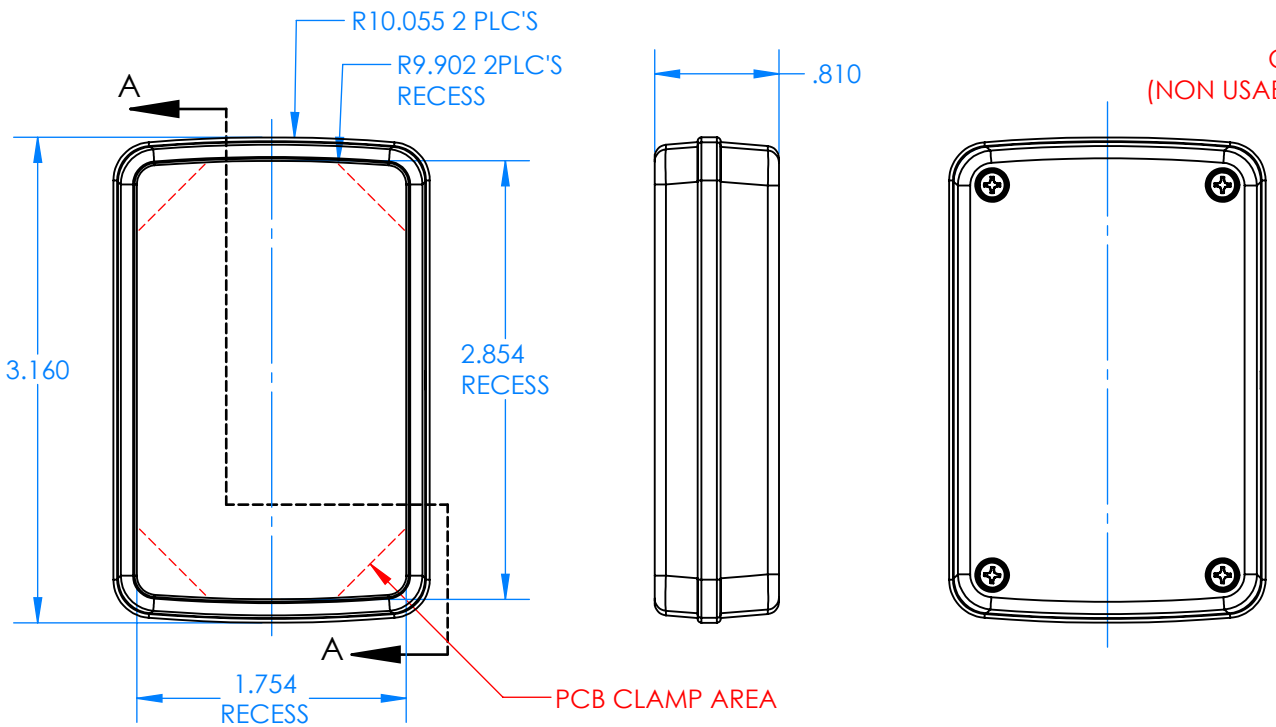

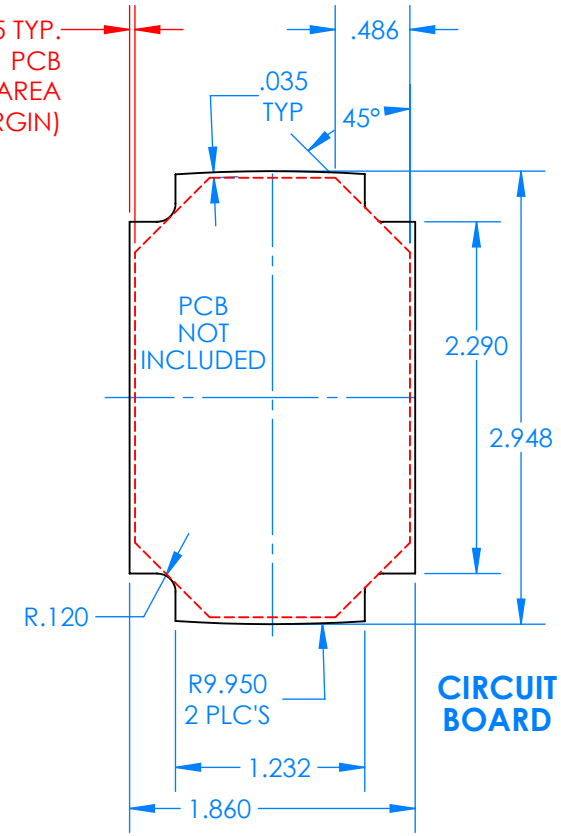

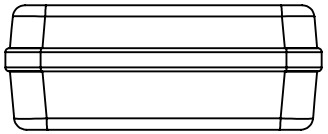

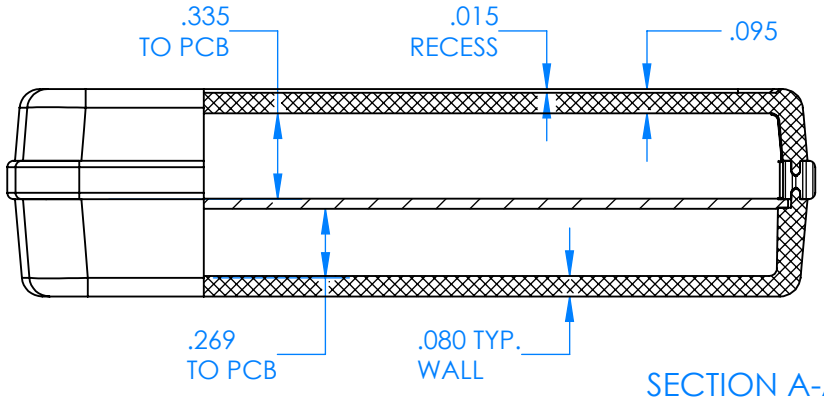

SECTION A-A

PN	Description
5533D	(1) BW 6B Top style D
5536D	(1) BW 6C Bottom style D
5540A	(1) CX6A Series perimeter seal style A
6002	(4) #2 X 3/8" PH HD screw TORQUE 35-60 in-oz.

Wateright enclosure mees or exceeds:
IP67
NEMA 4X, 12, 13

Enclosure color (YY)

Top-Bottom combinations available

BK=black
CL=clear
TRGY=translucent gray
TRRD=translucent red

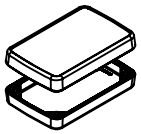

Seal color (ZZ)

BK=black
BL=blue
GM=gunmetal
NG=neon green
NO=neon orange
OR=orange
YL=yellow
WH=white

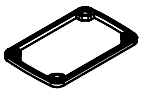

9/4/2020

2009 Wright Ave. La Verne, CA 91750
Ph. (626) 331-0517 Fx. (626) 331-8584 serpac.com