RELEASED FOR PRODUCTION

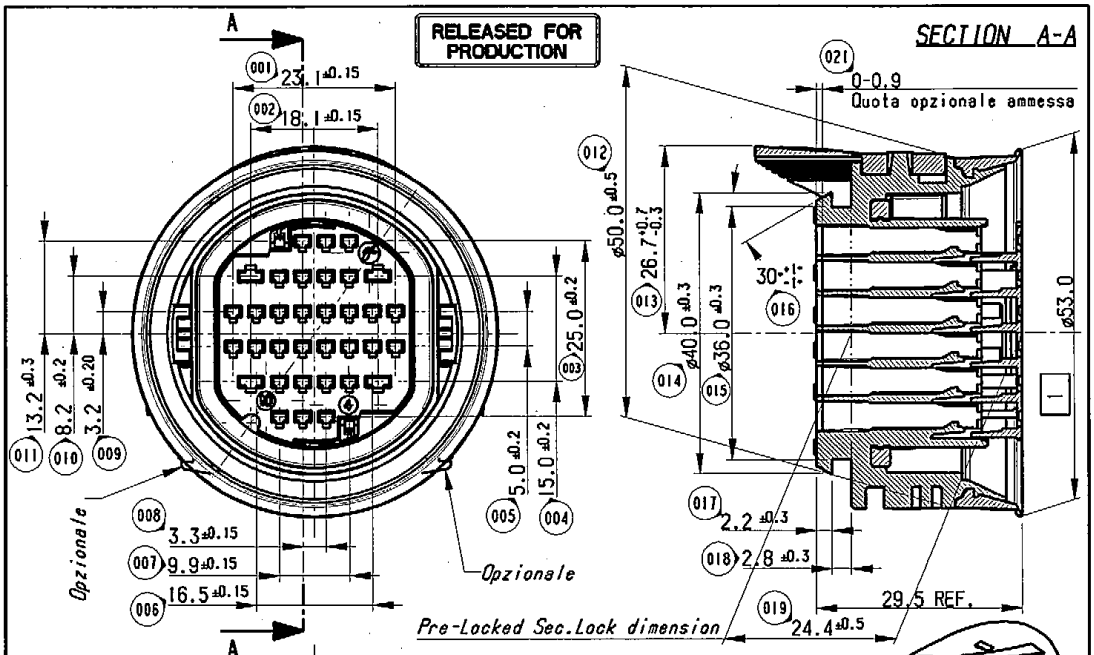

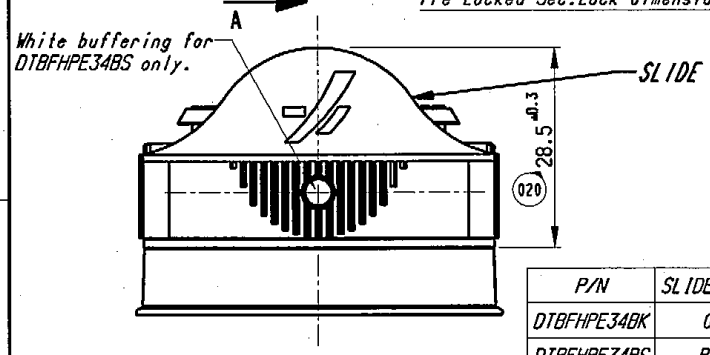

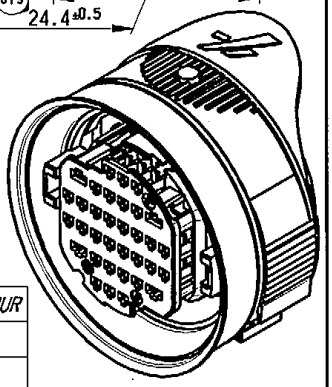

P/N	SLIDE COLOUR
DTBFHPE34BK	GREY
DTBFHPE34BS	BLACK

NOTE 1:

- The connector is designed for the female contacts : Sicma 2/3 1.5 x 0.8 mm.
  Sicma 2 2.8 x 0.8 mm.

[1] External gasket maximum clearance after mating male and female holder.

- Completed by the contacts it can be mated with the relative male holder 34 ways : DTBMHPE34BKXXXX
  DTBMHPE34DCXXXX

- For use and mating operation : see spec. IPS 160

View " X "
Scale 1:1

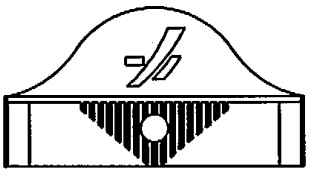

NOTE 2:

- The connector can be supplied with different slides.
  (View " X " shows the alternative configuration)

SHEET 1 OF 2

FSA 309026

Description : DOOR TO BODY 34 WAYS ASSY FEMALE HOLDER		Cat. No : SEE TABLE	
Draft		European projection	FCI FRAMATOME CONNECTORS INTERNATIONAL
Date 10/11/03	This is our exclusive property. It is not to be copied, reprinted or disclosed to a third party, nor used for manufacturing, without our written consent, and has to be returned to us in case of no usage.	Not to scale All dimensions in mm Tolerances ± ___ mm Unless otherwise specified	Framatome connectors Italia S.p.A.
We reserve the right to change dimensions or requirements without prior notice.			FSA 309026 customer drawing — Rev. 09