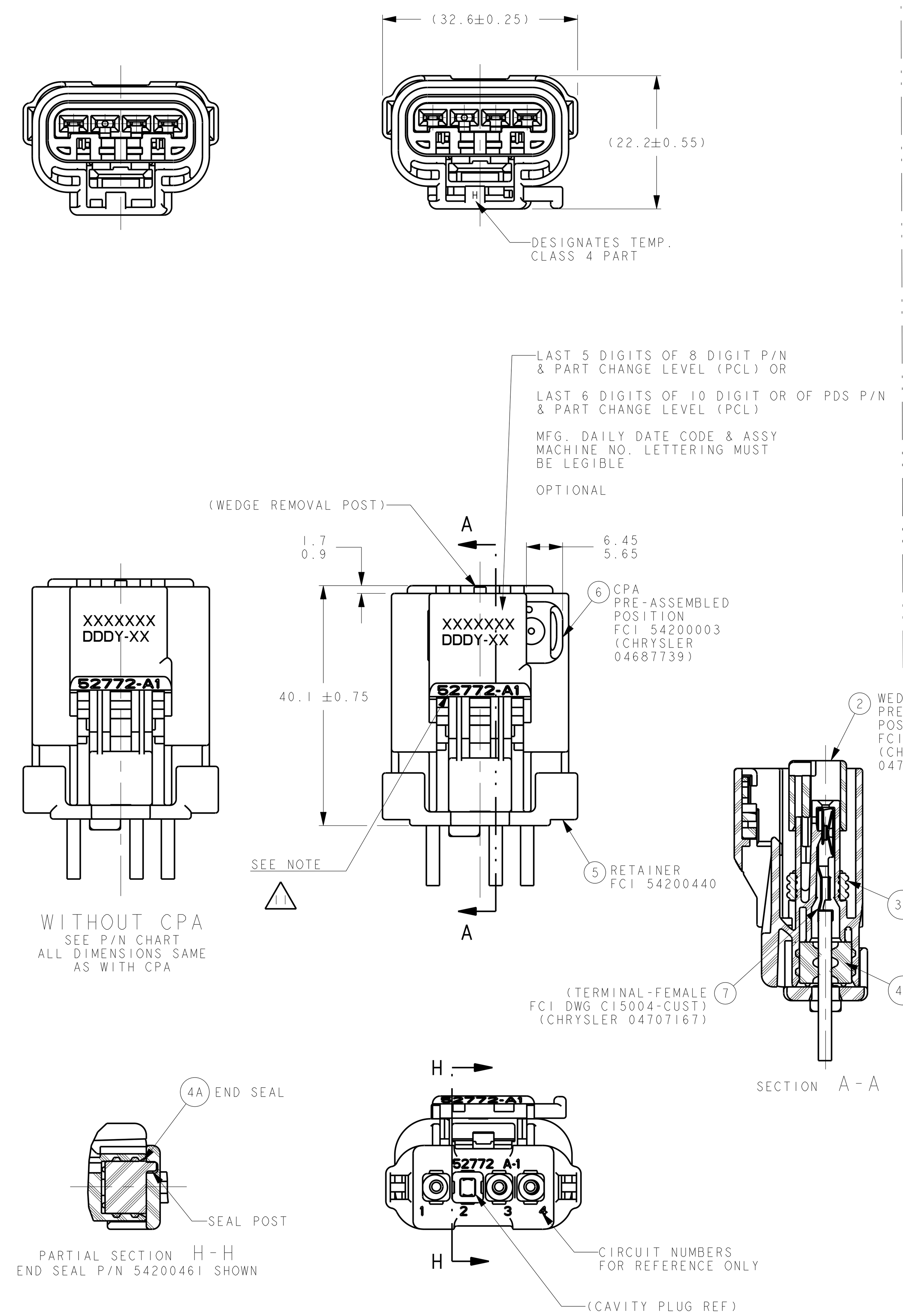

SEALED ASSEMBLY VIEWS
SEE P/N CHART
SHOWN WITH CPA'S

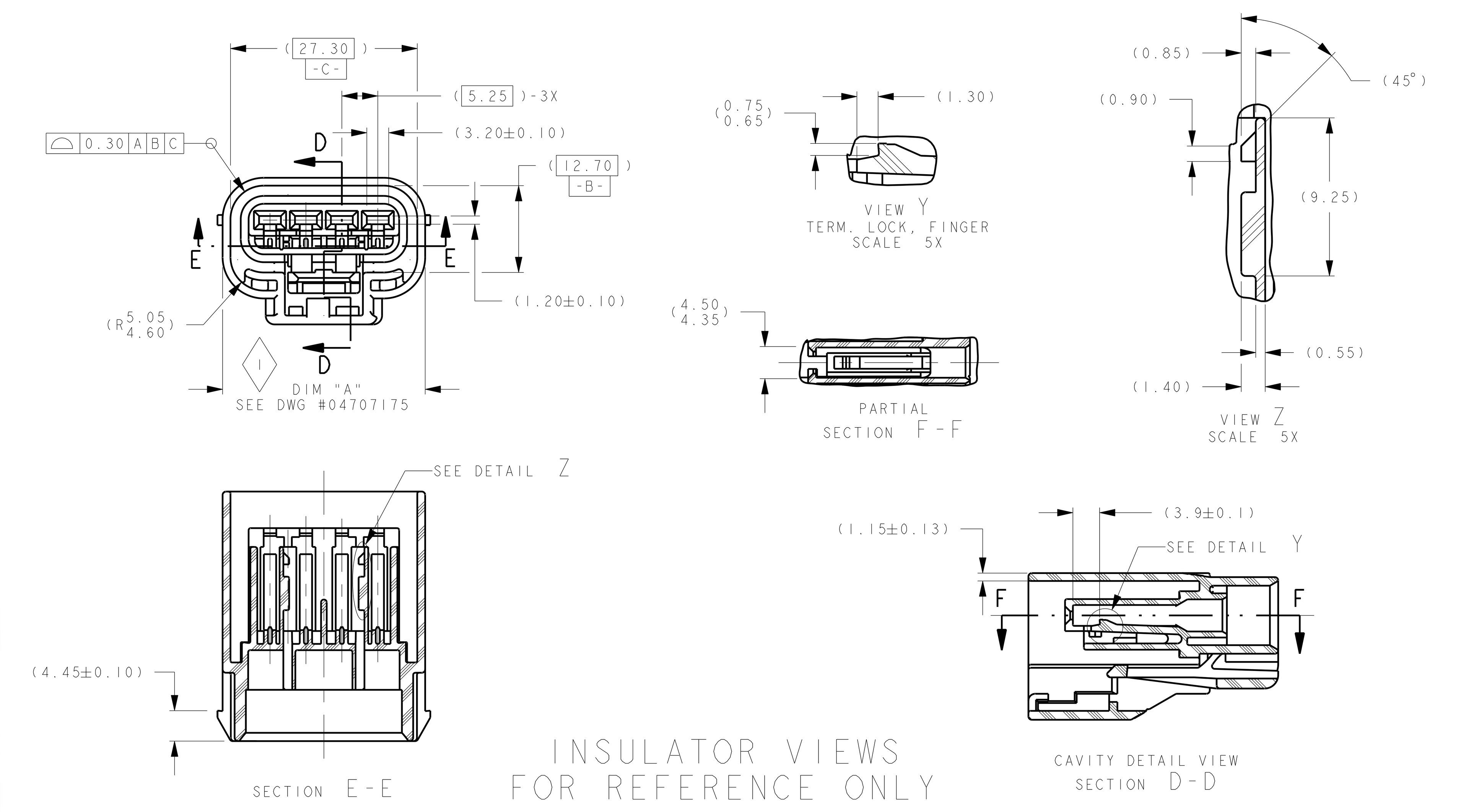

INSULATOR VIEWS
FOR REFERENCE ONLY

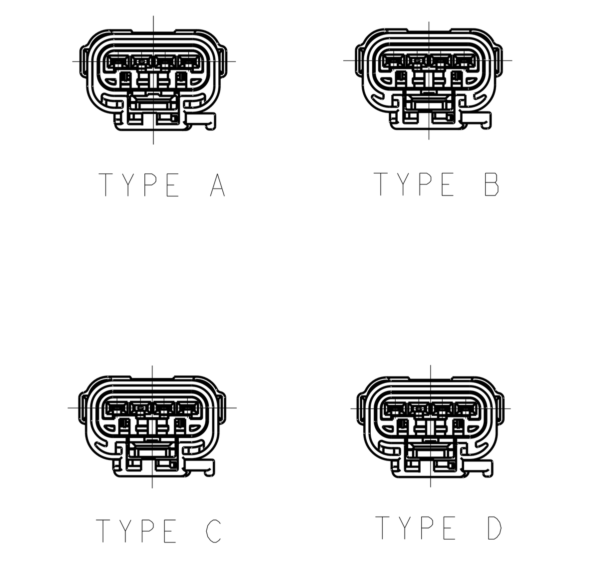

POLARIZATION OPTIONS
FULL SIZE
SHOWN W/CPA

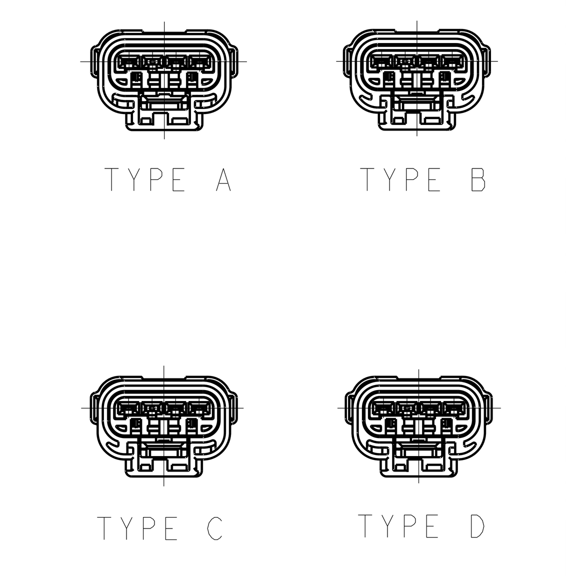

POLARIZATION OPTIONS
FULL SIZE
SHOWN W/O CPA

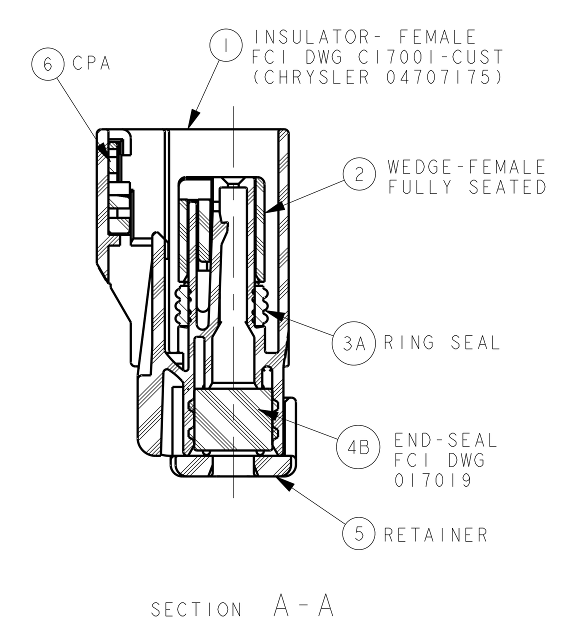

SECTION A-A
(FCI P/N 54200450)
(SEALED PLUG)

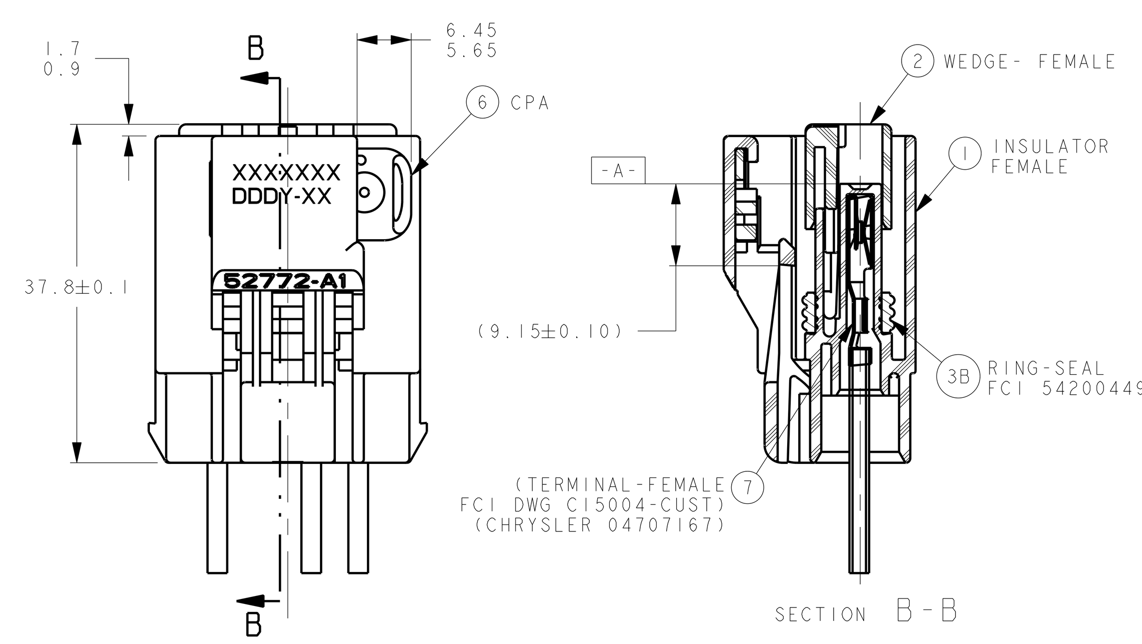

SEALED (PARTIAL) ASSEMBLY VIEW
SEE NOTE 7 SHIPPED WITHOUT END SEAL AND RETAINER

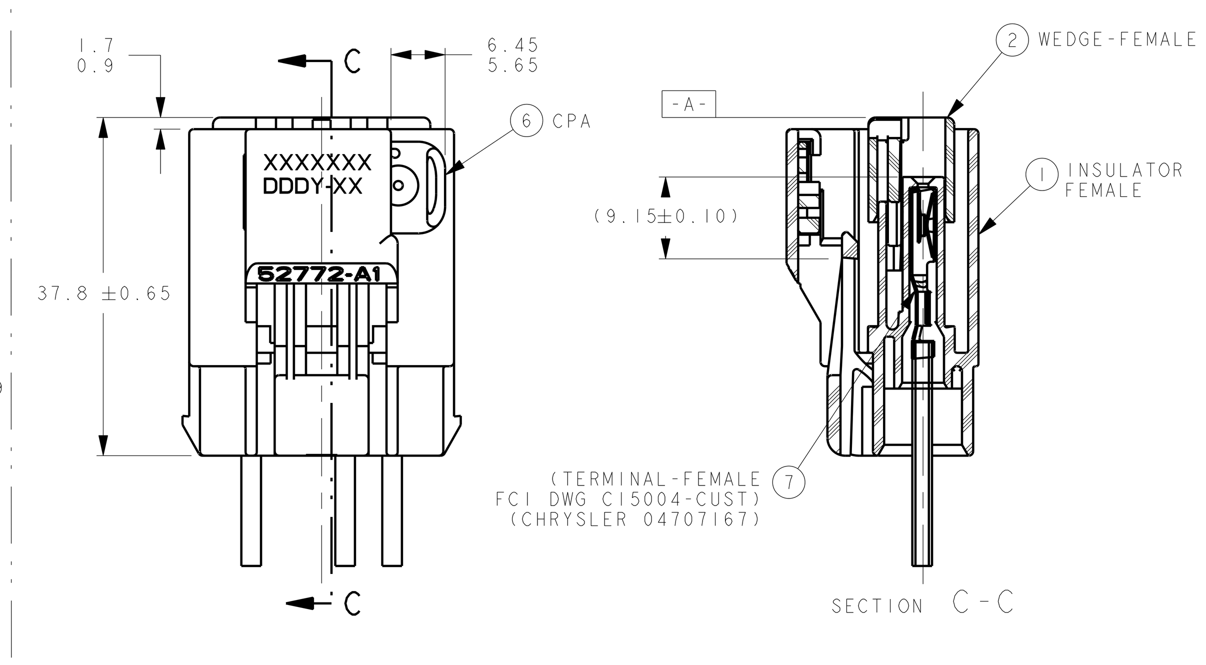

UNSEALED ASSEMBLY VIEW
SEE PART NUMBER CHART

MATING PART NUMBER CHART

INDEX TYPE	COLOR	SEALED/ UNSEALED	FCI (FEMALE ASSEMBLY PART NUMBERS)	CUSTOMER (FEMALE ASSEMBLY PART NUMBERS)	FCI (MATING ASSEMBLY PART NUMBER FOR REFERENCE ONLY)	CUSTOMER (MATING ASSEMBLY PART NUMBER FOR REFERENCE ONLY)
D	NATURAL	UNSEALED	54200404N	N/A	54200424,54200408	N/A
		UNSEALED	54200404	C 56038053	54200424,54200408	C 56042179,56038055
		SEALED	54200412N	N/A	54200416	N/A
		SEALED	54200412	C 04707264	54200416	C 04707380
	BLACK	SEALED	F915600	N/A	F225600	N/A
C	DK GREY	UNSEALED	54200403N	N/A	54200407	N/A
		UNSEALED	54200403	C 56038193	54200407	C 56038194
		SEALED	54200411N	N/A	54200415	N/A
		SEALED	54200411	C 04707263	54200415	C 04707379
		SEALED	55200428	N/A	54200429	N/A
	BLACK	SEALED	F815600	N/A	F125600	N/A
B	LT GREY	UNSEALED	54200402N	C 04688849	54200418,54200419 54200417,54200406	C 04495870,04661922 C 04707209, T.B.D.
		SEALED	54200450N	N/A	DIRECT CONNECT APPLICATION	
		SEALED	54200450	C 04707510	DIRECT CONNECT APPLICATION	
		SEALED	54200447N	C 04801217AA	54200417	C 04707209
		SEALED	54200422N	N/A	N/A	N/A
		SEALED	54200422	C 04759394AA	N/A	LH FUEL PUMP
		SEALED	54200410N	N/A	54200414,54200418 54200419,54200417	N/A
		SEALED	54200410	F 4L3T-14A464-AA	DIRECT CONNECT APPLICATION	
				C 04707256	54200414,54200418 54200419,54200417	C 04707267,04495870 C 04661922,04707209
		SEALED	54200495	N/A	F598500,F760600	N/A
		SEALED	54200480N	N/A	54200420/F598500	N/A
		SEALED	54200495	F AU5T-14A464-HAA	DIRECT CONNECT APPLICATION	
		SEALED	54200480	C 04759900AA	54200420/F598500	LOW PERM HDR
	BLACK	SEALED	F715600	N/A	F025600	N/A
A	BLACK	UNSEALED	54200400N	N/A	54200405	N/A
		UNSEALED	54200400	C 56038052	54200405	C 56038054
		UNSEALED	INDEX-A	INDEX-A	54200423	C 56042178
		SEALED	F333900	GM 13580766	DIRECT CONNECT INDEX-A	N/A
		SEALED	54200467N	N/A	F860600/DIR CONNECT	N/A
		SEALED	54200467	C 04868299AA	F860600/DIR CONNECT	SOLID STATE RELAY
		SEALED	54200409N	N/A	54200413,54200426	N/A
		SEALED	54200409	C 04707262	54200413,54200426	C 04707266,04759236
		SEALED	54200421N	N/A	54200425	N/A
		SEALED	54200421	C 04759251	54200425	C 04759253
		SEALED	F398500	N/A	F498500	N/A
		SEALED	INDEX-A	INDEX-A	54200426,54200427 54200468	C 04759236, 56042441 C 04759236AB
		SEALED	55200445	N/A	55200446	N/A

CUSTOMER: CHRYSLER - C
FORD - F
GENERAL MOTORS - GM

FCI	52772 OR 52772 H	SEE CHART
VENDOR	VENDOR CODE	P/N

ASSEMBLY PART NUMBER CHART

FCI P/N'S	54200400N	54200403N	54200404N	54200402N	54200400	54200403	54200404	54200450	54200409	54200410	54200411	54200412	55200428	54200421	54200422	54200467	54200495	F333900	54200480	F398500	54200447N	54200450N	54200409N	54200410N	54200411N	54200412N	54200421N	54200422N	54200467N	54200480N
	UNSEALED							SEALED																						
	W/O CPA				W/CPA			W/CPA													W/O CPA									
CUSTOMER P/N'S	X	X	X	C 04688849	C 56038052	C 56038193	C 56038053	C 04707510	C 04707262	C 04707256 / F 4L3T-14A464-AA	C 04707263	C 04707264	N/A	C 04759251	C 04759394AA	C 04868299AA	F AU5T-14A464-HAA	GM 13580766	C 04759900AA	N/A	C 04801217AA	X	X	X	X	X	X	X	X	X
ITEM	REQUIRED							REQUIRED																						
1 (54200431)	1				1				1					1		1		1		1			1				1		1	
1 (54200435)				1				1		1					1		1		1		1	1		1				1		1
1 (54200433)		1				1					1		1												1					
1 (54200434)			1				1					1														1				
2 (54200442)	1	1	1	1	1	1	1	1	1	1	1	1	1	1	1	1	1	1	1	1	1	1	1	1	1	1	1	1	1	1
3A (54200459)	X	X	X	X	X	X	X	1	1	1	1	1	1	1	1	1	1	1	1	1		1	1	1	1	1	1	1	1	1
3B (54200449)	X	X	X	X	X	X	X														1									
4A (54200428)	X	X	X	X	X	X	X		1	1	1	1											1	1	1	1				
4A (54200429)	X	X	X	X	X	X	X						1	1	1												1	1		
4A (54200461)	X	X	X	X	X	X	X									1	1	1											1	
4A (54200469)	X	X	X	X	X	X	X												1	1										1
4B (54200458)	X	X	X	X	X	X	X	1														1								
5 (54200440)	X	X	X	X	X	X	X	1	1	1	1	1	1	1	1	1	1	1	1	1		1	1	1	1	1	1	1	1	1
6 (54200003)	X	X	X	X	1	1	1	1	1	1	1	1	1	1	1	1	1	1	1	1	X	X	X	X	X	X	X	X	X	X
CONNECTOR ASSEMBLY TEMPERATURE CLASS PER SAE/USCAR-2 REV 5	3	3	3	3	3	3	3	3	3	3	3	3	3	3	3	3	3	3	3	3	3	3	3	3	3	3	3	3	3	3
PART CHANGE LEVEL (PCL)	U	U	U	U	U	U	U	U	U	U	U	U	U	U	U	U	V	X	U	V	U	U	U	U	U	U	U	U	U	U
CIR NO. 1	22 TO 10 SEE NOTES							PLUG	20,18,16 OR 14				SEE NOTE 15			20/14		12/10	12/10		SEE NOTE 7	SAME AS WITH CPA								
CIR NO. 2																20/14		12/10	18/14											
CIR NO. 3																12/10		20/14	18/14											
CIR NO. 4																12/10		20/14	12/10											
	WIRE GAGE								WIRE GAGE							SEE NOTE 18						WIRE GAGE								

ITEM	CLASS 3 FCI NO.	CHRYSLER NO.	COLOR	PART NAME (MAT'L)	INDEX	CLASS 4 FCI NO.	CLASS 4 COLOR	REQUIRED 55200445	REQUIRED F715600	REQUIRED F815600	REQUIRED F915600
1	54200431	04707186	BLK	INSULATOR-FEMALE (NYLON)	A	55200442	BLACK	1			
1	54200435	04688853	LT GRY	INSULATOR-FEMALE (NYLON)	B	F325600	BLACK		1		
1	54200433	04707188	DK GRY	INSULATOR-FEMALE (NYLON)	C	F425600	BLACK			1	
1	54200434	04707189	NATURAL	INSULATOR-FEMALE (NYLON)	D	F525600	BLACK				1
2	54200442	04707540	AQUA	WEDGE-FEMALE;(NYLON)		55200443	NATURAL	1	1	1	1
3A	54200459	04707191	RED	RING SEAL;(SILICONE)		*55200444	DK BLU	1	1	1	1
3B	54200449 (WAS C17007)	N/A	GRN	RING SEAL;(FLUOROSILICONE)							
4A	54200428	N/A	LT BLU	END SEAL;(SILICONE)		*55200439	DK BLU	1	1	1	1
4A	54200429	N/A	BURNT ORG	END SEAL;(SILICONE)		X	X	X	X	X	X
4A	54200461	N/A	BRT RED	END SEAL;(SILICONE) HYBRID		X	X	X	X	X	X
4A	54200469	N/A	LT GRY	END SEAL;(SILICONE) HYBRID		X	X	X	X	X	X
4B	54200458	N/A	BRT YEL	END SEAL;(SILICONE)W/O HOLES		X	X	X	X	X	X
5	54200440	N/A	BLK	RETAINER;(NYLON)		55200438	NATURAL	1	1	1	1
6	54200003	04687739	RED	CPA LATCH;(NYLON)		54200008	NATURAL	1	1	1	1
CONNECTOR ASSEMBLY TEMPERATURE CLASS PER SAE/USCAR-2 REV 5								4	4	4	4
PART CHANGE LEVEL (PCL)								W	W	W	W
WIRE GAUGE								20 TO 14			

ASSEMBLY PART NOS. (SEALED)

* 16 SEALS BAKED AT 450°F FOR 5 HOURS DURING CONTINUOUSLY INTRODUCED FRESH AIR TO DRIVE OFF VOLITIES

** 17 FORD PART NUMBERS ARE LISTED FOR REFERENCE ARE PPAP'D TO FORD 4L3T-14A464-AA DRAWING

18 MUST USE WIRE SIZES AS SPECIFIED FOR CIRCUIT LOCATION SHOWN: FOR EXAMPLE 12 OR 10 AWG, 20 TO 14 OR 18 TO 14 AWG

NOTES:

1. QUALITY ASSURANCE REQUIREMENTS PER CHRYSLER PS-7300: 1 ◇ SPC DATA REQUIRED
2. ENGINEERING APPROVAL OF SUPPLIER SAMPLES IS REQUIRED PRIOR TO AUTHORIZATION OF PART PRODUCTION
3. CHANGES IN DESIGN COMPOSITION OR PROCESSING FROM THE PART PREVIOUSLY APPROVED FOR PART PRODUCTION REQUIRES PRIOR ENGINEERING APPROVAL
4. WIRING FABRICATORS MUST PURCHASE FROM SOURCES SHOWN
5. ALL THE SEALED CONNECTOR APPLICATIONS MUST BE USED WITH CHRYSLER WIRE SPEC. MS-8288 OR MS-9502 THIN WALL X-LINK 20,18, 16, 14, 12 & 10 GAGE WIRES ONLY UNLESS OTHERWISE SPECIFIED SEE CHART (WIRE INSULATIONS Ø1.70 MIN TO Ø4.09 MAX.)
6. ALL NON-SEALED APPLICATIONS MAY BE USED WITH ANY WIRE INSULATION 22 GAGE THRU. 10 GAGE (EXCEPT AS NOTED) PROVIDING THAT A TERMINAL GRIP FOR THAT CORE/INSULATION COMBINATION IS SHOWN ON THE FEMALE TERMINAL DRAWING

   MAX. INSULATION CRIMP WIDTH = 4.50
   MAX. INSULATION CRIMP HEIGHT= 4.50
   MAX. INSULATION DIA. =4.09 (10 GA THIN WALL)
7. MUST BE USED WITH FLOUROSILICONE END SEAL FCI P/N 54200430, RETAINER & PROPER GAGE TEFLON WIRES FOR METHANOL OR DIESEL FUEL APPLICATIONS
8. USE WITH CAVITY PLUG FCI P/N 54200005. WHEN REQ'D USE WITH 2.80MM APEX FEM. TERM. PER C15004-CUST SYM. ABOUT CENTERLINE FOR 180° ORIENTATION
9. TEST METHOD PER SAE/USCAR-2 REV. 5, CONNECTOR ENGAGE & DISENGAGE WITH LATCH DEPRESSED FORCE NOT TO EXCEED 75 N. FOR THIS SYSTEM

   CPA SEATING FORCES - 40 N. MAX.

   WEDGE SEATING FORCES - 100 N. MAX.
10. SUPPLIER, MOLD & CAVITY I.D. MUST BE LEGIBLE
11. ANNUAL QUALITY REQUIREMENTS: IT IS PERMISSIBLE TO PERFORM CONTINUOUS CONFORMANCE PER FCI SPECIFICATION #AQA-001 INSTEAD OF ANNUAL LAYOUT & ANNUAL PV REQUIREMENTS OF QS-9000 SECTION 2 & PF-9600

   ALL NON-REFERENCE DIMENSIONS ARE REQUIRED

   - USE INDEX A, BLACK SEALED AND UNSEALED FOR ALL AFFECTED INSULATOR CAVITIES
   - CURRENT PRODUCTION TOOLING
   - POINT OF LAST RUN

   SERVICE TOOLING GUIDE INFORMATION PER APEX TRAINING MANUAL
12. MUST CONFORM TO THE FOLLOWING CHRYSLER/YNA STANDARDS:

   PF-9600 PERFORMANCE (CHRYSLER) EXCEPT AS NOTED ABOVE
   PS-7300 QUALITY ASSURANCE (CHRYSLER)
   PS-4480-CEK-4 (CHRYSLER) PART I.D. (G-009-2 YNA)
   PS-9065 REGRIND (CHRYSLER), (G-009-3 YNA)
   PS-9227 DATA EXCHANGE (CHRYSLER),(G-009-7 YNA)
   PS-10052 INFORMATION SECURITY (CHRYSLER)
13. THIS DRAWING (H59003) REPLACES CHRYSLER DRAWING NUMBER 04707254 LEVEL "R" CHRYSLER DRAWING IS FOR REFERENCE ONLY
14. FCI P/N WITH SUFFIX "N" DESIGNATES ASSEMBLIES W/O CPA
15. P/N'S WITH BURNT ORANGE END SEAL CAN BE USED WITH 12 OR 14 GAGE IN ANY COMBINATION OR ORDER OR WITH THREE 12 GAGE AND ONE 18 GAGE OR ONE 16 GAGE WIRE (ONE END)

ECN-NUMBER	DATE M-D-YY	REVISION	ZONE	CHANGE DESCRIPTION	DRAWN BY	CHK. BY	APPR. BY
11670	9-30-10	X	E16 A13 O20	P/N F333900 AND GM 13580766 ADDED. LETTERS C, F & GM ADDED TO INDICATE CUSTOMER NAMES. NOTE #18 ADDED FOR APPLICABLE WIRE SIZES, #10 REVISED AND P/N 54200429 WAS INCORRECTLY SHOWN AS 54200249, LETTER H ADDED TO DESIGNATE TEMP. CLASS 4 PARTS AND CHARTS UPDATED	ASHOK	SSS	SSS
11287	01-27-10	W	A23 E10	TEMP. CLASS 4 INSULATOR COLOR CHANGED TO BLACK FOR ALL POLARIZATIONS	ASHOK	SSS	SSS
11229	11-20-09	V1	I23 C12	PARTIAL SECTION "H-H" ADDED WITH END SEAL P/N 54200461 & TABLE UPDATED	RRR	SSS	SSS
11017	10-08-09	V	E16 E9	P/N'S 54200495, F398500 TEMP. CLASS 3 AND CORRESPONDING FORD P/N'S ADDED; P/N'S F715600, F815600 & F915600 FOR TEMP. CLASS 4 ADDED, BOTH CHARTS UPDATED	ASHOK	SSS	SSS
10415	6-03-08	U2	C9,D9 C10 B10 E7,E5 B23	NOTE 16 ALIGNED WITH BAKED SEAL PART NUMBERS. THE P/N 55200439 LOCATION CORRECTED, DCA CHANGED TO CHRYSLER, 54200008 WAS 55200008 SAE/USCAR-2 REV 5 WAS PF-9600. 75N WAS 90N DK GREEN ADDED, MATING PART CHART UPDATED.	ASHOK	SSS	SSS
10189	3-12-08	U1	F8	USE WITH 2.80MM APEX FEMALE TERMINAL NOTE ADDED FOR 180° ORIENTATION	ANSU	SSS	SSS
1	1	1	1	90° LATCH OPTION VIEWS & CALLOUTS FROM CHART DELETED	1	1	1
1	1	1	ALL	REDRAWN ON FCI TITLE BLOCK SEE REV'U' FOR PREVIOUS CHANGES	1	1	1

PRODUCT SPEC.	PACKAGING SPEC.	APPLICATION SPEC.	
APEX 2.8 MM	-	-	

THIS DRAWING AND ALL OTHER INFORMATION CONTAINED THEREIN IS PROPRIETARY AND THE PROPERTY OF FCI. This drawing may not be copied, reproduced or disclosed to any third party without the expressed written permission of FCI.
© FCI April 1999

TOLERANCES: 1 PLACE DIM ± 0.25; 2 PLACE DIM ± 0.10; ANGULAR DIM ± 2°
MATERIAL: NOTED ON COMPONENT PRINTS
SURFACE FINISH: -
COUNTERPART NO. H59012
COLOR: -
DO NOT SCALE DRAWING
TOOL NO. A-047
ECO Loc. Code NA
FCI
3RD ANGLE
DIMENSION IN MILLIMETERS
CAD SYSTEM pro / eng.
DWG SIZE A0

	DATE	NAME
DRAWN BY	05-25-05	RAJKUMAR
CHECKED BY	05-25-05	SUCHA SIAN
APPROVED BY	05-25-05	SUCHA SIAN

TITLE: CHART - ASSEMBLY
4WAY FEMALE
(2.80MM APEX CONN.SYSTEM)

ESR NO. WT-234, 6243
CAT. NO. -
DRAWING NUMBER H59003
FILE NAME H59003.DWG
SHEET 1 of 1
SCALE 4:1