GD25LQ16C

DATASHEET

Contents

1 FEATURES 4

2 GENERAL DESCRIPTION 5

3 MEMORY ORGANIZATION 7

4 DEVICE OPERATION 8

5 DATA PROTECTION 9

6 STATUS REGISTER 11

7 COMMANDS DESCRIPTION 13

7.1 WRITE ENABLE (WREN) (06H) 16
7.2 WRITE DISABLE (WRDI) (04H) 16
7.3 WRITE ENABLE FOR VOLATILE STATUS REGISTER (50H) 17
7.4 READ STATUS REGISTER (RDSR) (05H OR 35H) 17
7.5 WRITE STATUS REGISTER (WRSR) (01H) 18
7.6 READ DATA BYTES (READ) (03H) 19
7.7 READ DATA BYTES AT HIGHER SPEED (FAST READ) (0BH) 19
7.8 DUAL OUTPUT FAST READ (3BH) 20
7.9 QUAD OUTPUT FAST READ (6BH) 21
7.10 DUAL I/O FAST READ (BBH) 21
7.11 QUAD I/O FAST READ (EBH) 23
7.12 SET BURST WITH WRAP (77H) 24
7.13 PAGE PROGRAM (PP) (02H) 25
7.14 QUAD PAGE PROGRAM (32H) 26
7.15 SECTOR ERASE (SE) (20H) 27
7.16 32KB BLOCK ERASE (BE) (52H) 27
7.17 64KB BLOCK ERASE (BE) (D8H) 28
7.18 CHIP ERASE (CE) (60/C7H) 28
7.19 ENABLE/DISABLE SO TO OUTPUT RY/BY# (ESRY/DSRY) (70H/80H) 29
7.20 DEEP POWER-DOWN (DP) (B9H) 30
7.21 RELEASE FROM DEEP POWER-DOWN AND READ DEVICE ID (RDI) (ABH) 31
7.22 READ MANUFACTURE ID/ DEVICE ID (REMS) (90H) 32
7.23 READ MANUFACTURE ID/ DEVICE ID DUAL I/O (92H) 33
7.24 READ MANUFACTURE ID/ DEVICE ID QUAD I/O (94H) 34
7.25 READ IDENTIFICATION (RDID) (9FH) 35
7.26 PROGRAM/ERASE SUSPEND (PES) (75H) 36
7.27 PROGRAM/ERASE RESUME (PER) (7AH) 36
7.28 READ UNIQUE ID (4BH) 37
7.29 ERASE SECURITY REGISTERS (44H) 37
7.30 PROGRAM SECURITY REGISTERS (42H) 38

7.31 READ SECURITY REGISTERS (48H) 39
7.32 ENABLE RESET (66H) AND RESET (99H) 40
7.33 READ SERIAL FLASH DISCOVERABLE PARAMETER (5AH) 40

8 ELECTRICAL CHARACTERISTICS 45

8.1 POWER-ON TIMING 45
8.2 INITIAL DELIVERY STATE 45
8.3 ABSOLUTE MAXIMUM RATINGS 45
8.4 CAPACITANCE MEASUREMENT CONDITIONS 46
8.5 DC CHARACTERISTICS 47
8.6 AC CHARACTERISTICS 50

9 ORDERING INFORMATION 57

9.1 VALID PART NUMBERS 58

10 PACKAGE INFORMATION 60

10.1 PACKAGE SOP8 150MIL 60
10.2 PACKAGE SOP8 208MIL 61
10.3 PACKAGE VSOP8 150MIL 62
10.4 PACKAGE VSOP8 208MIL 63
10.5 PACKAGE USON8 (3*3MM) 64
10.6 PACKAGE USON8 (3*4MM) 65
10.7 PACKAGE USON8 (4*4MM, 0.45 THICKNESS) 66
10.8 PACKAGE WSON8 (6*5MM) 67
10.9 PACKAGE LGA8 3*2MM 68
10.10 PACKAGE WLCSP 69

11 REVISION HISTORY 70

1 FEATURES

- 16M-bit Serial Flash
  - -2048K-byte
  - -256 bytes per programmable page
- Standard, Dual, Quad SPI
  - -Standard SPI: SCLK, CS#, SI, SO, WP#, HOLD#
  - -Dual SPI: SCLK, CS#, IO0, IO1, WP#, HOLD#
  - -Quad SPI: SCLK, CS#, IO0, IO1, IO2, IO3
- High Speed Clock Frequency
  - -104MHz for fast read with 30PF load
  - -Dual I/O Data transfer up to 208Mbits/s
  - -Quad I/O Data transfer up to 416Mbits/s
- Allows XIP(execute in place) Operation
  - -Continuous Read With 8/16/32/64-byte Wrap
- Software/Hardware Write Protection
  - -Write protect all/portion of memory via software
  - -Enable/Disable protection with WP# Pin
  - -Top/Bottom Block protection
- Minimum 100,000 Program/Erase Cycles
- Fast Program/Erase Speed
  - -Page Program time: 0.7ms typical
  - -Sector Erase time: 40ms typical
  - -Block Erase time: 0.15/0.18s typical
  - -Chip Erase time: 5s typical
- Flexible Architecture
  - -Uniform Sector of 4K-byte
  - -Uniform Block of 32/64K-byte
  - -Erase/Program Suspend/Resume
- Low Power Consumption
  - -9uA typical stand-by current
  - -1uA typical power down current
- Advanced security Features
  - -128-bit Unique ID for each device
  - -3x512-Byte Security Registers With OTP Lock
- Single Power Supply Voltage
  - -Full voltage range: 1.65~2.1V
- Data retention
  - -20-year data retention typical

2 GENERAL DESCRIPTION

The GD25LQ16C (16M-bit) Serial flash supports the standard Serial Peripheral Interface (SPI), and supports the Dual/Quad SPI: Serial Clock, Chip Select, Serial Data I/O0 (SI), I/O1 (SO), I/O2 (WP#), and I/O3 (HOLD#). The Dual I/O data is transferred with speed of 208Mbits/s, the Quad I/O & Quad output data is transferred with speed of 416Mbits/s.

CONNECTION DIAGRAM

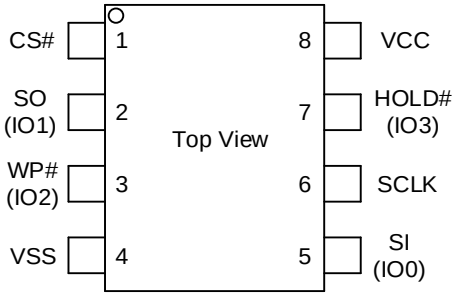

8 – LEAD VSOP/SOP

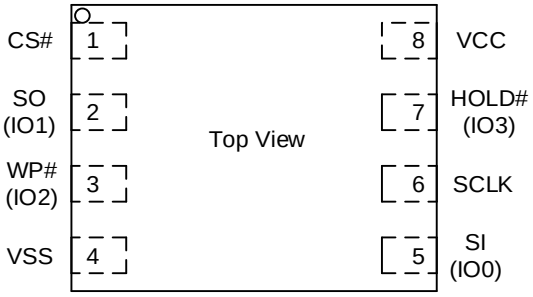

8 – LEAD WSON/USON/LGA

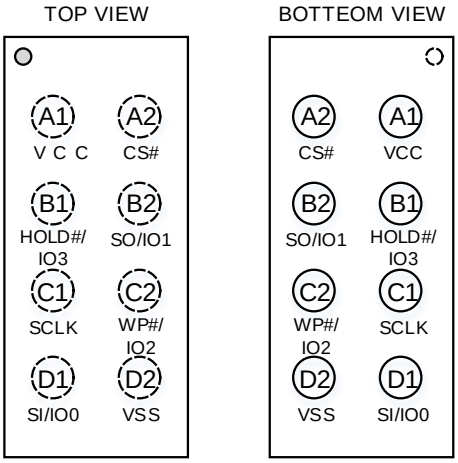

WLCSP

PIN DESCRIPTION

Pin Name	Ball Name	I/O	Description
CS#	**A2**	**I**	Chip Select Input
SO (IO1)	**B2**	**I/O**	Data Output (Data Input Output 1)
WP# (IO2)	**C2**	**I/O**	Write Protect Input (Data Input Output 2)
VSS	**D2**		Ground
SI (IO0)	**D1**	**I/O**	Data Input (Data Input Output 0)
SCLK	**C1**	**I**	Serial Clock Input
HOLD# (IO3)	**B1**	**I/O**	Hold Input (Data Input Output 3)
VCC	**A1**		Power Supply

Note: CS# must be driven high if chip is not selected. Please don't leave CS# floating any time after power is on.

BLOCK DIAGRAM

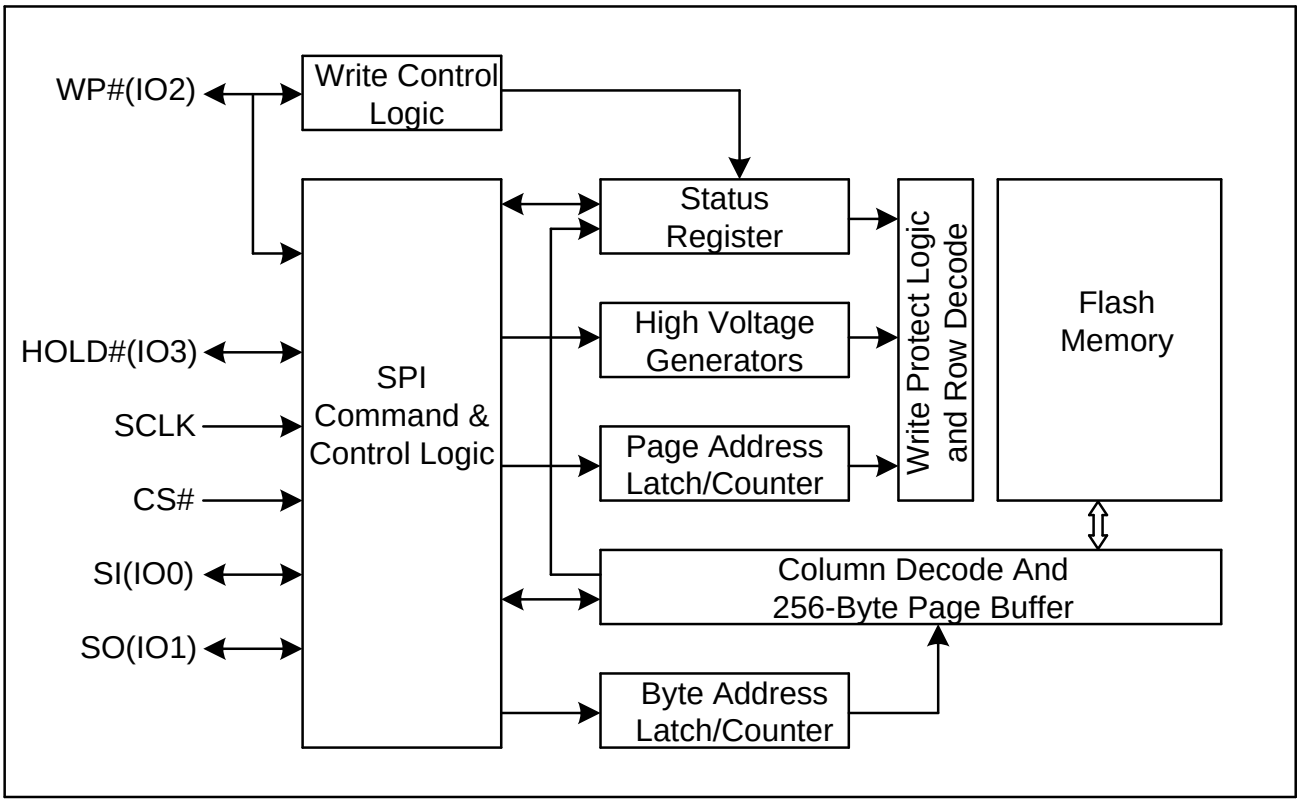

3 MEMORY ORGANIZATION

GD25LQ16C

Each device has	Each block has	Each sector has	Each page has	
2M	64/32K	4K	256	bytes
8K	256/128	16	-	pages
512	16/8	-	-	sectors
32/64	-	-	-	blocks

UNIFORM BLOCK SECTOR ARCHITECTURE

GD25LQ16C 64K Bytes Block Sector Architecture

Block	Sector	Address range	
31	511	1FF000H	1FFFFFH
	.....	.....	.....
	496	1F0000H	1F0FFFH
30	495	1EF000H	1EFFFFH
	.....	.....	.....
	480	1E0000H	1E0FFFH
.....	.....	.....	.....
	.....	.....	.....
	.....	.....	.....
.....	.....	.....	.....
	.....	.....	.....
	.....	.....	.....
2	47	02F000H	02FFFFH
	.....	.....	.....
	32	020000H	020FFFH
1	31	01F000H	01FFFFH
	.....	.....	.....
	16	010000H	010FFFH
0	15	00F000H	00FFFFH
	.....	.....	.....
	0	000000H	000FFFH

4 DEVICE OPERATION

SPI Mode

Standard SPI

The GD25LQ16C features a serial peripheral interface on 4 signals bus: Serial Clock (SCLK), Chip Select (CS#), Serial Data Input (SI) and Serial Data Output (SO). Both SPI bus mode 0 and 3 are supported. Input data is latched on the rising edge of SCLK and data shifts out on the falling edge of SCLK.

Dual SPI

The GD25LQ16C supports Dual SPI operation when using the “Dual Output Fast Read” and “Dual I/O Fast Read” (3BH and BBH) commands. These commands allow data to be transferred to or from the device at twice the rate of the standard SPI. When using the Dual SPI command the SI and SO pins become bidirectional I/O pins: IO0 and IO1.

Quad SPI

The GD25LQ16C supports Quad SPI operation when using the “Quad Output Fast Read”,” Quad I/O Fast Read”, (6BH, EBH) commands. These commands allow data to be transferred to or from the device at four times the rate of the standard SPI. When using the Quad SPI command the SI and SO pins become bidirectional I/O pins: IO0 and IO1, and WP# and HOLD# pins become IO2 and IO3. Quad SPI commands require the non-volatile Quad Enable bit (QE) in Status Register to be set.

Hold

The HOLD# signal goes low to stop any serial communications with the device, but doesn’t stop the operation of write status register, programming, or erasing in progress.

The operation of HOLD, need CS# keep low, and starts on falling edge of the HOLD# signal, with SCLK signal being low (if SCLK is not being low, HOLD operation will not start until SCLK being low). The HOLD condition ends on rising edge of HOLD# signal with SCLK being low (If SCLK is not being low, HOLD operation will not end until SCLK being low).

The SO is high impedance, both SI and SCLK don’t care during the HOLD operation, if CS# drives high during HOLD operation, it will reset the internal logic of the device. To re-start communication with chip, the HOLD# must be at high and then CS# must be at low.

Figure1. Hold Condition

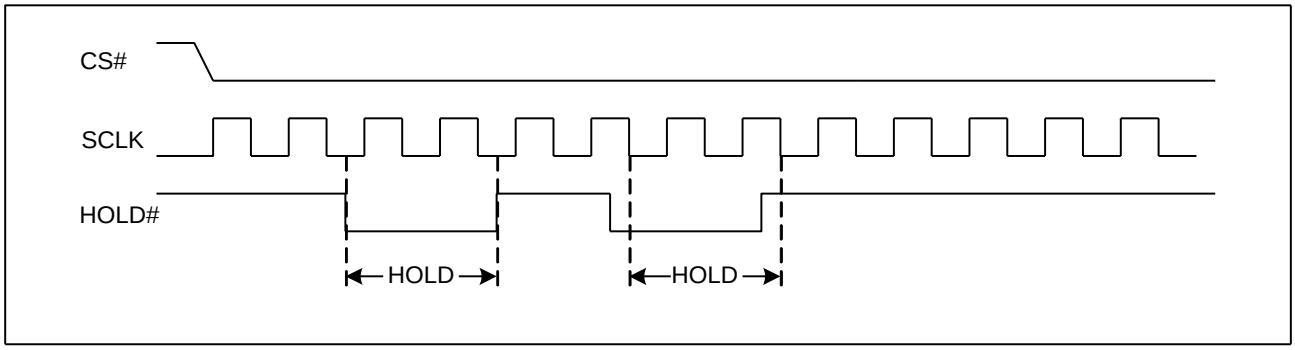

5 Data Protection

The GD25LQ16C provide the following data protection methods:

- Write Enable (WREN) command: The WREN command is set the Write Enable Latch bit (WEL). The WEL bit will return to reset by the following situation:
  -Power-Up/ Software reset (66H+99H)
  -Write Disable (WRDI)
  -Write Status Register (WRSR)
  -Page Program (PP)
  -Sector Erase (SE) / Block Erase (BE) / Chip Erase (CE)
- Software Protection Mode: The Block Protect (BP4, BP3, BP2, BP1, and BP0) bits define the section of the memory array that can be read but not change.
- Hardware Protection Mode: WP# goes low to protect the BP0~BP4 bits and SRP0~1 bits.
- Deep Power-Down Mode: In Deep Power-Down Mode, all commands are ignored except the Release from Deep Power-Down Mode command and software reset (66H+99H).

Table1. GD25LQ16C Protected area size (CMP=0)

Status Register Content					Memory Content			
BP4	**BP3**	**BP2**	**BP1**	**BP0**	**Blocks**	**Addresses**	**Density**	**Portion**
X	X	0	0	0	NONE	NONE	NONE	NONE
0	0	0	0	1	31	1F0000H-1FFFFFH	64KB	Upper 1/32
0	0	0	1	0	30 to 31	1E0000H-1FFFFFH	128KB	Upper 1/16
0	0	0	1	1	28 to 31	1C0000H-1FFFFFH	256KB	Upper 1/8
0	0	1	0	0	24 to 31	180000H-1FFFFFH	512KB	Upper 1/4
0	0	1	0	1	16 to 31	100000H-1FFFFFH	1M	Upper 1/2
0	1	0	0	1	0	000000H-00FFFFH	64KB	Lower 1/32
0	1	0	1	0	0 to 1	000000H-01FFFFH	128KB	Lower 1/16
0	1	0	1	1	0 to 3	000000H-03FFFFH	256KB	Lower 1/8
0	1	1	0	0	0 to 7	000000H-07FFFFH	512KB	Lower 1/4
0	1	1	0	1	0 to 15	000000H-0FFFFFH	1M	Lower 1/2
X	X	1	1	X	0 to 31	000000H-1FFFFFH	2M	ALL
1	0	0	0	1	31	1FF000H-1FFFFFH	4KB	Top Block
1	0	0	1	0	31	1FE000H-1FFFFFH	8KB	Top Block
1	0	0	1	1	31	1FC000H-1FFFFFH	16KB	Top Block
1	0	1	0	X	31	1F8000H-1FFFFFH	32KB	Top Block
1	1	0	0	1	0	000000H-000FFFH	4KB	Bottom Block
1	1	0	1	0	0	000000H-001FFFH	8KB	Bottom Block
1	1	0	1	1	0	000000H-003FFFH	16KB	Bottom Block
1	1	1	0	X	0	000000H-007FFFH	32KB	Bottom Block

Table1a. GD25LQ16C Protected area size (CMP=1)

Status Register Content					Memory Content			
BP4	BP3	BP2	BP1	BP0	Blocks	Addresses	Density	Portion
X	X	0	0	0	0 to 31	000000H-1FFFFFH	2M	ALL
0	0	0	0	1	0 to 30	000000H-1EFFFFH	1984KB	Lower 31/32
0	0	0	1	0	0 to 29	000000H-1DFFFFH	1920KB	Lower 15/16
0	0	0	1	1	0 to 27	000000H-1BFFFFH	1792KB	Lower 7/8
0	0	1	0	0	0 to 23	000000H-17FFFFH	1536KB	Lower 3/4
0	0	1	0	1	0 to 15	000000H-0FFFFFH	1M	Lower 1/2
0	1	0	0	1	1 to 31	010000H-1FFFFFH	1984KB	Upper 31/32
0	1	0	1	0	2 to 31	020000H-1FFFFFH	1920KB	Upper 15/16
0	1	0	1	1	4 to 31	040000H-1FFFFFH	1792KB	Upper 7/8
0	1	1	0	0	8 to 31	080000H-1FFFFFH	1536KB	Upper 3/4
0	1	1	0	1	16 to 31	100000H-1FFFFFH	1M	Upper 1/2
X	X	1	1	X	NONE	NONE	NONE	NONE
1	0	0	0	1	0 to 31	000000H-1FEFFFH	2044KB	L - 511/512
1	0	0	1	0	0 to 31	000000H-1FDFFFH	2040KB	L - 255/256
1	0	0	1	1	0 to 31	000000H-1FBFFFH	2032KB	L - 127/128
1	0	1	0	X	0 to 31	000000H-1F7FFFH	2016KB	L - 63/64
1	1	0	0	1	0 to 31	001000H-1FFFFFH	2044KB	U - 511/512
1	1	0	1	0	0 to 31	002000H-1FFFFFH	2040KB	U - 255/256
1	1	0	1	1	0 to 31	004000H-1FFFFFH	2032KB	U - 127/128
1	1	1	0	X	0 to 31	008000H-1FFFFFH	2016KB	U - 63/64

6 Status Register

S15	S14	S13	S12	S11	S10	S9	S8
SUS1	CMP	LB3	LB2	LB1	SUS2	QE	SRP1

S7	S6	S5	S4	S3	S2	S1	S0
SRP0	BP4	BP3	BP2	BP1	BP0	WEL	WIP

The status and control bits of the Status Register are as follows:

WIP bit

The Write in Progress (WIP) bit indicates whether the memory is busy in program/erase/write status register progress. When WIP bit sets to 1, means the device is busy in program/erase/write status register progress, when WIP bit sets 0, means the device is not in program/erase/write status register progress.

WEL bit

The Write Enable Latch (WEL) bit indicates the status of the internal Write Enable Latch. When set to 1 the internal Write Enable Latch is set, when set to 0 the internal Write Enable Latch is reset and no Write Status Register, Program or Erase command is accepted.

BP4, BP3, BP2, BP1, BP0 bits

The Block Protect (BP4, BP3, BP2, BP1, and BP0) bits are non-volatile. They define the size of the area to be software protected against Program and Erase commands. These bits are written with the Write Status Register (WRSR) command. When the Block Protect (BP4, BP3, BP2, BP1, BP0) bits are set to 1, the relevant memory area (as defined in Table1).becomes protected against Page Program (PP), Sector Erase (SE) and Block Erase (BE) commands. The Block Protect (BP4, BP3, BP2, BP1, and BP0) bits can be written provided that the Hardware Protected mode has not been set. The Chip Erase (CE) command is executed, if the Block Protect (BP2, BP1, and BP0) bits are 0 and CMP=0 or the Block Protect (BP2, BP1, and BP0) bits are 1 and CMP=1.

SRP1, SRP0 bits

The Status Register Protect (SRP1 and SRP0) bits are non-volatile Read/Write bits in the status register. The SRP bits control the method of write protection: software protection, hardware protection, power supply lock-down or one time programmable protection.

SRP1	SRP0	#WP	Status Register	Description
0	0	X	Software Protected	The Status Register can be written to after a Write Enable command, WEL=1.(Default)
0	1	0	Hardware Protected	WP#=0, the Status Register locked and cannot be written to.
0	1	1	Hardware Unprotected	WP#=1, the Status Register is unlocked and can be written to after a Write Enable command, WEL=1.
1	0	X	Power Supply Lock-Down(1)(2)	Status Register is protected and cannot be written to again until the next Power-Down, Power-Up cycle.
1	1	X	One Time Program(2)	Status Register is permanently protected and cannot be written to.

NOTE:

1. When SRP1, SRP0= (1, 0), a Power-Down, Power-Up cycle will change SRP1, SRP0 to (0, 0) state.
2. This feature is available on special order. Please contact GigaDevice for details.

QE bit

The Quad Enable (QE) bit is a non-volatile Read/Write bit in the Status Register that allows Quad operation. When the QE bit is set to 0 (Default) the WP# pin and HOLD# pin are enable. When the QE pin is set to 1, the Quad IO2 and IO3 pins are enabled. (It is best to set the QE bit to 0 to avoid short issues if the WP# or HOLD# pin is tied directly to the power supply or ground.)

LB3, LB2, LB1 bits

The LB3, LB2, LB1 bits are non-volatile One Time Program (OTP) bits in Status Register (S13-S11) that provide the write protect control and status to the Security Registers. The default state of LB3-LB1 are 0, the security registers are unlocked. The LB3-LB1 bits can be set to 1 individually using the Write Register instruction. The LB3-LB1 bits are One Time Programmable, once they are set to 1, the Security Registers will become read-only permanently.

CMP bit

The CMP bit is a non-volatile Read/Write bit in the Status Register (S14). It is used in conjunction with the BP4-BP0 bits to provide more flexibility for the array protection. Please see the Status registers Memory Protection table for details. The default setting is CMP=0.

SUS1, SUS2 bits

The SUS1 and SUS2 bits are read only bits in the status register (S15 and S10) that are set to 1 after executing an Program/Erase Suspend (75H) command (The Erase Suspend will set the SUS1 to 1,and the Program Suspend will set the SUS2 to 1). The SUS1 and SUS2 bits are cleared to 0 by Program/Erase Resume (7AH) command as well as a power-down, power-up cycle.

7 COMMANDS DESCRIPTION

All commands, addresses and data are shifted in and out of the device, beginning with the most significant bit on the first rising edge of SCLK after CS# is driven low. Then, the one-byte command code must be shifted in to the device, with most significant bit first on SI, and each bit is latched on the rising edges of SCLK.

See Table2, every command sequence starts with a one-byte command code. Depending on the command, this might be followed by address bytes, or by data bytes, or by both or none. CS# must be driven high after the last bit of the command sequence has been completed. For the command of Read, Fast Read, Read Status Register or Release from Deep Power-Down, and Read Device ID, the shifted-in command sequence is followed by a data-out sequence. All read instruction can be completed after any bit of the data-out sequence is being shifted out, and then CS# must be driven high to return to deselected status.

For the command of Page Program, Sector Erase, Block Erase, Chip Erase, Write Status Register, Write Enable, Write Disable or Deep Power-Down command, CS# must be driven high exactly at a byte boundary, otherwise the command is rejected, and is not executed. That is CS# must be driven high when the number of clock pulses after CS# being driven low is an exact multiple of eight. For Page Program, if at any time the input byte is not a full byte, nothing will happen and WEL will not be reset.

Table2. Commands (Standard/Dual/Quad SPI)

Command Name	Byte 1	Byte 2	Byte 3	Byte 4	Byte 5	Byte 6	n-Bytes
Write Enable	06H						
Write Disable	04H						
Volatile SR Write Enable	50H						
Read Status Register	05H	(S7-S0)					(continuous)
Read Status Register-1	35H	(S15-S8)					(continuous)
Write Status Register	01H	S7-S0	S15-S8				
Read Data	03H	A23-A16	A15-A8	A7-A0	(D7-D0)	(Next byte)	(continuous)
Fast Read	0BH	A23-A16	A15-A8	A7-A0	dummy	(D7-D0)	(continuous)
Dual Output Fast Read	3BH	A23-A16	A15-A8	A7-A0	dummy	(D7-D0)(1)	(continuous)
Dual I/O Fast Read	BBH	A23-A8(2)	A7-A0 M7-M0(2)	(D7-D0)(1)			(continuous)
Quad Output Fast Read	6BH	A23-A16	A15-A8	A7-A0	dummy	(D7-D0)(3)	(continuous)
Quad I/O Fast Read	EBH	A23-A0 M7-M0(4)	dummy(5)	(D7-D0)(3)			(continuous)
Page Program	02H	A23-A16	A15-A8	A7-A0	D7-D0	Next byte	
Quad Page Program	32H	A23-A16	A15-A8	A7-A0	D7-D0		
Sector Erase	20H	A23-A16	A15-A8	A7-A0			
Block Erase(32K)	52H	A23-A16	A15-A8	A7-A0			
Block Erase(64K)	D8H	A23-A16	A15-A8	A7-A0			
Chip Erase	C7/60H						
Enable Reset	66H						

Reset	99H						
Set Burst with Wrap	77H	W6-W4					
Program/Erase Suspend	75H						
Program/Erase Resume	7AH						
Enable SO to output RY/BY#	70H						
Disable SO to output RY/BY#	80H						
Deep Power-Down	B9H						
Release From Deep Power-Down, And Read Device ID	ABH	dummy	dummy	dummy	(ID7-ID0)		(continuous)
Release From Deep Power-Down	ABH						
Manufacturer/ Device ID	90H	00H	00H	00H	(M7-M0)	(ID7-ID0)	(continuous)
Manufacturer/ Device ID by Dual I/O	92H	A23-A8	A7-A0, M[7:0]	(M7-M0) (ID7-ID0)			(continuous)
Manufacturer/ Device ID by Quad I/O	94H	A23-A0, M[7:0]	dummy	(M7-M0) (ID7-ID0)			(continuous)
Read Serial Flash Discoverable Parameter	5AH	A23-A16	A15-A8	A7-A0	dummy	(D7-D0)	(continuous)
Read Unique ID	4BH	00H	00H	00H	dummy	(UID7-UID0)	(continuous)
Read Identification	9FH	(M7-M0)	(ID15-ID8)	(ID7-ID0)			(continuous)
Erase Security Registers(6)	44H	A23-A16	A15-A8	A7-A0			
Program Security Registers(6)	42H	A23-A16	A15-A8	A7-A0	D7-D0	D7-D0	
Read Security Registers(6)	48H	A23-A16	A15-A8	A7-A0	dummy	(D7-D0)	

NOTE:

1. Dual Output data

IO0 = (D6, D4, D2, D0)

IO1 = (D7, D5, D3, D1)

2. Dual Input Address

IO0 = A22, A20, A18, A16, A14, A12, A10, A8 A6, A4, A2, A0, M6, M4, M2, M0

IO1 = A23, A21, A19, A17, A15, A13, A11, A9 A7, A5, A3, A1, M7, M5, M3, M1

3. Quad Output Data

IO0 = (D4, D0, …..)

IO1 = (D5, D1, …..)

IO2 = (D6, D2, …..)

IO3 = (D7, D3,…..)

4. Quad Input Address

IO0 = A20, A16, A12, A8, A4, A0, M4, M0

IO1 = A21, A17, A13, A9, A5, A1, M5, M1

IO2 = A22, A18, A14, A10, A6, A2, M6, M2

IO3 = A23, A19, A15, A11, A7, A3, M7, M3

5. Fast Read Quad I/O Data

IO0 = (x, x, x, x, D4, D0,…)

IO1 = (x, x, x, x, D5, D1,…)

IO2 = (x, x, x, x, D6, D2,…)

IO3 = (x, x, x, x, D7, D3,…)

6. Security Registers Address:

Security Register1: A23-A16=00H, A15-A9=0001000b, A8-A0= Byte Address;

Security Register2: A23-A16=00H, A15-A9=0010000b, A8-A0= Byte Address;

Security Register3: A23-A16=00H, A15-A9=0011000b, A8-A0= Byte Address.

TABLE OF ID DEFINITIONS

GD25LQ16C

Operation Code	M7-M0	ID15-ID8	ID7-ID0
9FH	C8	60	15
90H	C8		14
ABH			14

7.1 Write Enable (WREN) (06H)

The Write Enable (WREN) command is for setting the Write Enable Latch (WEL) bit. The Write Enable Latch (WEL) bit must be set prior to every Page Program (PP), Sector Erase (SE), Block Erase (BE), Chip Erase (CE), Write Status Register (WRSR) and Erase/Program Security Registers command. The Write Enable (WREN) command sequence: CS# goes low → sending the Write Enable command → CS# goes high.

Figure2. Write Enable Sequence Diagram

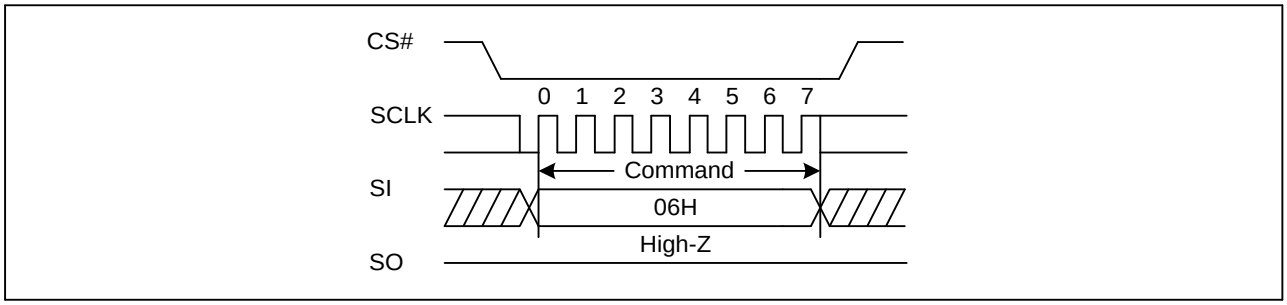

7.2 Write Disable (WRDI) (04H)

The Write Disable command is for resetting the Write Enable Latch (WEL) bit. The Write Disable command sequence: CS# goes low →Sending the Write Disable command →CS# goes high. The WEL bit is reset by following condition: Power-up and upon completion of the Write Status Register, Page Program, Sector Erase, Block Erase, Chip Erase, Erase/Program Security Registers and Reset commands.

Figure3. Write Disable Sequence Diagram

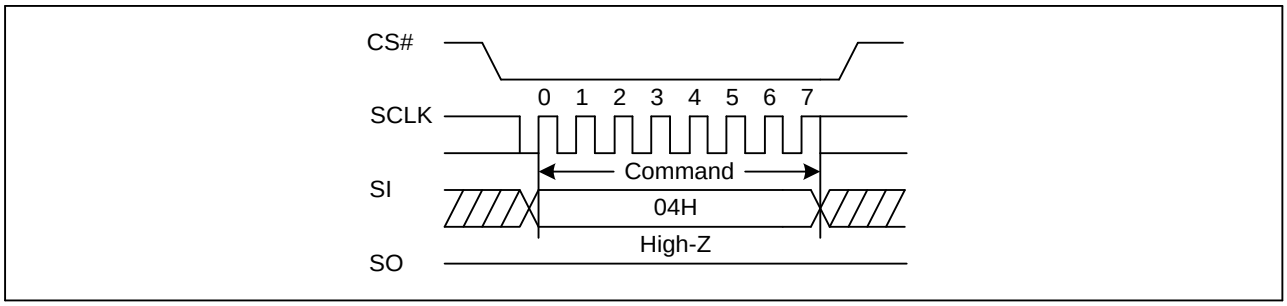

7.3 Write Enable for Volatile Status Register (50H)

The non-volatile Status Register bits can also be written to as volatile bits. This gives more flexibility to change the system configuration and memory protection schemes quickly without waiting for the typical non-volatile bit write cycles or affecting the endurance of the Status Register non-volatile bits. The Write Enable for Volatile Status Register command must be issued prior to a Write Status Register command and any other commands can't be inserted between them. Otherwise, Write Enable for Volatile Status Register will be cleared. The Write Enable for Volatile Status Register command will not set the Write Enable Latch bit, it is only valid for the Write Status Register command to change the volatile Status Register bit values.

Figure4. Write Enable for Volatile Status Register Sequence Diagram

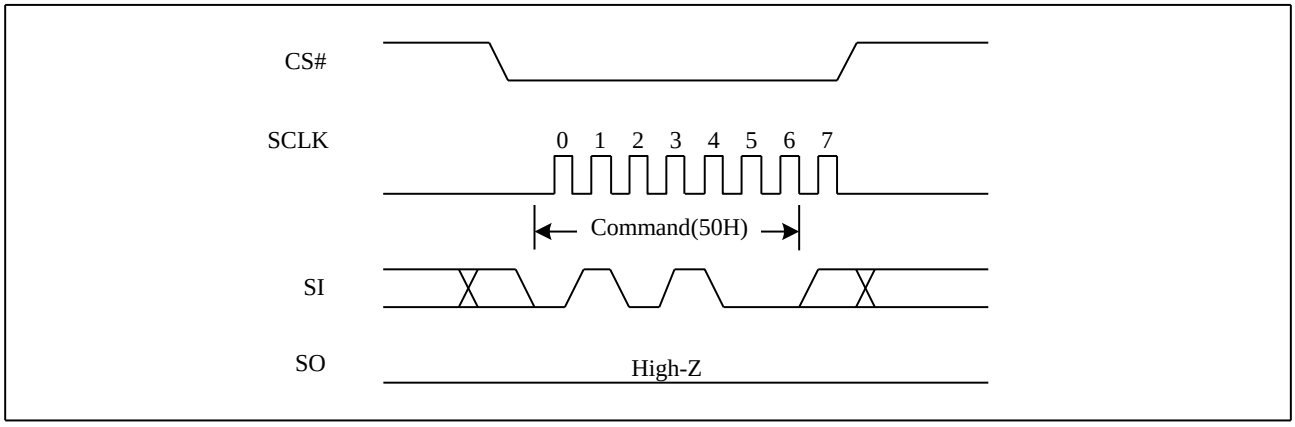

7.4 Read Status Register (RDSR) (05H or 35H)

The Read Status Register (RDSR) command is for reading the Status Register. The Status Register may be read at any time, even while a Program, Erase or Write Status Register cycle is in progress. When one of these cycles is in progress, it is recommended to check the Write in Progress (WIP) bit before sending a new command to the device. It is also possible to read the Status Register continuously. For command code "05H", the SO will output Status Register bits S7~S0. The command code "35H", the SO will output Status Register bits S15~S8.

Figure5. Read Status Register Sequence Diagram

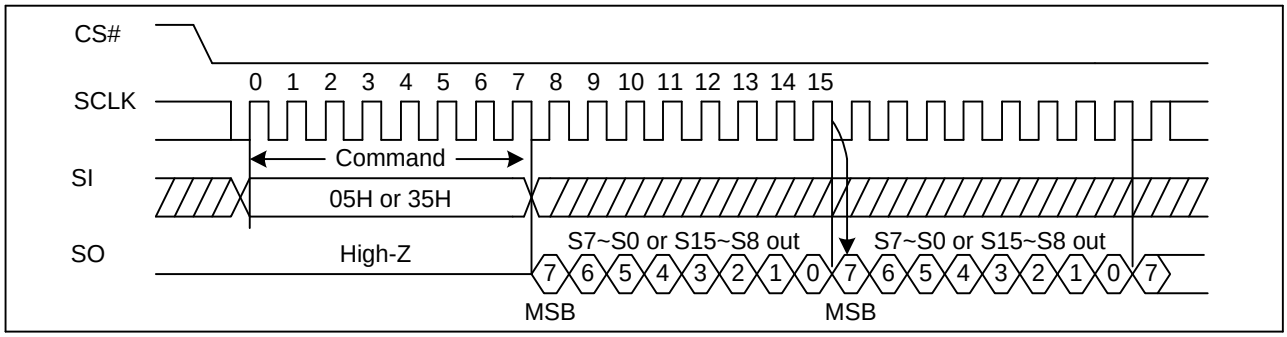

7.5 Write Status Register (WRSR) (01H)

The Write Status Register (WRSR) command allows new values to be written to the Status Register. Before it can be accepted, a Write Enable (WREN) command must previously have been executed. After the Write Enable (WREN) command has been decoded and executed, the device sets the Write Enable Latch (WEL).

The Write Status Register (WRSR) command has no effect on S15, S10, S1 and S0 of the Status Register. CS# must be driven high after the eighth or sixteen bit of the data byte has been latched in. If not, the Write Status Register (WRSR) command is not executed. If CS# is driven high after eighth bit of the data byte, the CMP and QE and SRP1 bits will be cleared to 0. As soon as CS# is driven high, the self-timed Write Status Register cycle (whose duration is t_W) is initiated. While the Write Status Register cycle is in progress, the Status Register may still be read to check the value of the Write In Progress (WIP) bit. The Write In Progress (WIP) bit is 1 during the self-timed Write Status Register cycle, and is 0 when it is completed. When the cycle is completed, the Write Enable Latch (WEL) is reset.

The Write Status Register (WRSR) command allows the user to change the values of the Block Protect (BP4, BP3, BP2, BP1, and BP0) bits, to define the size of the area that is to be treated as read-only, as defined in Table1. The Write Status Register (WRSR) command also allows the user to set or reset the Status Register Protect (SRP1 and SRP0) bits in accordance with the Write Protect (WP#) signal. The Status Register Protect (SRP1 and SRP0) bits and Write Protect (WP#) signal allow the device to be put in the Hardware Protected Mode. The Write Status Register (WRSR) command is not executed once the Hardware Protected Mode is entered.

Figure6. Write Status Register Sequence Diagram

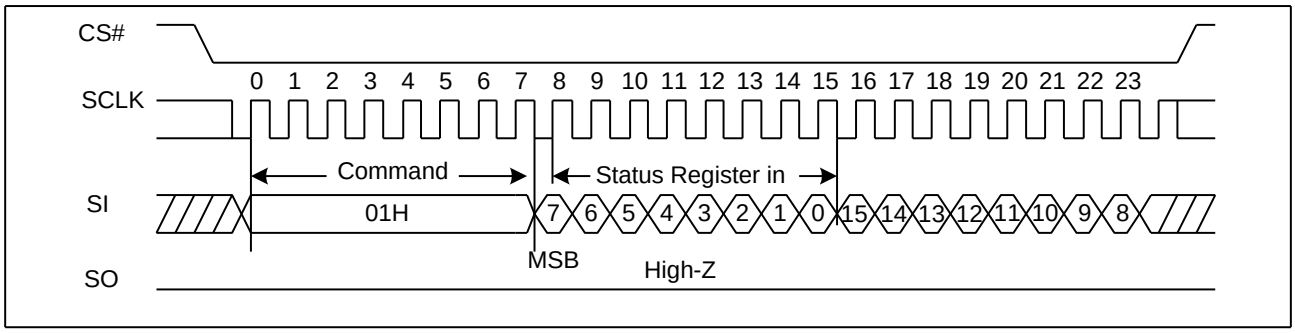

7.6 Read Data Bytes (READ) (03H)

The Read Data Bytes (READ) command is followed by a 3-byte address (A23-A0), and each bit is latched-in on the rising edge of SCLK. Then the memory content, at that address, is shifted out on SO, and each bit is shifted out, at a Max frequency f_R, on the falling edge of SCLK. The first byte addressed can be at any location. The address is automatically incremented to the next higher address after each byte of data is shifted out. The whole memory can, therefore, be read with a single Read Data Bytes (READ) command. Any Read Data Bytes (READ) command, while an Erase, Program or Write cycle is in progress, is rejected without having any effects on the cycle that is in progress.

Figure7. Read Data Bytes Sequence Diagram

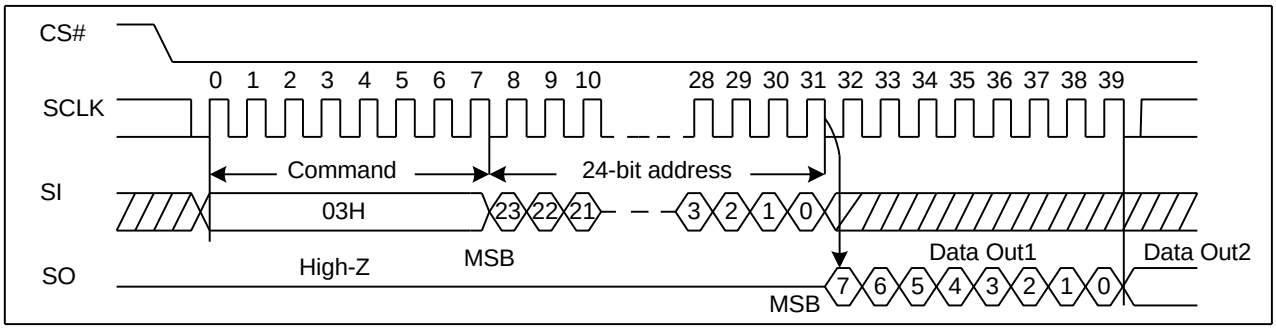

7.7 Read Data Bytes at Higher Speed (Fast Read) (0BH)

The Read Data Bytes at Higher Speed (Fast Read) command is for quickly reading data out. It is followed by a 3-byte address (A23-A0) and a dummy byte, and each bit is latched-in on the rising edge of SCLK. Then the memory content, at that address, is shifted out on SO, and each bit is shifted out, at a Max frequency f_C, on the falling edge of SCLK. The first byte addressed can be at any location. The address is automatically incremented to the next higher address after each byte of data is shifted out.

Figure8. Read Data Bytes at Higher Speed Sequence Diagram

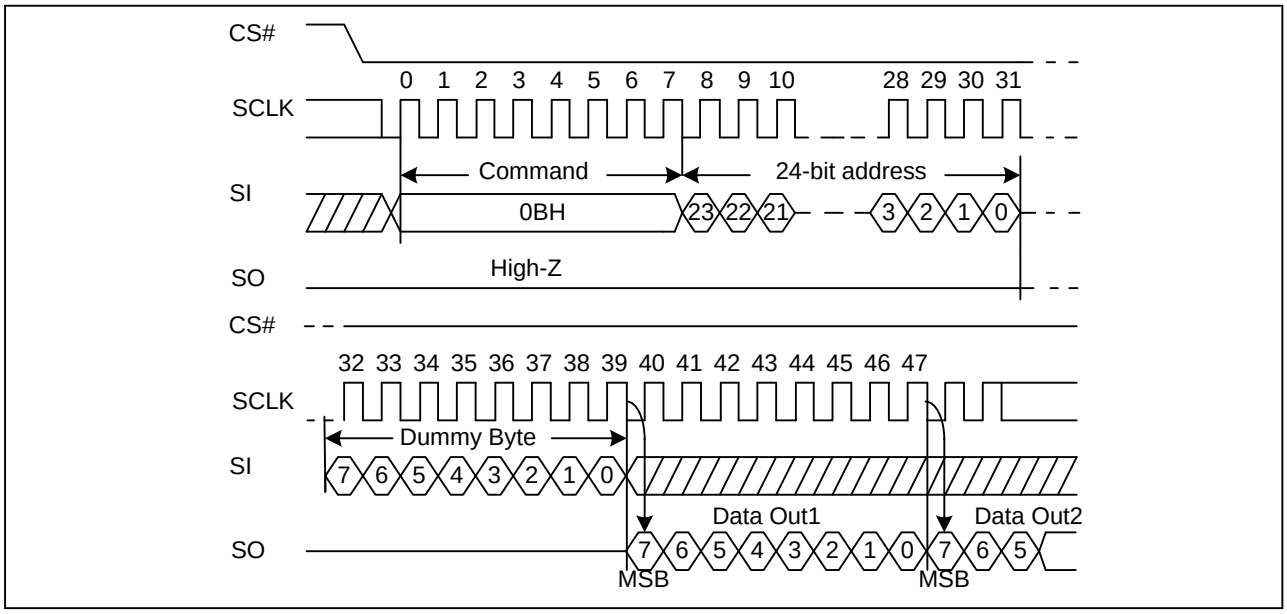

7.8 Dual Output Fast Read (3BH)

The Dual Output Fast Read command is followed by 3-byte address (A23-A0) and a dummy byte, and each bit is latched in on the rising edge of SCLK, then the memory contents are shifted out 2-bit per clock cycle from SI and SO.

The command sequence is shown in followed Figure9. The first byte addressed can be at any location. The address is automatically incremented to the next higher address after each byte of data is shifted out.

Figure9. Dual Output Fast Read Sequence Diagram

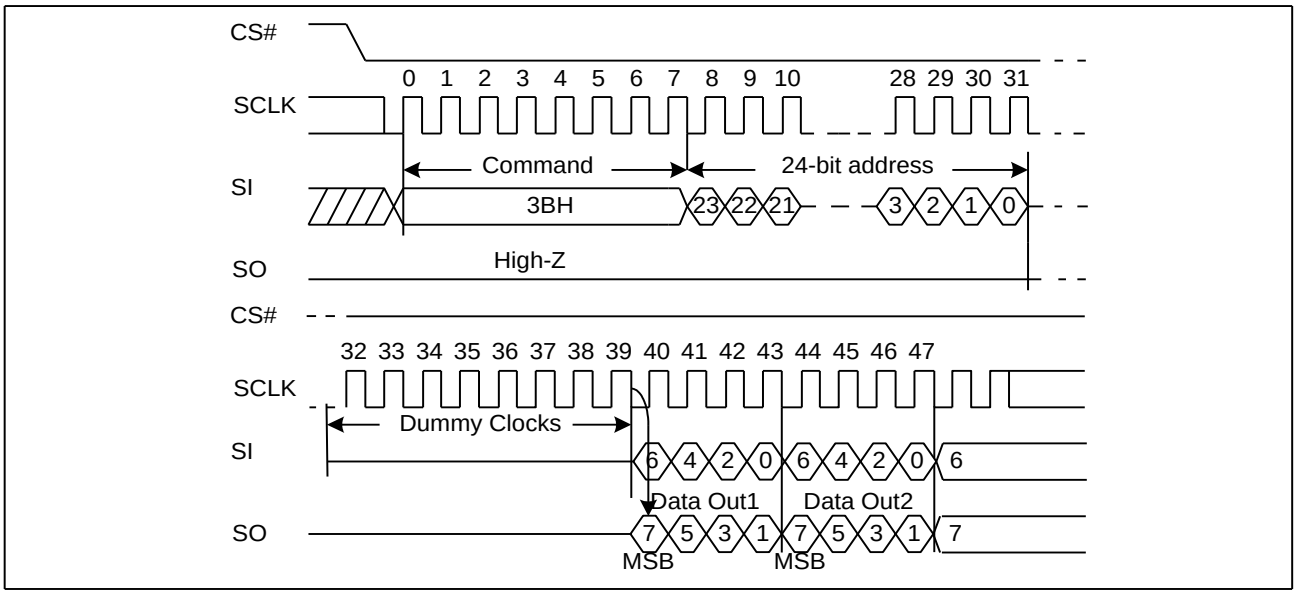

7.9 Quad Output Fast Read (6BH)

The Quad Output Fast Read command is followed by 3-byte address (A23-A0) and a dummy byte, and each bit is latched in on the rising edge of SCLK, then the memory contents are shifted out 4-bit per clock cycle from IO3, IO2, IO1 and IO0. The command sequence is shown in followed Figure10. The first byte addressed can be at any location. The address is automatically incremented to the next higher address after each byte of data is shifted out. The Quad Enable bit (QE) of Status Register (S9) must be set to enable for the Quad Output Fast Read command.

Figure10. Quad Output Fast Read Sequence Diagram

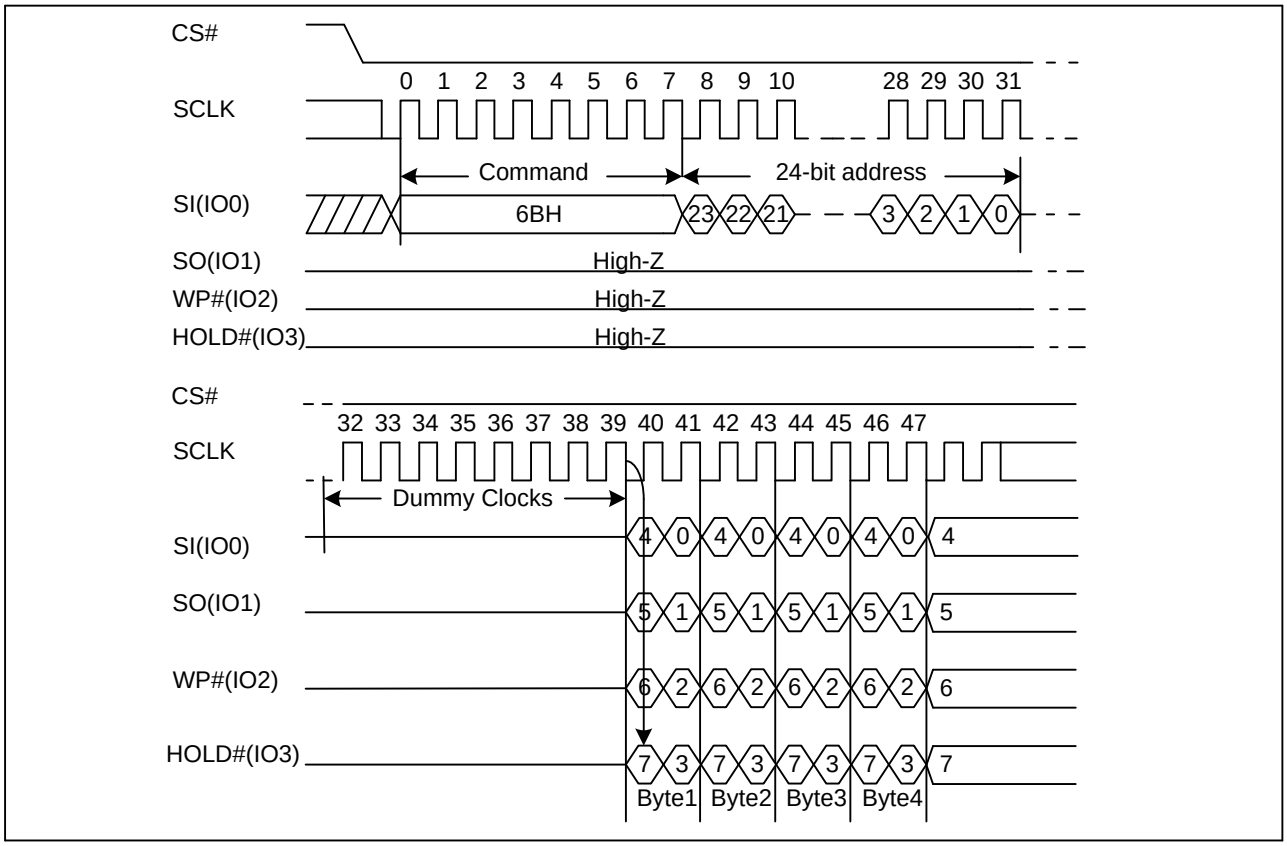

7.10 Dual I/O Fast Read (BBH)

The Dual I/O Fast Read command is similar to the Dual Output Fast Read command but with the capability to input the 3-byte address (A23-0) and a “Continuous Read Mode” byte 2-bit per clock by SI and SO, and each bit is latched in on the rising edge of SCLK, then the memory contents are shifted out 2-bit per clock cycle from SI and SO. The command sequence is shown in followed Figure11. The first byte addressed can be at any location. The address is automatically incremented to the next higher address after each byte of data is shifted out.

Dual I/O Fast Read with “Continuous Read Mode”

The Dual I/O Fast Read command can further reduce command overhead through setting the “Continuous Read Mode” bits (M7-0) after the input 3-byte address (A23-A0). If the “Continuous Read Mode” bits (M5-4) = (1, 0), then the next Dual I/O Fast Read command (after CS# is raised and then lowered) does not require the BBH command code. The command sequence is shown in followed Figure11. If the “Continuous Read Mode” bits (M5-4) do not equal (1, 0), the next command requires the command code, thus returning to normal operation. A “Continuous Read Mode” Reset command can be used to reset (M5-4) before issuing normal command.

Figure11. Dual I/O Fast Read Sequence Diagram (M5-4≠ (1, 0))

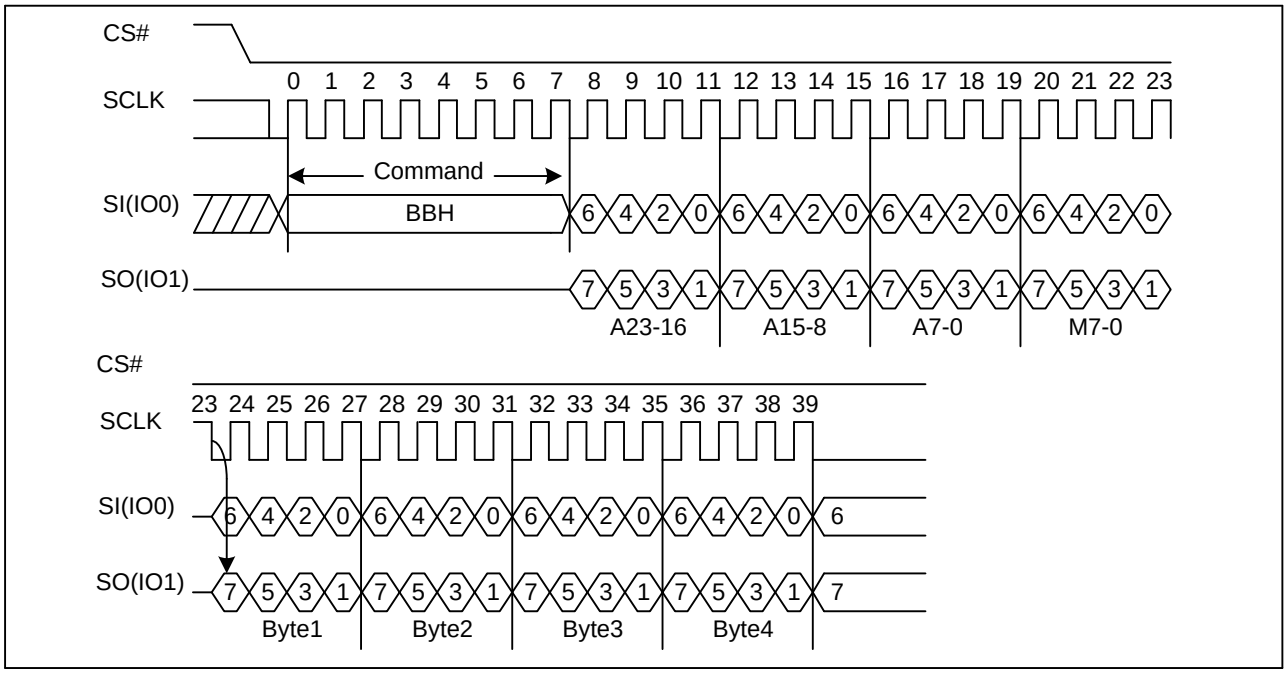

Figure11a. Dual I/O Fast Read Sequence Diagram (M5-4= (1, 0))

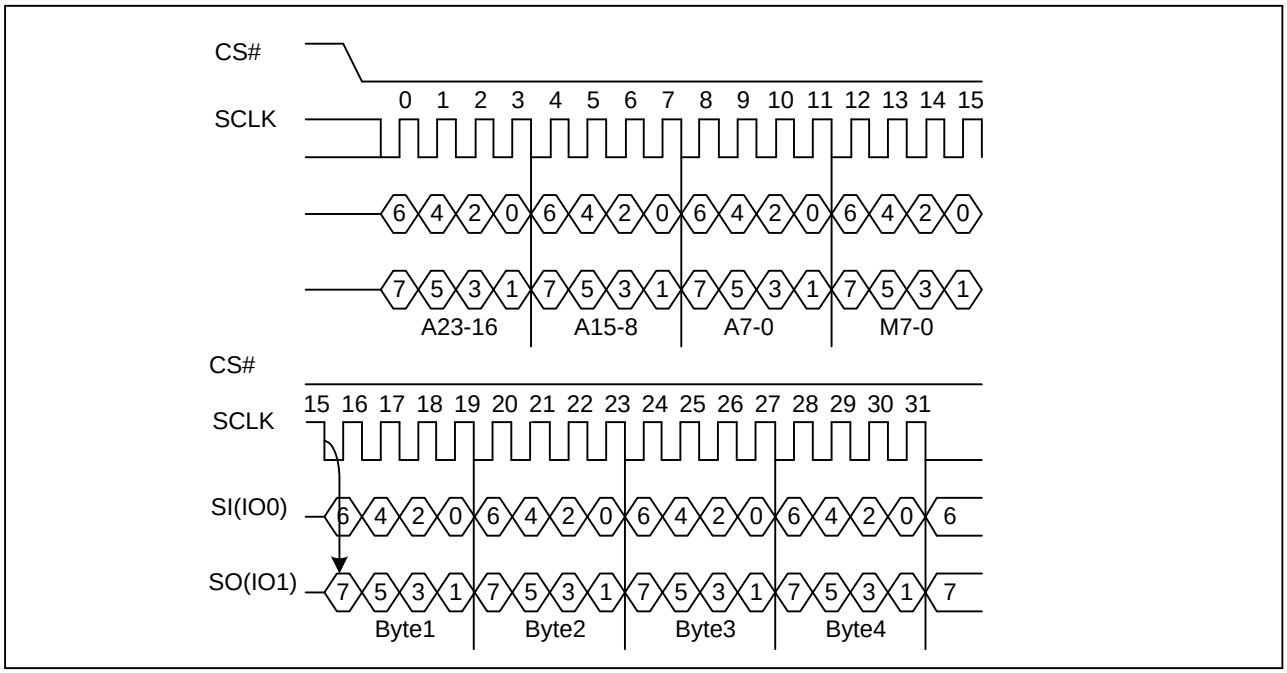

7.11 Quad I/O Fast Read (EBH)

The Quad I/O Fast Read command is similar to the Dual I/O Fast Read command but with the capability to input the 3-byte address (A23-0) and a "Continuous Read Mode" byte and 4-dummy clock 4-bit per clock by IO0, IO1, IO3, IO4, and each bit is latched in on the rising edge of SCLK, then the memory contents are shifted out 4-bit per clock cycle from IO0, IO1, IO2, IO3. The command sequence is shown in followed Figure12. The first byte addressed can be at any location. The address is automatically incremented to the next higher address after each byte of data is shifted out. The Quad Enable bit (QE) of Status Register (S9) must be set to enable for the Quad I/O Fast read command.

Quad I/O Fast Read with "Continuous Read Mode"

The Quad I/O Fast Read command can further reduce command overhead through setting the "Continuous Read Mode" bits (M7-0) after the input 3-byte address (A23-A0). If the "Continuous Read Mode" bits (M5-4) = (1, 0), then the next Quad I/O Fast Read command (after CS# is raised and then lowered) does not require the EBH command code. The command sequence is shown in followed Figure12a. If the "Continuous Read Mode" bits (M5-4) do not equal to (1, 0), the next command requires the command code, thus returning to normal operation. A "Continuous Read Mode" Reset command can be used to reset (M5-4) before issuing normal command.

Figure12. Quad I/O Fast Read Sequence Diagram (M5-4≠ (1, 0))

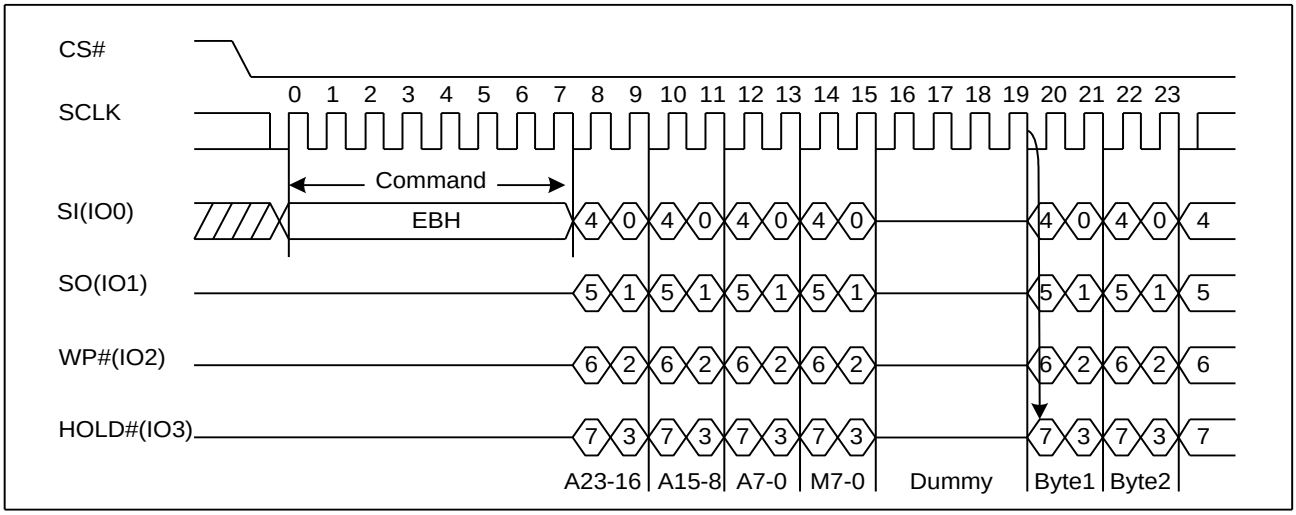

Figure12a. Quad I/O Fast Read Sequence Diagram (M5-4= (1, 0))

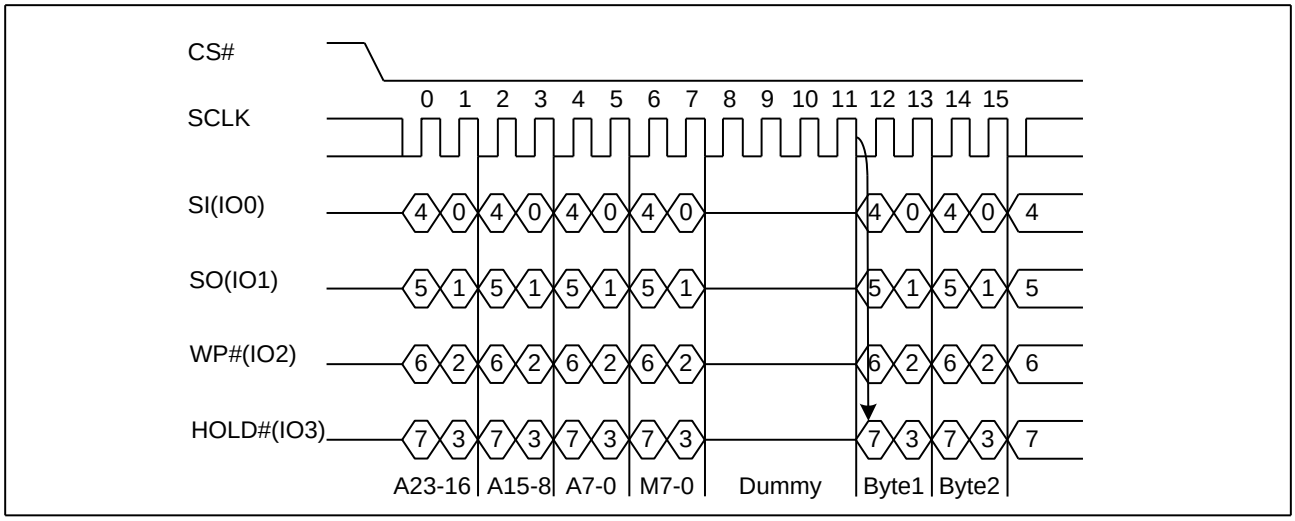

Quad I/O Fast Read with "8/16/32/64-Byte Wrap Around" in Standard SPI mode

The Quad I/O Fast Read command can be used to access a specific portion within a page by issuing "Set Burst with Wrap" (77H) commands prior to EBH. The "Set Burst with Wrap" (77H) command can either enable or disable the "Wrap Around" feature for the following EBH commands. When "Wrap Around" is enabled, the data being accessed can be limited to either an 8/16/32/64-byte section of a 256-byte page. The output data starts at the initial address specified in the command, once it reaches the ending boundary of the 8/16/32/64-byte section, the output will wrap around the beginning boundary automatically until CS# is pulled high to terminate the command.

The Burst with Wrap feature allows applications that use cache to quickly fetch a critical address and then fill the cache afterwards within a fixed length (8/16/32/64-byte) of data without issuing multiple read commands. The "Set Burst with Wrap" command allows three "Wrap Bits" W6-W4 to be set. The W4 bit is used to enable or disable the "Wrap Around" operation while W6-W5 is used to specify the length of the wrap around section within a page.

7.12 Set Burst with Wrap (77H)

The Set Burst with Wrap command is used in conjunction with "Quad I/O Fast Read" command to access a fixed length of 8/16/32/64-byte section within a 256-byte page, in standard SPI mode.

The Set Burst with Wrap command sequence: CS# goes low → Send Set Burst with Wrap command → Send 24 dummy bits → Send 8 bits "Wrap bits" → CS# goes high.

W6,W5	W4=0		W4=1 (default)	
	Wrap Around	Wrap Length	Wrap Around	Wrap Length
0, 0	Yes	8-byte	No	N/A
0, 1	Yes	16-byte	No	N/A
1, 0	Yes	32-byte	No	N/A
1, 1	Yes	64-byte	No	N/A

If the W6-W4 bits are set by the Set Burst with Wrap command, all the following "Quad I/O Fast Read" command will use the W6-W4 setting to access the 8/16/32/64-byte section within any page. To exit the "Wrap Around" function and return to normal read operation, another Set Burst with Wrap command should be issued to set W4=1.

Figure16. Set Burst with Wrap Sequence Diagram

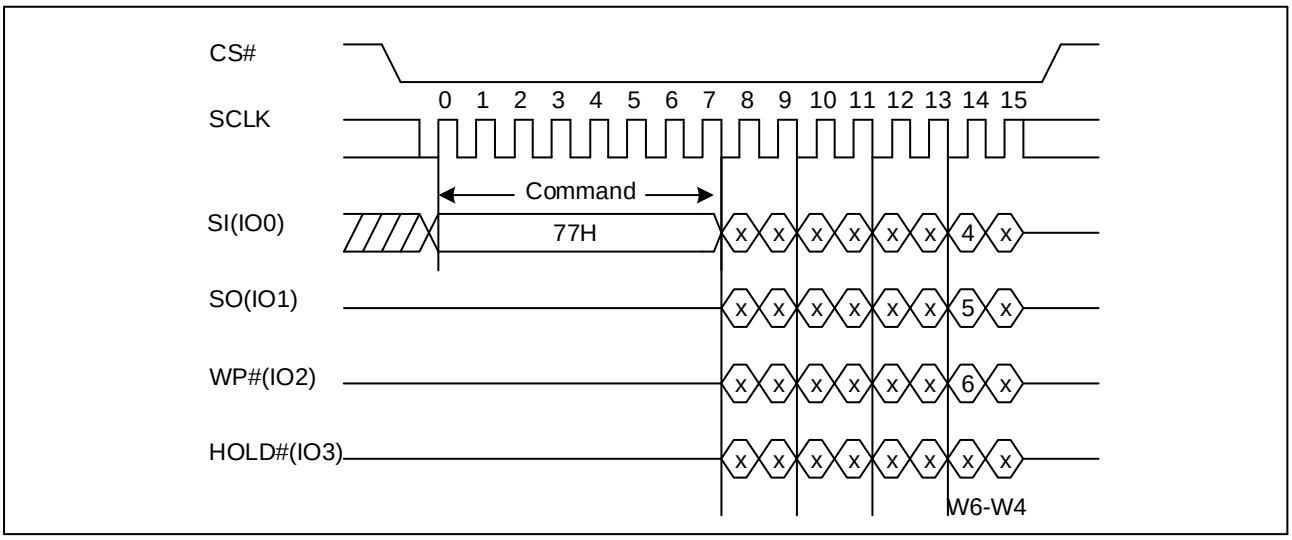

7.13 Page Program (PP) (02H)

The Page Program (PP) command is for programming the memory. A Write Enable (WREN) command must previously have been executed to set the Write Enable Latch (WEL) bit before sending the Page Program command.

The Page Program (PP) command is entered by driving CS# Low, followed by the command code, three address bytes and at least one data byte on SI. If the 8 least significant address bits (A7-A0) are not all zero, all transmitted data that goes beyond the end of the current page are programmed from the start address of the same page (from the address whose 8 least significant bits (A7-A0) are all zero). CS# must be driven low for the entire duration of the sequence. The Page Program command sequence: CS# goes low → sending Page Program command → 3-byte address on SI → at least 1 byte data on SI → CS# goes high. The command sequence is shown in Figure17. If more than 256 bytes are sent to the device, previously latched data are discarded and the last 256 data bytes are guaranteed to be programmed correctly within the same page. If less than 256 data bytes are sent to device, they are correctly programmed at the requested addresses without having any effects on the other bytes of the same page. CS# must be driven high after the eighth bit of the last data byte has been latched in; otherwise the Page Program (PP) command is not executed.

As soon as CS# is driven high, the self-timed Page Program cycle (whose duration is t_{PP}) is initiated. While the Page Program cycle is in progress, the Status Register may be read to check the value of the Write in Progress (WIP) bit. The Write in Progress (WIP) bit is 1 during the self-timed Page Program cycle, and is 0 when it is completed. At some unspecified time before the cycle is completed, the Write Enable Latch (WEL) bit is reset.

A Page Program (PP) command applied to a page which is protected by the Block Protect (BP4, BP3, BP2, BP1, and BP0) is not executed.

Figure17. Page Program Sequence Diagram

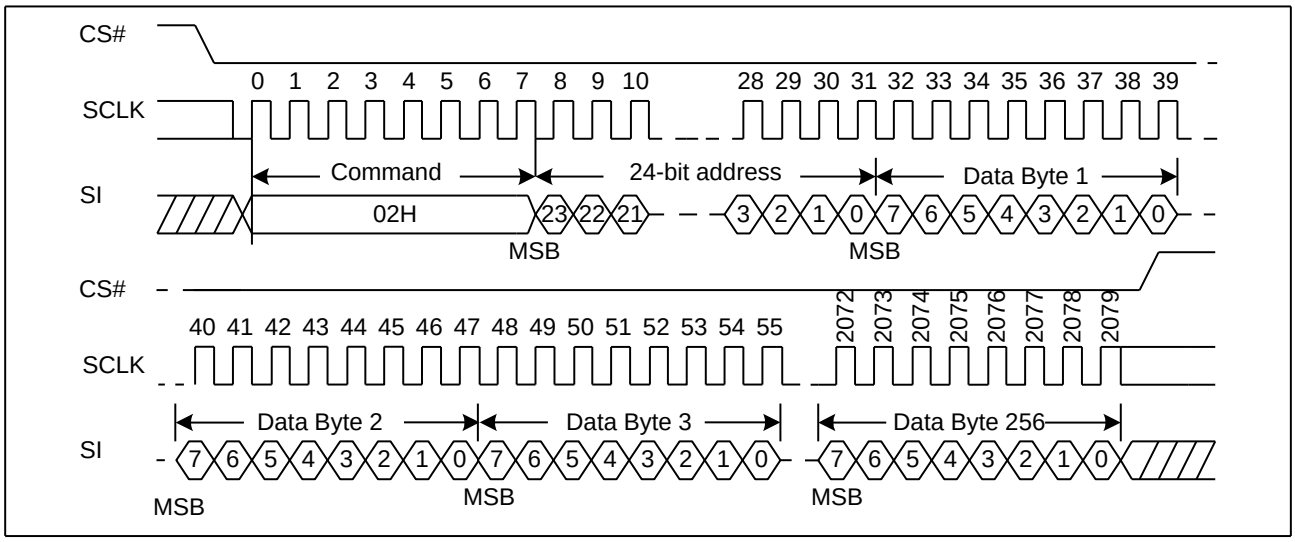

7.14 Quad Page Program (32H)

The Quad Page Program command is for programming the memory using four pins: IO0, IO1, IO2, and IO3. To use Quad Page Program the Quad enable in status register Bit9 must be set (QE=1). A Write Enable (WREN) command must previously have been executed to set the Write Enable Latch (WEL) bit before sending the Page Program command. The quad Page Program command is entered by driving CS# Low, followed by the command code (32H), three address bytes and at least one data byte on IO pins.

The command sequence is shown in Figure18. If more than 256 bytes are sent to the device, previously latched data are discarded and the last 256 data bytes are guaranteed to be programmed correctly within the same page. If less than 256 data bytes are sent to device, they are correctly programmed at the requested addresses without having any effects on the other bytes of the same page. CS# must be driven high after the eighth bit of the last data byte has been latched in; otherwise the Quad Page Program (PP) command is not executed.

As soon as CS# is driven high, the self-timed Quad Page Program cycle (whose duration is t_{PP}) is initiated. While the Quad Page Program cycle is in progress, the Status Register may be read to check the value of the Write In Progress (WIP) bit. The Write in Progress (WIP) bit is 1 during the self-timed Quad Page Program cycle, and is 0 when it is completed. At some unspecified time before the cycle is completed, the Write Enable Latch (WEL) bit is reset.

A Quad Page Program command applied to a page which is protected by the Block Protect (BP4, BP3, BP2, BP1, and BP0) is not executed.

Figure18.Quad Page Program Sequence Diagram

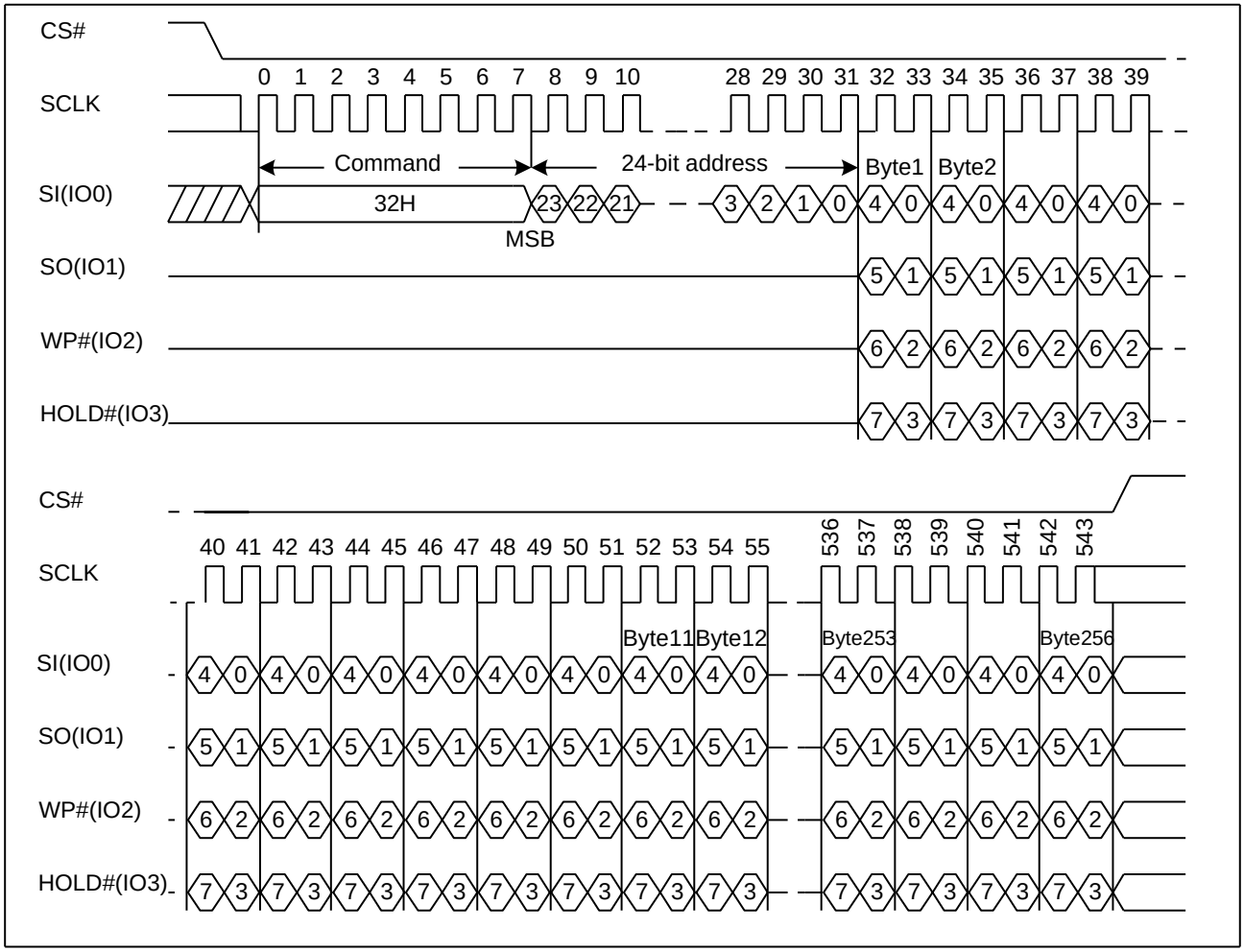

7.15 Sector Erase (SE) (20H)

The Sector Erase (SE) command is for erasing the all data of the chosen sector. A Write Enable (WREN) command must previously have been executed to set the Write Enable Latch (WEL) bit. The Sector Erase (SE) command is entered by driving CS# low, followed by the command code, and 3-address byte on SI. Any address inside the sector is a valid address for the Sector Erase (SE) command. CS# must be driven low for the entire duration of the sequence.

The Sector Erase command sequence: CS# goes low → sending Sector Erase command → 3-byte address on SI → CS# goes high. The command sequence is shown in Figure19. CS# must be driven high after the eighth bit of the last address byte has been latched in; otherwise the Sector Erase (SE) command is not executed. As soon as CS# is driven high, the self-timed Sector Erase cycle (whose duration is t_{SE}) is initiated. While the Sector Erase cycle is in progress, the Status Register may be read to check the value of the Write in Progress (WIP) bit. The Write in Progress (WIP) bit is 1 during the self-timed Sector Erase cycle, and is 0 when it is completed. At some unspecified time before the cycle is completed, the Write Enable Latch (WEL) bit is reset. A Sector Erase (SE) command applied to a sector which is protected by the Block Protect (BP4, BP3, BP2, BP1, and BP0) bit (see Table1&1a) is not executed.

Figure19. Sector Erase Sequence Diagram

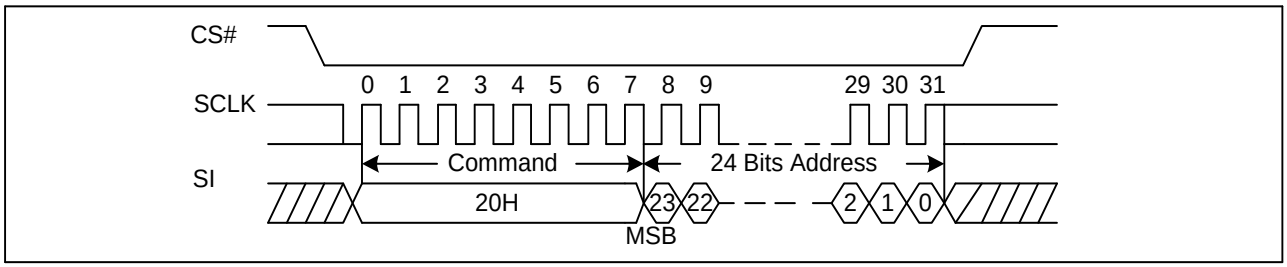

7.16 32KB Block Erase (BE) (52H)

The 32KB Block Erase (BE) command is for erasing the all data of the chosen block. A Write Enable (WREN) command must previously have been executed to set the Write Enable Latch (WEL) bit. The 32KB Block Erase (BE) command is entered by driving CS# low, followed by the command code, and three address bytes on SI. Any address inside the block is a valid address for the 32KB Block Erase (BE) command. CS# must be driven low for the entire duration of the sequence.

The 32KB Block Erase command sequence: CS# goes low → sending 32KB Block Erase command → 3-byte address on SI → CS# goes high. The command sequence is shown in Figure 20. CS# must be driven high after the eighth bit of the last address byte has been latched in; otherwise the 32KB Block Erase (BE) command is not executed. As soon as CS# is driven high, the self-timed Block Erase cycle (whose duration is t_{SE}) is initiated. While the Block Erase cycle is in progress, the Status Register may be read to check the value of the Write in Progress (WIP) bit. The Write in Progress (WIP) bit is 1 during the self-timed Block Erase cycle, and is 0 when it is completed. At some unspecified time before the cycle is completed, the Write Enable Latch (WEL) bit is reset. A 32KB Block Erase (BE) command applied to a block which is protected by the Block Protect (BP4, BP3, BP2, BP1, and BP0) bits (see Table1&1a) is not executed.

Figure 20. 32KB Block Erase Sequence Diagram

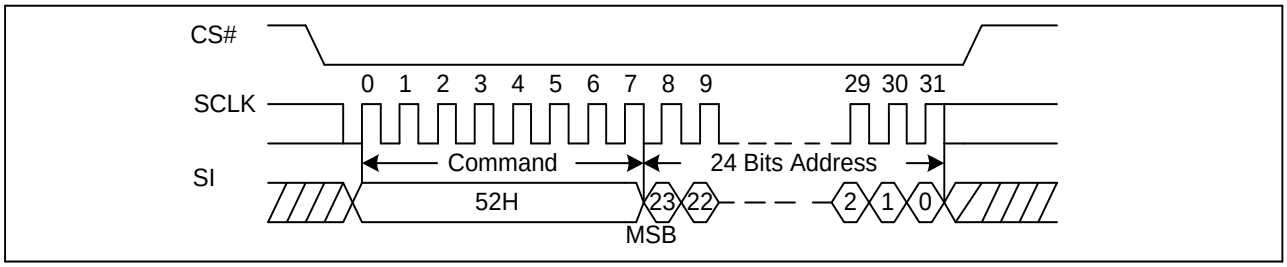

7.17 64KB Block Erase (BE) (D8H)

The 64KB Block Erase (BE) command is for erasing the all data of the chosen block. A Write Enable (WREN) command must previously have been executed to set the Write Enable Latch (WEL) bit. The 64KB Block Erase (BE) command is entered by driving CS# low, followed by the command code, and three address bytes on SI. Any address inside the block is a valid address for the 64KB Block Erase (BE) command. CS# must be driven low for the entire duration of the sequence. The 64KB Block Erase command sequence: CS# goes low → sending 64KB Block Erase command → 3-byte address on SI → CS# goes high. The command sequence is shown in Figure 21. CS# must be driven high after the eighth bit of the last address byte has been latched in; otherwise the 64KB Block Erase (BE) command is not executed. As soon as CS# is driven high, the self-timed Block Erase cycle (whose duration is t_{SE}) is initiated. While the Block Erase cycle is in progress, the Status Register may be read to check the value of the Write in Progress (WIP) bit. The Write in Progress (WIP) bit is 1 during the self-timed Block Erase cycle, and is 0 when it is completed. At some unspecified time before the cycle is completed, the Write Enable Latch (WEL) bit is reset. A 64KB Block Erase (BE) command applied to a block which is protected by the Block Protect (BP4, BP3, BP2, BP1, and BP0) bits (see Table1&1a) is not executed.

Figure21. 64KB Block Erase Sequence Diagram

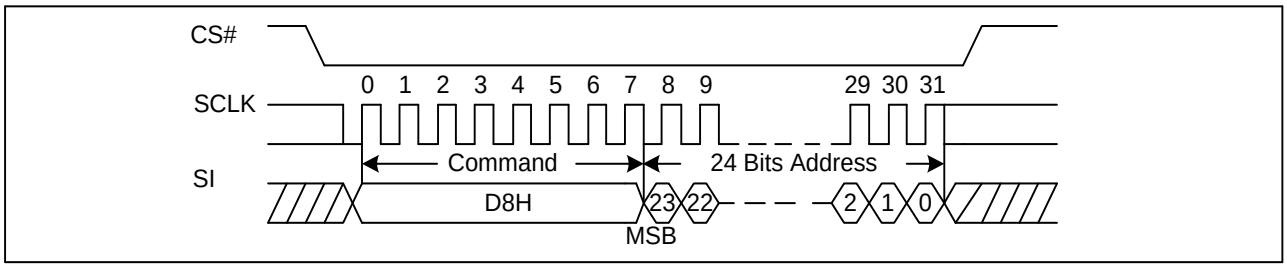

7.18 Chip Erase (CE) (60/C7H)

The Chip Erase (CE) command is for erasing the all data of the chip. A Write Enable (WREN) command must previously have been executed to set the Write Enable Latch (WEL) bit .The Chip Erase (CE) command is entered by driving CS# Low, followed by the command code on Serial Data Input (SI). CS# must be driven Low for the entire duration of the sequence. The Chip Erase command sequence: CS# goes low → sending Chip Erase command → CS# goes high. The command sequence is shown in Figure 22. CS# must be driven high after the eighth bit of the command code has been latched in; otherwise the Chip Erase command is not executed. As soon as CS# is driven high, the self-timed Chip Erase cycle (whose duration is t_{CE}) is initiated. While the Chip Erase cycle is in progress, the Status Register may be read to check the value of the Write in Progress (WIP) bit. The Write in Progress (WIP) bit is 1 during the self-timed Chip Erase cycle, and is 0 when it is completed. At some unspecified time before the cycle is completed, the Write Enable Latch (WEL) bit is reset. The Chip Erase (CE) command is executed, if the Block Protect (BP2, BP1, and BP0) bits are 0 and CMP=0 or the Block Protect (BP2, BP1, and BP0) bits are 1 and CMP=1.

Figure22. Chip Erase Sequence Diagram

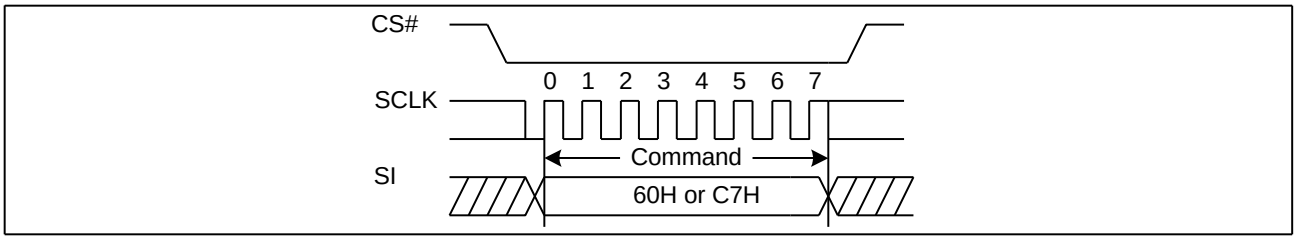

7.19 Enable/Disable SO to Output RY/BY# (ESRY/DSRY) (70H/80H)

Besides SO pin is used to output data, it also can be used as the status pin of ready/busy. The ESRY command is for outputting the ready/busy status to SO. When the device is in the process of power on, enter or exit deep power down mode and erase/program, its status is busy, and the SO output 0. When the device is in the standby mode, the status of device is ready, then SO output 1. The DSRY command is for resetting ESRY. The ready/busy status will not output to SO after DSRY issued.

The Enable/Disable SO to Output RY/BY# command sequence: CS# goes low → sending ESRY command code → CS# goes high. The command sequence is shown in Figure23. CS# must be driven high after the eighth bit of the command code has been latched in; otherwise the Enable/Disable SO to Output RY/BY# command is not executed.

Figure23. Enable/Disable SO to Output RY/BY# Diagram

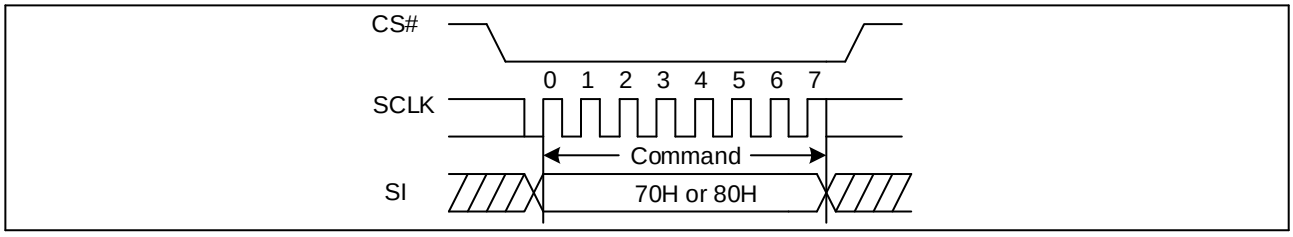

7.20 Deep Power-Down (DP) (B9H)

Executing the Deep Power-Down (DP) command is the only way to put the device in the lowest consumption mode (the Deep Power-Down Mode). It can also be used as an extra software protection mechanism, while the device is not in active use, since in this mode, the device ignores all Write, Program and Erase commands. Driving CS# high deselects the device, and puts the device in the Standby Mode (if there is no internal cycle currently in progress). But this mode is not the Deep Power-Down Mode. The Deep Power-Down Mode can only be entered by executing the Deep Power-Down (DP) command. Once the device has entered the Deep Power-Down Mode, all commands are ignored except the Release from Deep Power-Down and Read Device ID (RDI) command or software reset command. The Release from Deep Power-Down and Read Device ID (RDI) command releases the device from Deep Power-Down mode, also allows the Device ID of the device to be output on SO.

The Deep Power-Down Mode automatically stops at Power-Down, and the device always in the Standby Mode after Power-Up.

The Deep Power-Down command sequence: CS# goes low → sending Deep Power-Down command → CS# goes high. The command sequence is shown in Figure24. CS# must be driven high after the eighth bit of the command code has been latched in; otherwise the Deep Power-Down (DP) command is not executed. As soon as CS# is driven high, it requires a delay of t_{DP} before the supply current is reduced to I_{CC2} and the Deep Power-Down Mode is entered. Any Deep Power-Down (DP) command, while an Erase, Program or Write cycle is in progress, is rejected without having any effects on the cycle that is in progress.

Figure24. Deep Power-Down Sequence Diagram

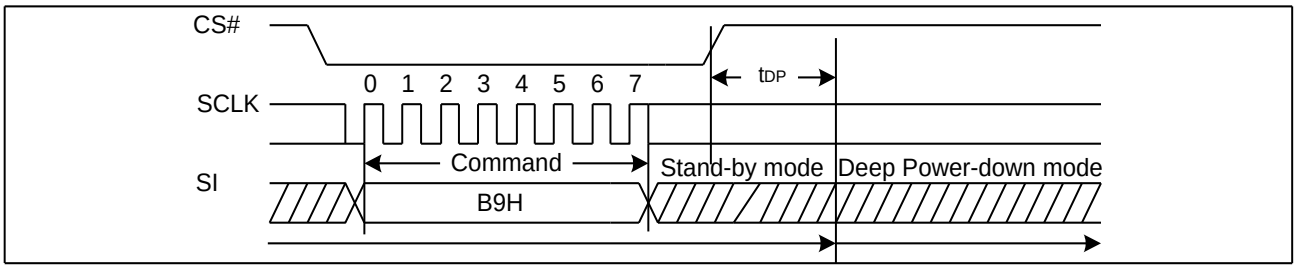

7.21 Release from Deep Power-Down and Read Device ID (RDI) (ABH)

The Release from Power-Down and Read Device ID command is a multi-purpose command. It can be used to release the device from the Power-Down state or obtain the devices electronic identification (ID) number.

To release the device from the Power-Down state, the command is issued by driving the CS# pin low, shifting the instruction code "ABH" and driving CS# high as shown in Figure25. Release from Power-Down will take the time duration of t_{RES1} (See AC Characteristics) before the device will resume normal operation and other command are accepted. The CS# pin must remain high during the t_{RES1} time duration.

When used only to obtain the Device ID while not in the Power-Down state, the command is initiated by driving the CS# pin low and shifting the instruction code "ABH" followed by 3-dummy byte. The Device ID bits are then shifted out on the falling edge of SCLK with most significant bit (MSB) first as shown in Figure26. The Device ID value is listed in Manufacturer and Device Identification table. The Device ID can be read continuously. The command is completed by driving CS# high.

When used to release the device from the Power-Down state and obtain the Device ID, the command is the same as previously described, and shown in Figure26, except that after CS# is driven high it must remain high for a time duration of t_{RES2} (See AC Characteristics). After this time duration the device will resume normal operation and other command will be accepted. If the Release from Power-Down / Device ID command is issued while an Erase, Program or Write cycle is in process (when WIP equal 1) the command is ignored and will not have any effects on the current cycle.

Figure25. Release Power-Down Sequence Diagram

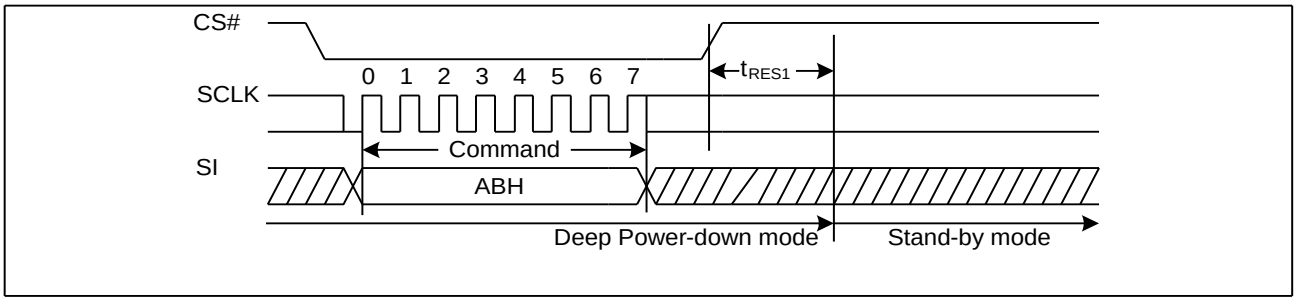

Figure26. Release Power-Down/Read Device ID Sequence Diagram

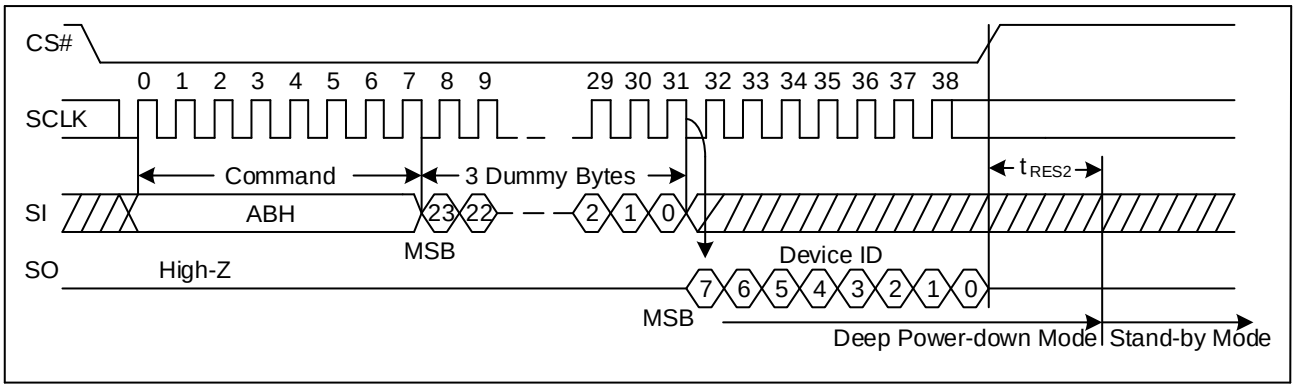

7.22 Read Manufacture ID/ Device ID (REMS) (90H)

The Read Manufacturer/Device ID command is an alternative to the Release from Power-Down / Device ID command that provides both the JEDEC assigned Manufacturer ID and the specific Device ID.

The command is initiated by driving the CS# pin low and shifting the command code “90H” followed by a 24-bit address (A23-A0) of 000000H. After which, the Manufacturer ID and the Device ID are shifted out on the falling edge of SCLK with most significant bit (MSB) first as shown in Figure27. If the 24-bit address is initially set to 000001H, the Device ID will be read first.

Figure27. Read Manufacture ID/ Device ID Sequence Diagram

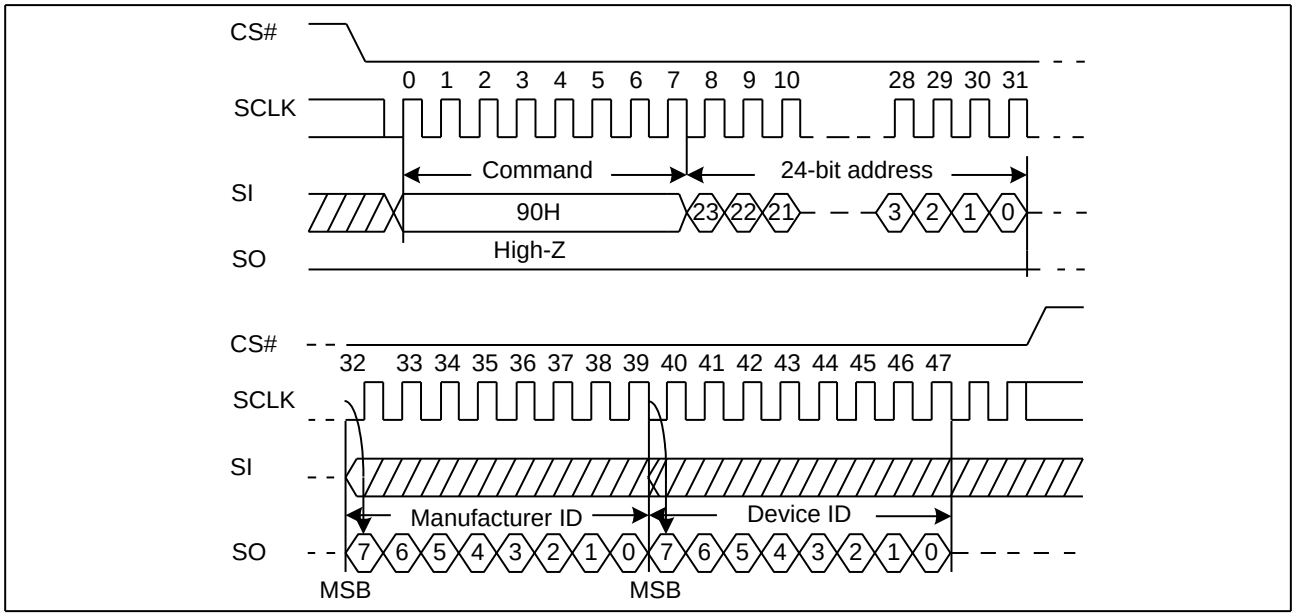

7.23 Read Manufacture ID/ Device ID Dual I/O (92H)

The Read Manufacturer/Device ID Dual I/O command is an alternative to the Release from Power-Down / Device ID command that provides both the JEDEC assigned Manufacturer ID and the specific Device ID by dual I/O.

The command is initiated by driving the CS# pin low and shifting the command code “92H” followed by a 24-bit address (A23-A0) of 000000H. After which, the Manufacturer ID and the Device ID are shifted out on the falling edge of SCLK with most significant bit (MSB) first as shown in Figure28. If the 24-bit address is initially set to 000001H, the Device ID will be read first.

Figure28. Read Manufacture ID/ Device ID Dual I/O Sequence Diagram

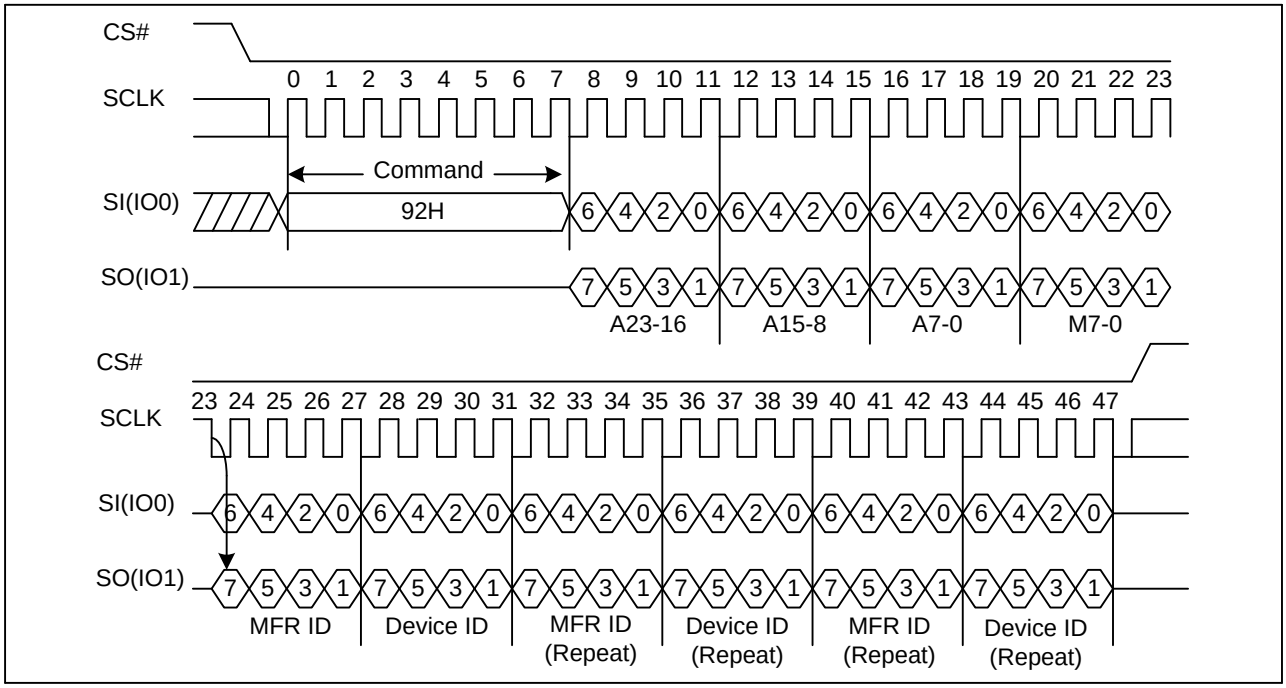

7.24 Read Manufacture ID/ Device ID Quad I/O (94H)

The Read Manufacturer/Device ID Quad I/O command is an alternative to the Release from Power-Down / Device ID command that provides both the JEDEC assigned Manufacturer ID and the specific Device ID by quad I/O.

The command is initiated by driving the CS# pin low and shifting the command code “94H” followed by a 24-bit address (A23-A0) of 000000H. After which, the Manufacturer ID and the Device ID are shifted out on the falling edge of SCLK with most significant bit (MSB) first as shown in Figure29. If the 24-bit address is initially set to 000001H, the Device ID will be read first.

Figure29. Read Manufacture ID/ Device ID Quad I/O Sequence Diagram

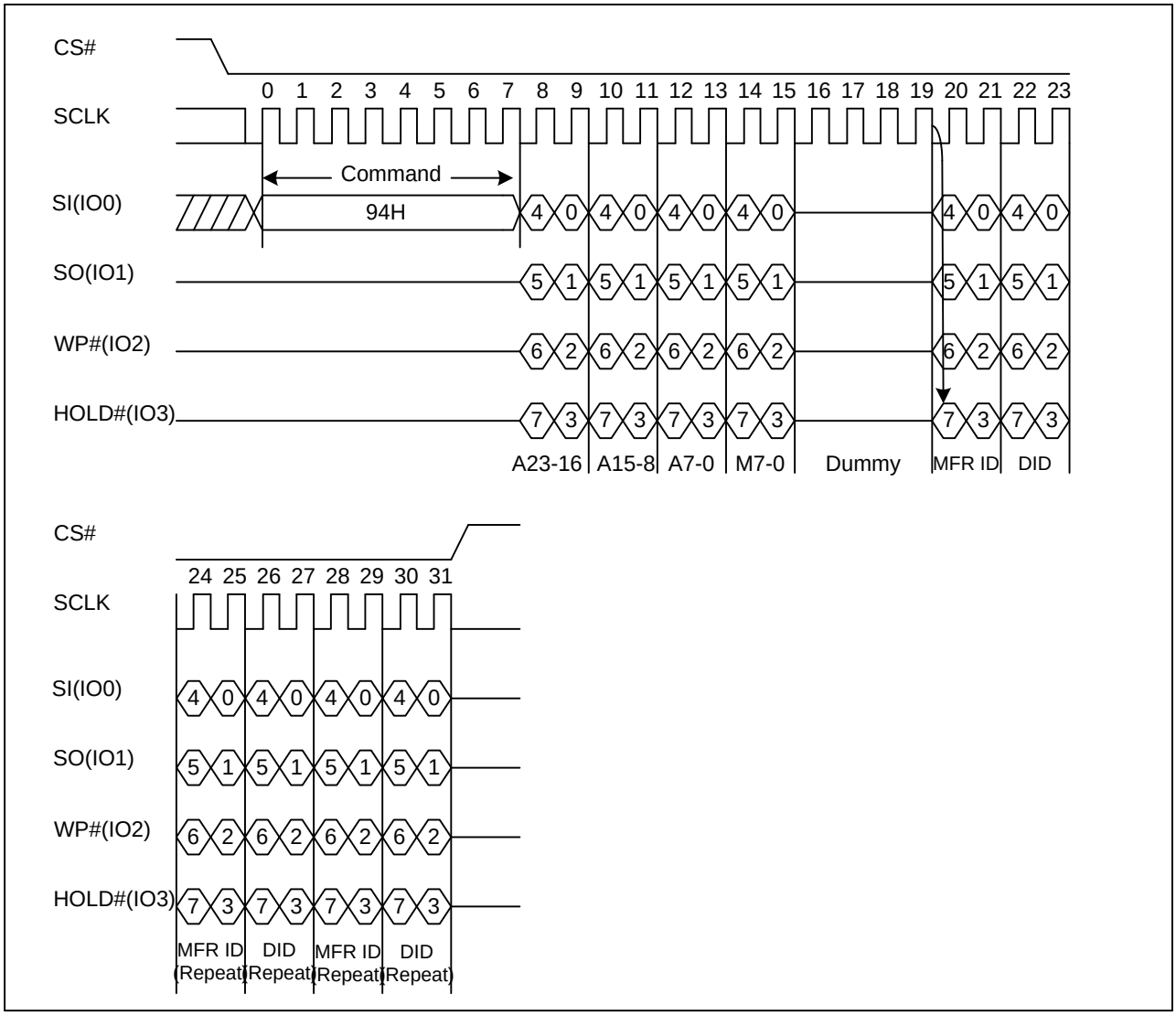

7.25 Read Identification (RDID) (9FH)

The Read Identification (RDID) command allows the 8-bit manufacturer identification to be read, followed by two bytes of device identification. The device identification indicates the memory type in the first byte, and the memory capacity of the device in the second byte. The Read Identification (RDID) command while an Erase or Program cycle is in progress, is not decoded, and has no effect on the cycle that is in progress. The Read Identification (RDID) command should not be issued while the device is in Deep Power-Down Mode.

The device is first selected by driving CS# low. Then, the 8-bit command code for the command is shifted in. This is followed by the 24-bit device identification, stored in the memory. Each bit is shifted out on the falling edge of Serial Clock. The command sequence is shown in Figure 30. The Read Identification (RDID) command is terminated by driving CS# high at any time during data output. When CS# is driven high, the device is in the Standby Mode. Once in the Standby Mode, the device waits to be selected, so that it can receive, decode and execute commands.

Figure30. Read Identification ID Sequence Diagram

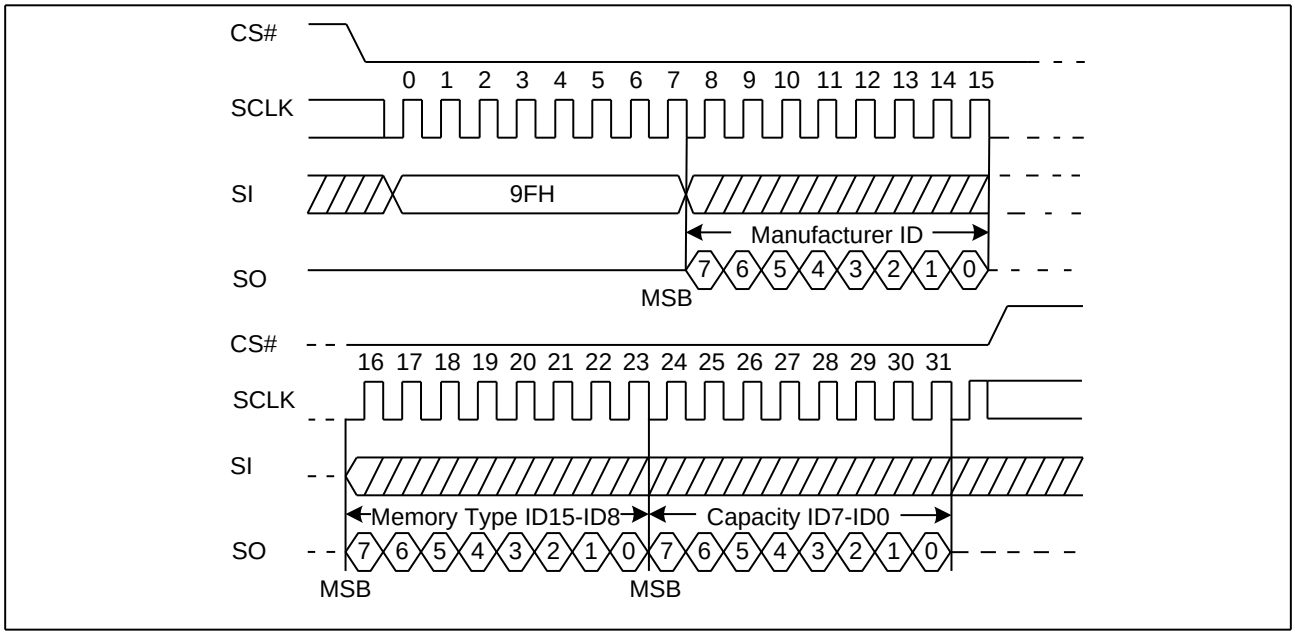

7.26 Program/Erase Suspend (PES) (75H)

The Program/Erase Suspend command "75H", allows the system to interrupt a page program or sector/block erase operation and then read data from any other sector or block. The Write Status Register command (01H) and Erase/Program Security Registers command (44H,42H) and Erase commands (20H, 52H, D8H, C7H, 60H) and Page Program command (02H/32H) are not allowed during Program suspend. The Write Status Register command (01H) and Erase Security Registers command (44H) and Erase commands (20H, 52H, D8H, C7H, 60H) are not allowed during Erase suspend. Program/Erase Suspend is valid only during the page program or sector/block erase operation. A maximum of time of "tsus" (See AC Characteristics) is required to suspend the program/erase operation.

The Program/Erase Suspend command will be accepted by the device only if the SUS2/SUS1 bit in the Status Register equal to 0 and WIP bit equal to 1 while a Page Program or a Sector or Block Erase operation is on-going. If the SUS2/SUS1 bit equal to 1 or WIP bit equal to 0, the Suspend command will be ignored by the device. The WIP bit will be cleared form 1 to 0 within "tsus" and the SUS2/SUS1 bit will be set from 0 to 1 immediately after Program/Erase Suspend. A power-off during the suspend period will reset the device and release the suspend state. The command sequence is show in Figure31.

Figure31. Program/Erase Suspend Sequence Diagram

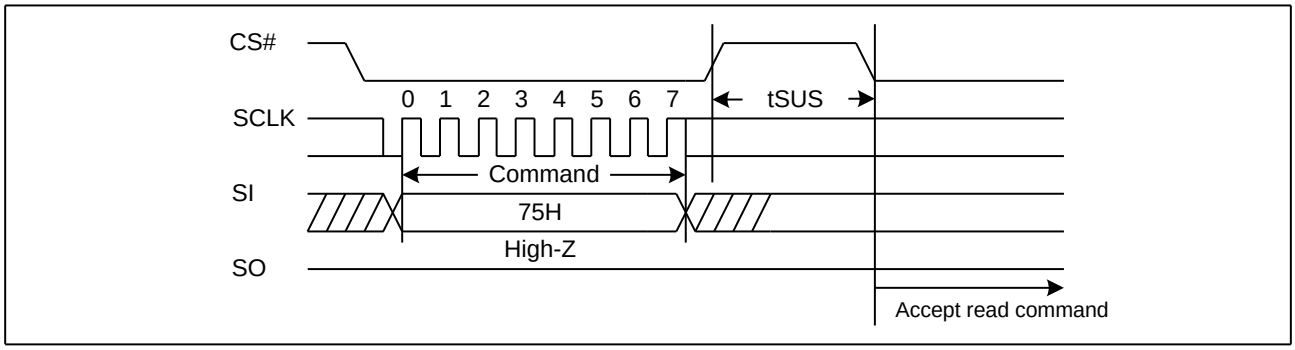

7.27 Program/Erase Resume (PER) (7AH)

The Program/Erase Resume command must be written to resume the program or sector/block erase operation after a Program/Erase Suspend command. The Program/Erase Resume command will be accepted by the device only if the SUS2/SUS1 bit equal to 1 and the WIP bit equal to 0. After issued the SUS2/SUS1 bit in the status register will be cleared from 1 to 0 immediately, the WIP bit will be set from 0 to 1 within 200ns and the Sector or Block will complete the erase operation or the page will complete the program operation. The Program/Erase Resume command will be ignored unless a Program/Erase Suspend is active. The command sequence is show in Figure32.

Figure32. Program/Erase Resume Sequence Diagram

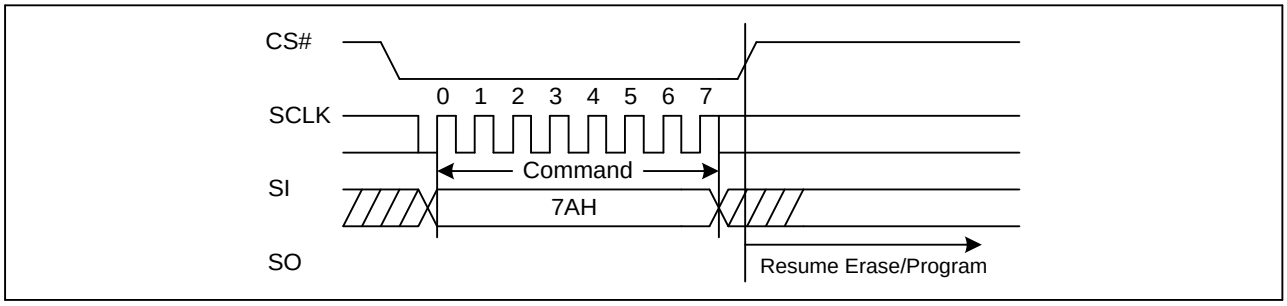

7.28 Read Unique ID (4BH)

The Read Unique ID command accesses a factory-set read-only 128bit number that is unique to each device. The Unique ID can be used in conjunction with user software methods to help prevent copying or cloning of a system.

The Read Unique ID command sequence: CS# goes low → sending Read Unique ID command → 3-Byte Address (000000H) →Dummy Byte→128bit Unique ID Out →CS# goes high.

Figure33. Read Unique ID Sequence Diagram

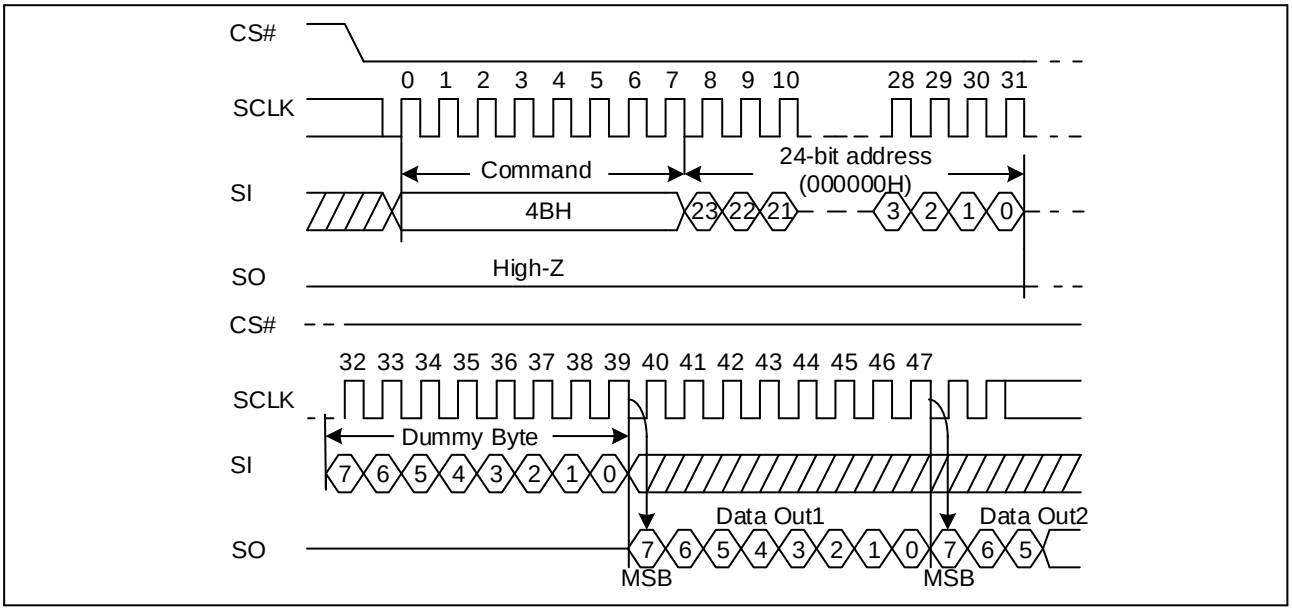

7.29 Erase Security Registers (44H)

The GD25LQ16C provides three 512-byte Security Registers which can be erased and programmed individually. These registers may be used by the system manufacturers to store security and other important information separately from the main memory array.

The Erase Security Registers command is similar to Sector/Block Erase command. A Write Enable (WREN) command must previously have been executed to set the Write Enable Latch (WEL) bit.

The Erase Security Registers command sequence: CS# goes low → sending Erase Security Registers command → The Erase Security Registers command sequence: CS# goes low → sending Erase Security Registers command → 3-byte address on SI → CS# goes high. The command sequence is shown below. CS# must be driven high after the eighth bit of the last address byte has been latched in; otherwise the Erase Security Registers command is not executed. As soon as CS# is driven high, the self-timed Erase Security Registers cycle (whose duration is t_{SE}) is initiated. While the Erase Security Registers cycle is in progress, the Status Register may be read to check the value of the Write in Progress (WIP) bit. The Write in Progress (WIP) bit is 1 during the self-timed Erase Security Registers cycle, and is 0 when it is completed. At some unspecified time before the cycle is completed, the Write Enable Latch (WEL) bit is reset. The Security Registers Lock Bit (LB3-1) in the Status Register can be used to OTP protect the security registers. Once the LB bit is set to 1, the Security Registers will be permanently locked; the Erase Security Registers command will be ignored.

Address	A23-16	A15-12	A11-9	A8-0
Security Register #1	00H	0 0 0 1	0 0 0	Don‘t care
Security Register #2	00H	0 0 1 0	0 0 0	Don‘t care
Security Register #3	00H	0 0 1 1	0 0 0	Don‘t care

Figure34. Erase Security Registers command Sequence Diagram

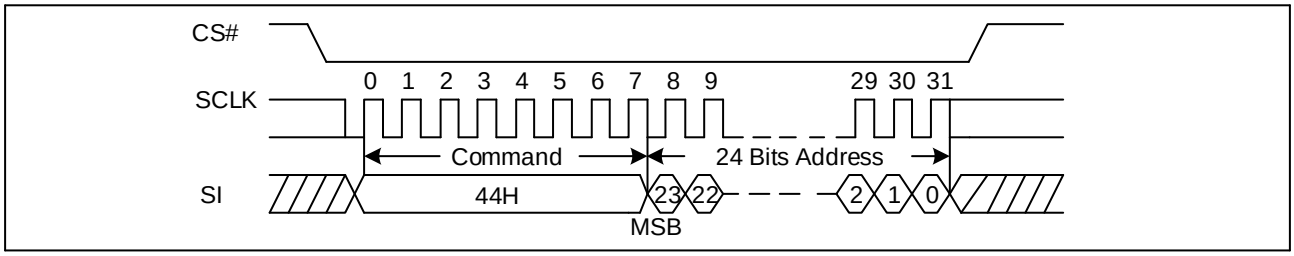

7.30 Program Security Registers (42H)

The Program Security Registers command is similar to the Page Program command. Each security register contains four pages content. A Write Enable (WREN) command must previously have been executed to set the Write Enable Latch (WEL) bit before sending the Program Security Registers command. The Program Security Registers command is entered by driving CS# Low, followed by the command code (42H), three address bytes and at least one data byte on SI. As soon as CS# is driven high, the self-timed Program Security Registers cycle (whose duration is t_{PP}) is initiated. While the Program Security Registers cycle is in progress, the Status Register may be read to check the value of the Write in Progress (WIP) bit. The Write in Progress (WIP) bit is 1 during the self-timed Program Security Registers cycle, and is 0 when it is completed. At some unspecified time before the cycle is completed, the Write Enable Latch (WEL) bit is reset.

If the Security Registers Lock Bit (LB3-1) is set to 1, the Security Registers will be permanently locked. Program Security Registers command will be ignored.

Address	A23-16	A15-12	A11-9	A8-0
Security Register #1	00H	0 0 0 1	0 0 0	Byte Address
Security Register #2	00H	0 0 1 0	0 0 0	Byte Address
Security Register #3	00H	0 0 1 1	0 0 0	Byte Address

Figure35. Program Security Registers command Sequence Diagram

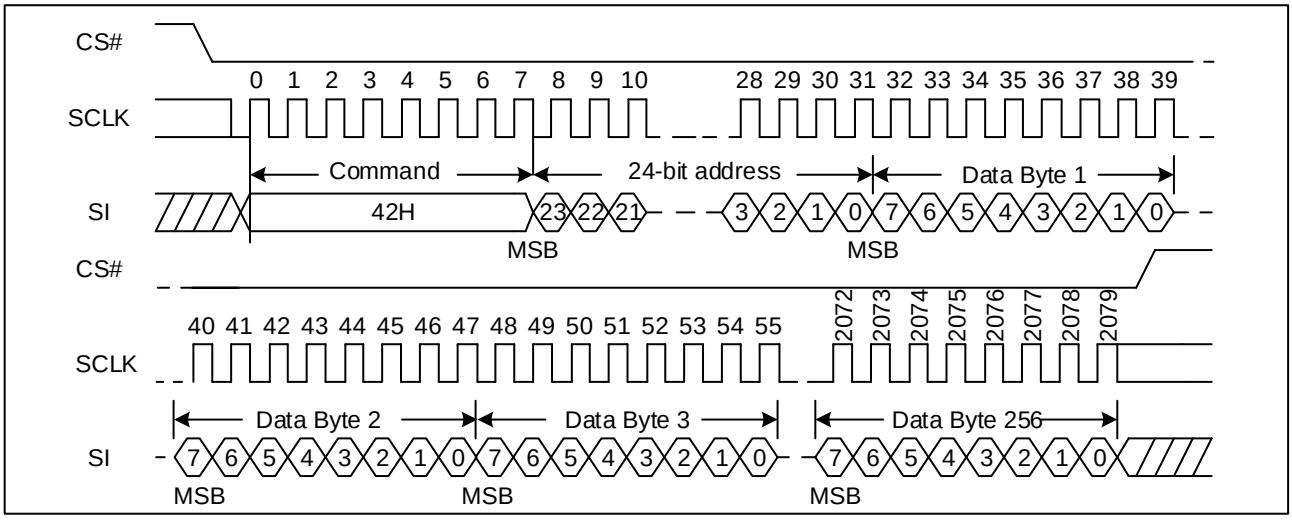

7.31 Read Security Registers (48H)

The Read Security Registers command is similar to Fast Read command. The command is followed by a 3-byte address (A23-A0) and a dummy byte, and each bit is latched-in on the rising edge of SCLK. Then the memory content, at that address, is shifted out on SO, and each bit is shifted out, at a Max frequency f_C, on the falling edge of SCLK. The first byte addressed can be at any location. The address is automatically incremented to the next higher address after each byte of data is shifted out. Once the A8-A0 address reaches the last byte of the register (Byte 1FFH), it will reset to 000H, the command is completed by driving CS# high.

Address	A23-16	A15-12	A11-9	A8-0
Security Register #1	00H	0 0 0 1	0 0 0	Byte Address
Security Register #2	00H	0 0 1 0	0 0 0	Byte Address
Security Register #3	00H	0 0 1 1	0 0 0	Byte Address

Figure36. Read Security Registers command Sequence Diagram

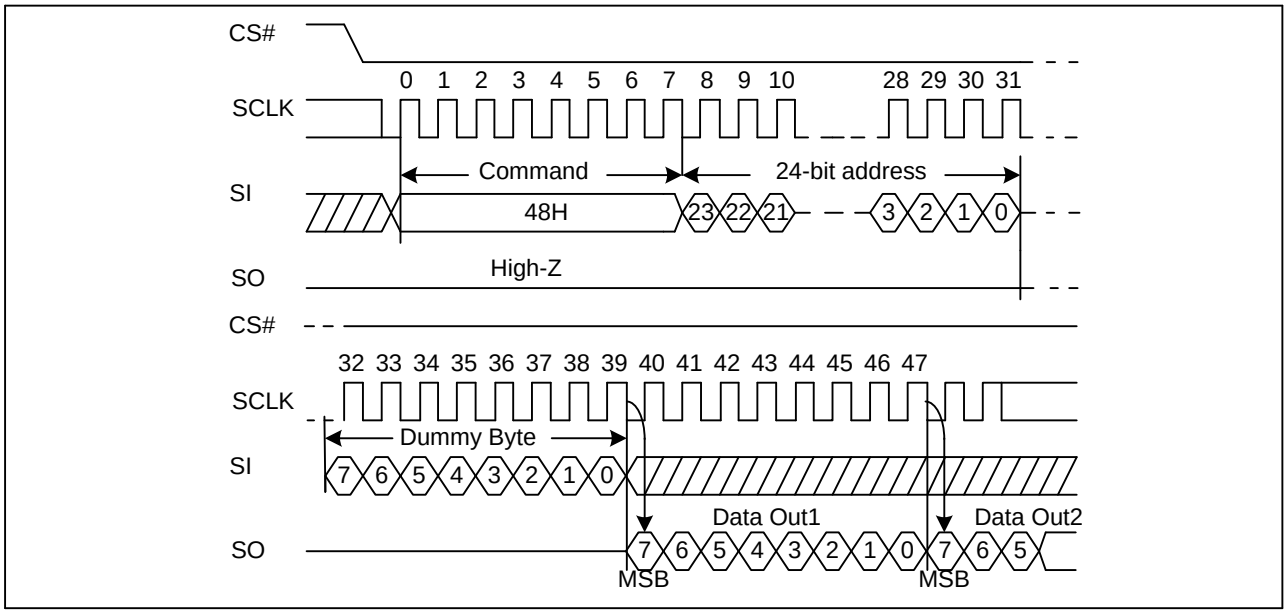

7.32 Enable Reset (66H) and Reset (99H)

If the Reset command is accepted, any on-going internal operation will be terminated and the device will return to its default power-on state and lose all the current volatile settings, such as Volatile Status Register bits, Write Enable Latch status (WEL), Program/Erase Suspend status, Read Parameter setting (P7-P0), Deep Power Down Mode, Continuous Read Mode bit setting (M7-M0) and Wrap Bit Setting (W6-W4).

The "Enable Reset (66H)" and the "Reset (99H)" commands can be issued in either SPI mode. The "Reset (99H)" command sequence as follow: CS# goes low → Sending Enable Reset command → CS# goes high → CS# goes low → Sending Reset command → CS# goes high. Once the Reset command is accepted by the device, the device will take approximately t_{RST} / t_{RST_E} to reset. During this period, no command will be accepted. Data corruption may happen if there is an on-going or suspended internal Erase or Program operation when Reset command sequence is accepted by the device. It is recommended to check the BUSY bit and the SUS bit in Status Register before issuing the Reset command sequence.

Figure37. Enable Reset and Reset command Sequence Diagram

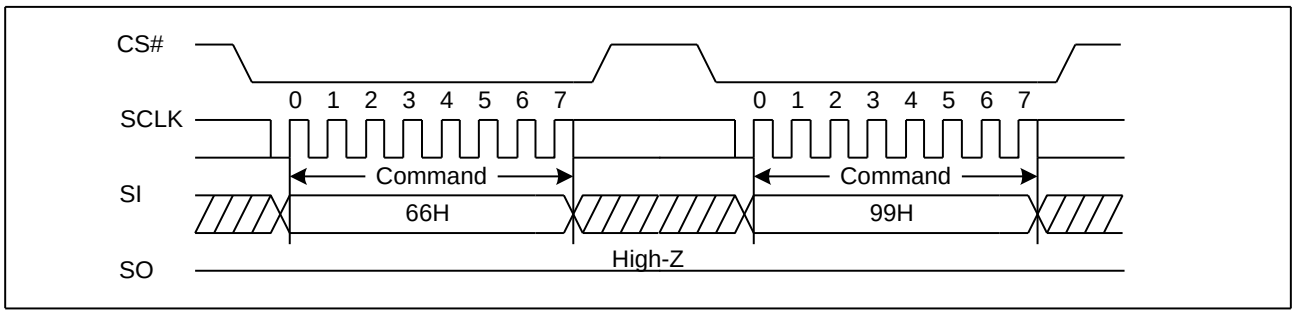

7.33 Read Serial Flash Discoverable Parameter (5AH)

The Serial Flash Discoverable Parameter (SFDP) standard provides a consistent method of describing the functional and feature capabilities of serial flash devices in a standard set of internal parameter tables. These parameter tables can be interrogated by host system software to enable adjustments needed to accommodate divergent features from multiple vendors. The concept is similar to the one found in the Introduction of JEDEC Standard, JESD68 on CFI. SFDP is a standard of JEDEC Standard No.216.

Figure38. Read Serial Flash Discoverable Parameter command Sequence Diagram

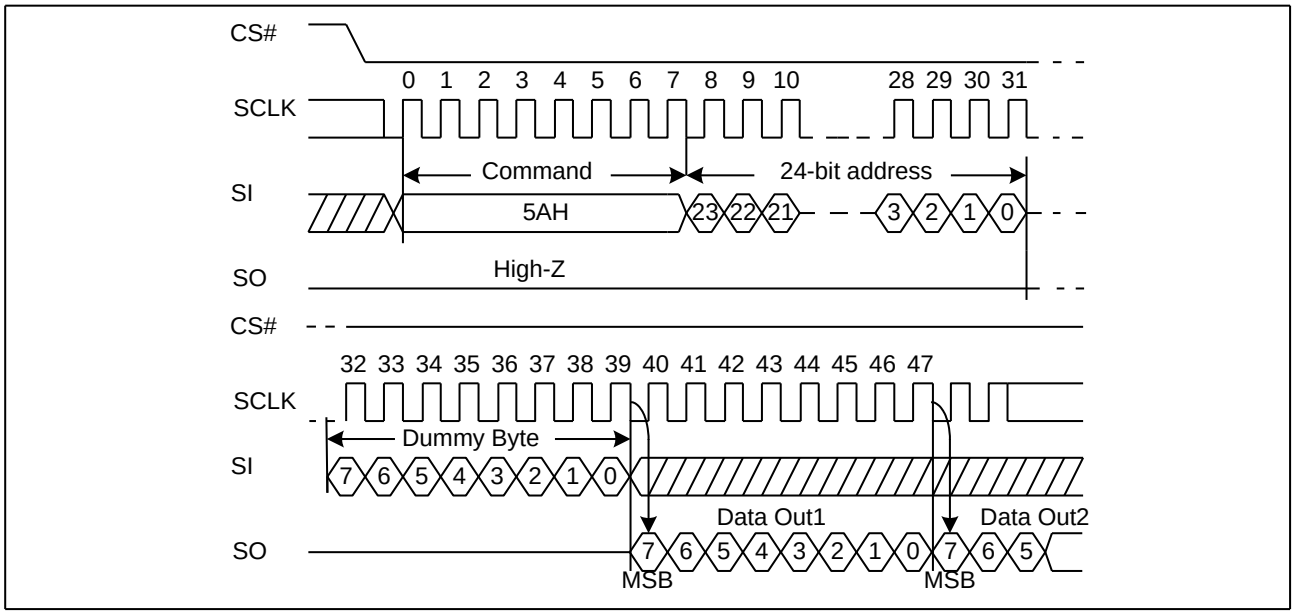

Table3. Signature and Parameter Identification Data Values

Description	Comment	Add(H) (Byte)	DW Add (Bit)	Data	Data
SFDP Signature	Fixed:50444653H	00H	07:00	53H	53H
		01H	15:08	46H	46H
		02H	23:16	44H	44H
		03H	31:24	50H	50H
SFDP Minor Revision Number	Start from 00H	04H	07:00	00H	00H
SFDP Major Revision Number	Start from 01H	05H	15:08	01H	01H
Number of Parameters Headers	Start from 00H	06H	23:16	01H	01H
Unused	Contains 0xFFH and can never be changed	07H	31:24	FFH	FFH
ID number (JEDEC)	00H: It indicates a JEDEC specified header	08H	07:00	00H	00H
Parameter Table Minor Revision Number	Start from 0x00H	09H	15:08	00H	00H
Parameter Table Major Revision Number	Start from 0x01H	0AH	23:16	01H	01H
Parameter Table Length (in double word)	How many DWORDs in the Parameter table	0BH	31:24	09H	09H
Parameter Table Pointer (PTP)	First address of JEDEC Flash Parameter table	0CH	07:00	30H	30H
		0DH	15:08	00H	00H
		0EH	23:16	00H	00H
Unused	Contains 0xFFH and can never be changed	0FH	31:24	FFH	FFH
ID Number LSB (GigaDevice Manufacturer ID)	It is indicates GigaDevice manufacturer ID	10H	07:00	C8H	C8H
Parameter Table Minor Revision Number	Start from 0x00H	11H	15:08	00H	00H
Parameter Table Major Revision Number	Start from 0x01H	12H	23:16	01H	01H
Parameter Table Length (in double word)	How many DWORDs in the Parameter table	13H	31:24	03H	03H
Parameter Table Pointer (PTP)	First address of GigaDevice Flash Parameter table	14H	07:00	60H	60H
		15H	15:08	00H	00H
		16H	23:16	00H	00H
Unused	Contains 0xFFH and can never be changed	17H	31:24	FFH	FFH

Table4. Parameter Table (0): JEDEC Flash Parameter Tables

Description	Comment	Add(H) (Byte)	DW Add (Bit)	Data	Data
Block/Sector Erase Size	00: Reserved; 01: 4KB erase; 10: Reserved; 11: not support 4KB erase	30H	01:00	01b	E5H
Write Granularity	0: 1Byte, 1: 64Byte or larger		02	1b	
Write Enable Instruction Requested for Writing to Volatile Status Registers	0: Nonvolatile status bit 1: Volatile status bit (BP status register bit)		03	0b	
Write Enable Opcode Select for Writing to Volatile Status Registers	0: Use 50H Opcode, 1: Use 06H Opcode, Note: If target flash status register is Nonvolatile, then bits 3 and 4 must be set to 00b.		04	0b	
Unused	Contains 111b and can never be changed		07:05	111b	
4KB Erase Opcode		31H	15:08	20H	20H
(1-1-2) Fast Read	0=Not support, 1=Support	32H	16	1b	F1H
Address Bytes Number used in addressing flash array	00: 3Byte only, 01: 3 or 4Byte, 10: 4Byte only, 11: Reserved		18:17	00b	
Double Transfer Rate (DTR) clocking	0=Not support, 1=Support		19	0b	
(1-2-2) Fast Read	0=Not support, 1=Support		20	1b	
(1-4-4) Fast Read	0=Not support, 1=Support		21	1b	
(1-1-4) Fast Read	0=Not support, 1=Support		22	1b	
Unused			23	1b	
Unused		33H	31:24	FFH	FFH
Flash Memory Density		37H:34H	31:00	00FFFFFFH	
(1-4-4) Fast Read Number of Wait states	0 0000b: Wait states (Dummy Clocks) not support	38H	04:00	00100b	44H
(1-4-4) Fast Read Number of Mode Bits	000b:Mode Bits not support		07:05	010b	
(1-4-4) Fast Read Opcode		39H	15:08	EBH	EBH
(1-1-4) Fast Read Number of Wait states	0 0000b: Wait states (Dummy Clocks) not support	3AH	20:16	01000b	08H
(1-1-4) Fast Read Number of Mode Bits	000b:Mode Bits not support		23:21	000b	
(1-1-4) Fast Read Opcode		3BH	31:24	6BH	6BH
(1-1-2) Fast Read Number of Wait states	0 0000b: Wait states (Dummy Clocks) not support	3CH	04:00	01000b	08H
(1-1-2) Fast Read Number	000b: Mode Bits not support		07:05	000b	

of Mode Bits					
(1-1-2) Fast Read Opcode		3DH	15:08	3BH	3BH
(1-2-2) Fast Read Number of Wait states	0 0000b: Wait states (Dummy Clocks) not support	3EH	20:16	00010b	42H
(1-2-2) Fast Read Number of Mode Bits	000b: Mode Bits not support		23:21	010b	
(1-2-2) Fast Read Opcode		3FH	31:24	BBH	BBH
(2-2-2) Fast Read	0=not support 1=support	40H	00	0b	EEH
Unused			03:01	111b	
(4-4-4) Fast Read	0=not support 1=support		04	0b	
Unused			07:05	111b	
Unused		43H:41H	31:08	0xFFH	0xFFH
Unused		45H:44H	15:00	0xFFH	0xFFH
(2-2-2) Fast Read Number of Wait states	0 0000b: Wait states (Dummy Clocks) not support	46H	20:16	00000b	00H
(2-2-2) Fast Read Number of Mode Bits	000b: Mode Bits not support		23:21	000b	
(2-2-2) Fast Read Opcode		47H	31:24	FFH	FFH
Unused		49H:48H	15:00	0xFFH	0xFFH
(4-4-4) Fast Read Number of Wait states	0 0000b: Wait states (Dummy Clocks) not support	4AH	20:16	00000b	00H
(4-4-4) Fast Read Number of Mode Bits	000b: Mode Bits not support		23:21	000b	
(4-4-4) Fast Read Opcode		4BH	31:24	FFH	FFH
Sector Type 1 Size	Sector/block size=2^N bytes 0x00b: this sector type don't exist	4CH	07:00	0CH	0CH
Sector Type 1 erase Opcode		4DH	15:08	20H	20H
Sector Type 2 Size	Sector/block size=2^N bytes 0x00b: this sector type don't exist	4EH	23:16	0FH	0FH
Sector Type 2 erase Opcode		4FH	31:24	52H	52H
Sector Type 3 Size	Sector/block size=2^N bytes 0x00b: this sector type don't exist	50H	07:00	10H	10H
Sector Type 3 erase Opcode		51H	15:08	D8H	D8H
Sector Type 4 Size	Sector/block size=2^N bytes 0x00b: this sector type don't exist	52H	23:16	00H	00H
Sector Type 4 erase Opcode		53H	31:24	FFH	FFH

Table5. Parameter Table (1): GigaDevice Flash Parameter Tables

Description	Comment	Add(H) (Byte)	DW Add (Bit)	Data	Data
Vcc Supply Maximum Voltage	2000H=2.000V 2100H=2.100V 2700H=2.700V 3600H=3.600V	61H:60H	15:00	2100H	2100H
Vcc Supply Minimum Voltage	1650H=1.650V 2250H=2.250V 2350H=2.350V 2700H=2.700V	63H:62H	31:16	1650H	1650H
HW Reset# pin	0=not support 1=support	65H:64H	00	0b	F99EH
HW Hold# pin	0=not support 1=support		01	1b	
Deep Power Down Mode	0=not support 1=support		02	1b	
SW Reset	0=not support 1=support		03	1b	
SW Reset Opcode	Should be issue Reset Enable(66H) before Reset cmd.		11:04	99H	
Program Suspend/Resume	0=not support 1=support		12	1b	
Erase Suspend/Resume	0=not support 1=support		13	1b	
Unused			14	1b	
Wrap-Around Read mode	0=not support 1=support		15	1b	
Wrap-Around Read mode Opcode		66H	23:16	77H	77H
Wrap-Around Read data length	08H:support 8B wrap-around read 16H:8B&16B 32H:8B&16B&32B 64H:8B&16B&32B&64B	67H	31:24	64H	64H
Individual block lock	0=not support 1=support	6BH:68H	00	0b	EBFCH
Individual block lock bit (Volatile/Nonvolatile)	0=Volatile 1=Nonvolatile		01	0b	
Individual block lock Opcode			09:02	FFH	
Individual block lock Volatile protect bit default protect status	0=protect 1=unprotect		10	0b	
Secured OTP	0=not support 1=support		11	1b	
Read Lock	0=not support 1=support		12	0b	
Permanent Lock	0=not support 1=support		13	1b	
Unused			15:14	11b	
Unused			31:16	FFFFH	FFFFH

8 ELECTRICAL CHARACTERISTICS

8.1 POWER-ON TIMING

Figure39. Power-On Timing Sequence Diagram

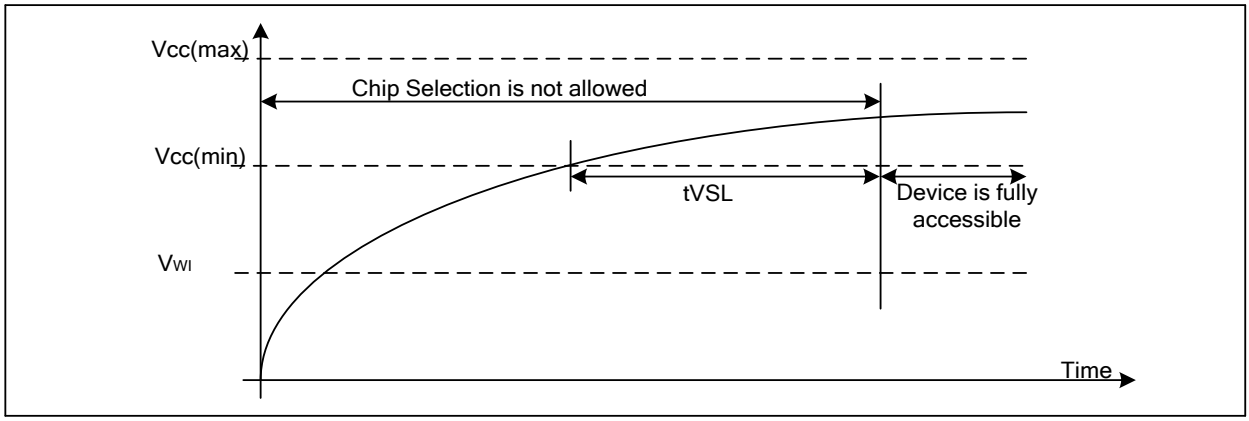

Table 8. Power-Up Timing and Write Inhibit Threshold

Symbol	Parameter	Min.	Max.	Unit
tVSL	VCC (min) To CS# Low	1.8		ms
VWI	Write Inhibit Voltage VCC (min)	1	1.4	V

8.2 Initial Delivery State

The device is delivered with the memory array erased: all bits are set to 1(each byte contains FFH).The Status Register contains 00H (all Status Register bits are 0).

8.3 Absolute Maximum Ratings

Parameter	Value	Unit
Ambient Operating Temperature	-40 to 85 -40 to 105 -40 to 125	℃
Storage Temperature	-65 to 150	℃
Transient Input/Output Voltage (**note:** overshoot)	-2.0 to VCC+2.0	V
Applied Input/Output Voltage	-0.6 to VCC+0.5	V
VCC	-0.6 to 2.5	V

Figure 40. Absolute Maximum Ratings Diagram

Maximum Negative Overshoot Waveform

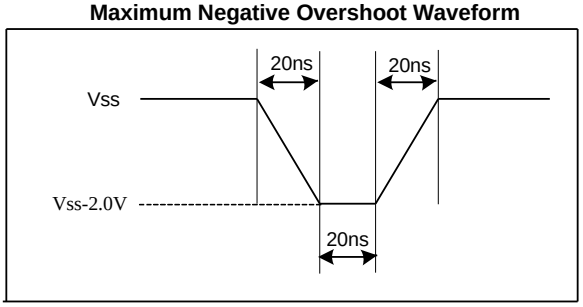

Maximum Positive Overshoot Waveform

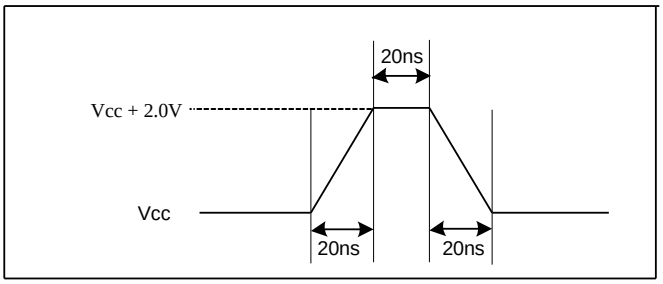

8.4 Capacitance Measurement Conditions

Symbol	Parameter	Min.	Typ.	Max.	Unit	Conditions
CIN	Input Capacitance			6	pF	VIN=0V
COUT	Output Capacitance			8	pF	VOUT=0V
C_L	Load Capacitance		30		pF	
	Input Rise And Fall time			5	ns	
	Input Pause Voltage	0.1VCC to 0.8VCC			V	
	Input Timing Reference Voltage	0.2VCC to 0.7VCC			V	
	Output Timing Reference Voltage	0.5VCC			V	

Figure41. Input Test Waveform and Measurement Level

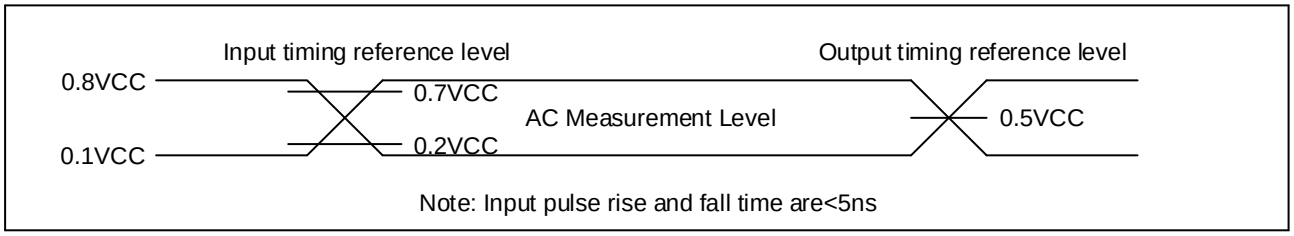

8.5 DC CHARACTERISTICS

(T= -40℃~85℃, VCC=1.65~2.1V)

Symbol	Parameter	Test Condition	Min.	Typ.	Max.	Unit.
I_{LI}	Input Leakage Current				±2	μA
I_{LO}	Output Leakage Current				±2	μA
I_{CC1}	Standby Current	CS#=VCC, V_{IN}=VCC or VSS		9	28	μA
I_{CC2}	Deep Power-Down Current	CS#=VCC, V_{IN}=VCC or VSS		1	8	μA
I_{CC3}	Operating Current (Read)	CLK=0.1VCC / 0.9VCC at 104MHz, Q=Open(*1,*2,*4 I/O)		10	13	mA
		CLK=0.1VCC / 0.9VCC at 80MHz, Q=Open(*1,*2,*4 I/O)		8	10	mA
I_{CC4}	Operating Current (PP)	CS#=VCC		15	20	mA
I_{CC5}	Operating Current (WRSR)	CS#=VCC		15	20	mA
I_{CC6}	Operating Current (SE)	CS#=VCC		15	20	mA
I_{CC7}	Operating Current (BE)	CS#=VCC		15	20	mA
I_{CC8}	Operating Current (CE)	CS#=VCC		15	20	mA
V_{IL}	Input Low Voltage				0.2VCC	V
V_{IH}	Input High Voltage		0.7VCC			V
V_{OL}	Output Low Voltage	I_{OL} =100μA			0.2	V
V_{OH}	Output High Voltage	I_{OH} =-100μA	VCC-0.2			V

Note:

1. Typical values given for TA=25°C, VCC = 1.8V.
2. Value guaranteed by design and/or characterization, not 100% tested in production.

(T= -40℃~105℃, VCC=1.65~2.1V)

Symbol	Parameter	Test Condition	Min.	Typ.	Max.	Unit.
I_{LI}	Input Leakage Current				±2	μA
I_{LO}	Output Leakage Current				±2	μA
I_{CC1}	Standby Current	CS#=VCC, V_{IN}=VCC or VSS		9	50	μA
I_{CC2}	Deep Power-Down Current	CS#=VCC, V_{IN}=VCC or VSS		1	15	μA
I_{CC3}	Operating Current (Read)	CLK=0.1VCC / 0.9VCC at 90MHz, Q=Open(*1,*2,*4 I/O)		10	20	mA
		CLK=0.1VCC / 0.9VCC at 80MHz, Q=Open(*1,*2,*4 I/O)		8	15	mA
I_{CC4}	Operating Current (PP)	CS#=VCC		15	30	mA
I_{CC5}	Operating Current (WRSR)	CS#=VCC		15	30	mA
I_{CC6}	Operating Current (SE)	CS#=VCC		15	30	mA
I_{CC7}	Operating Current (BE)	CS#=VCC		15	30	mA
I_{CC8}	Operating Current (CE)	CS#=VCC		15	30	mA
V_{IL}	Input Low Voltage				0.2VCC	V
V_{IH}	Input High Voltage		0.7VCC			V
V_{OL}	Output Low Voltage	I_{OL} =100μA			0.2	V
V_{OH}	Output High Voltage	I_{OH} =-100μA	VCC-0.2			V

Note:

1. Typical values given for TA=25°C, VCC = 1.8V.
2. Value guaranteed by design and/or characterization, not 100% tested in production.

(T= -40℃~125℃, VCC=1.65~2.1V)

Symbol	Parameter	Test Condition	Min.	Typ.	Max.	Unit.
I_{LI}	Input Leakage Current				±2	μA
I_{LO}	Output Leakage Current				±2	μA
I_{CC1}	Standby Current	CS#=VCC, V_{IN}=VCC or VSS		9	60	μA
I_{CC2}	Deep Power-Down Current	CS#=VCC, V_{IN}=VCC or VSS		1	20	μA
I_{CC3}	Operating Current (Read)	CLK=0.1VCC / 0.9VCC at 90MHz, Q=Open(*1,*2,*4 I/O)		10	20	mA
		CLK=0.1VCC / 0.9VCC at 80MHz, Q=Open(*1,*2,*4 I/O)		8	15	mA
I_{CC4}	Operating Current (PP)	CS#=VCC		15	30	mA
I_{CC5}	Operating Current (WRSR)	CS#=VCC		15	30	mA
I_{CC6}	Operating Current (SE)	CS#=VCC		15	30	mA
I_{CC7}	Operating Current (BE)	CS#=VCC		15	30	mA
I_{CC8}	Operating Current (CE)	CS#=VCC		15	30	mA
V_{IL}	Input Low Voltage				0.2VCC	V
V_{IH}	Input High Voltage		0.7VCC			V
V_{OL}	Output Low Voltage	I_{OL} =100μA			0.2	V
V_{OH}	Output High Voltage	I_{OH} =-100μA	VCC-0.2			V

Note:

1. Typical values given for TA=25°C, VCC = 1.8V.
2. Value guaranteed by design and/or characterization, not 100% tested in production.

8.6 AC CHARACTERISTICS

(T= -40℃~85℃, VCC=1.65~2.1V, C_L=30pf)

Symbol	Parameter	Min.	Typ.	Max.	Unit.
F_C	Serial Clock Frequency For: 0BH, 3BH, BBH, 6BH, EBH			104	MHz
f_R	Serial Clock Frequency For: Read (03H)			80	MHz
t_{CLH}	Serial Clock High Time	4			ns
t_{CLL}	Serial Clock Low Time	4			ns
t_{CLCH}	Serial Clock Rise Time (Slew Rate)	0.1			V/ns
t_{CHCL}	Serial Clock Fall Time (Slew Rate)	0.1			V/ns
t_{SLCH}	CS# Active Setup Time	5			ns
t_{CHSH}	CS# Active Hold Time	5			ns
t_{SHCH}	CS# Not Active Setup Time	5			ns
t_{CHSL}	CS# Not Active Hold Time	5			ns
t_{SHSL}	CS# High Time (Read/Write)	20			ns
t_{SHQZ}	Output Disable Time			6	ns
t_{CLQX}	Output Hold Time	1.2			ns
t_{DVCH}	Data In Setup Time	2			ns
t_{CHDX}	Data In Hold Time	2			ns
t_{HLCH}	HOLD# Low Setup Time (Relative To Clock)	5			ns
t_{HHCH}	HOLD# High Setup Time (Relative To Clock)	5			ns
t_{CHHL}	HOLD# High Hold Time (Relative To Clock)	5			ns
t_{CHHH}	HOLD# Low Hold Time (Relative To Clock)	5			ns
t_{HLQZ}	HOLD# Low To High-Z Output			6	ns
t_{HHQX}	HOLD# High To Low-Z Output			6	ns
t_{CLQV}	Clock Low To Output Valid (C_L = 30pF)			7	ns
	Clock Low To Output Valid (C_L = 15pF)			6	ns
t_{WHSL}	Write Protect Setup Time Before CS# Low	20			ns
t_{SHWL}	Write Protect Hold Time After CS# High	100			ns
t_{DP}	CS# High To Deep Power-Down Mode			3	μs
t_{RES1}	CS# High To Standby Mode Without Electronic Signature Read			20	μs
t_{RES2}	CS# High To Standby Mode With Electronic Signature Read			20	μs
t_{SUS}	CS# High To Next Command After Suspend			20	μs
t_{RS}	Latency Between Resume And Next Suspend	100			μs
t_{RST}	CS# High To Next Command After Reset (Except From Erase)			30	μs
t_{RST_E}	CS# High To Next Command After Reset (From Erase)			12	ms
t_W	Write Status Register Cycle Time		1	20	ms
t_{BP1}	Byte Program Time (First Byte)		25	50	μs
t_{BP2}	Addition Byte Program Time (After First Byte)		2.5	5	μs
t_{PP}	Page Programming Time		0.7	2.4	ms

t_{SE}	Sector Erase Time		40	300	ms
t_{BE1}	Block Erase Time (32K Bytes)		0.15	0.8	s
t_{BE2}	Block Erase Time (64K Bytes)		0.18	1	s
t_{CE}	Chip Erase Time (GD25LQ16C)		5	10	s

Note:

1. Typical values given for TA=25°C.
2. Value guaranteed by design and/or characterization, not 100% tested in production.

(T= -40℃~105℃, VCC=1.65~2.1V, C_L=30pf)

Symbol	Parameter	Min.	Typ.	Max.	Unit.
F_C	Serial Clock Frequency For: 0BH, 3BH, BBH, 6BH, EBH			90	MHz
f_R	Serial Clock Frequency For: Read (03H)			80	MHz
t_{CLH}	Serial Clock High Time	4			ns
t_{CLL}	Serial Clock Low Time	4			ns
t_{CLCH}	Serial Clock Rise Time (Slew Rate)	0.1			V/ns
t_{CHCL}	Serial Clock Fall Time (Slew Rate)	0.1			V/ns
t_{SLCH}	CS# Active Setup Time	5			ns
t_{CHSH}	CS# Active Hold Time	5			ns
t_{SHCH}	CS# Not Active Setup Time	5			ns
t_{CHSL}	CS# Not Active Hold Time	5			ns
t_{SHSL}	CS# High Time (Read/Write)	20			ns
t_{SHQZ}	Output Disable Time			6	ns
t_{CLQX}	Output Hold Time	1.2			ns
t_{DVCH}	Data In Setup Time	2			ns
t_{CHDX}	Data In Hold Time	2			ns
t_{HLCH}	HOLD# Low Setup Time (Relative To Clock)	5			ns
t_{HHCH}	HOLD# High Setup Time (Relative To Clock)	5			ns
t_{CHHL}	HOLD# High Hold Time (Relative To Clock)	5			ns
t_{CHHH}	HOLD# Low Hold Time (Relative To Clock)	5			ns
t_{HLQZ}	HOLD# Low To High-Z Output			6	ns
t_{HHQX}	HOLD# High To Low-Z Output			6	ns
t_{CLQV}	Clock Low To Output Valid (C_L = 30pF)			7	ns
	Clock Low To Output Valid (C_L = 15pF)			6	ns
t_{WHSL}	Write Protect Setup Time Before CS# Low	20			ns
t_{SHWL}	Write Protect Hold Time After CS# High	100			ns
t_{DP}	CS# High To Deep Power-Down Mode			3	μs
t_{RES1}	CS# High To Standby Mode Without Electronic Signature Read			20	μs
t_{RES2}	CS# High To Standby Mode With Electronic Signature Read			20	μs
t_{SUS}	CS# High To Next Command After Suspend			20	μs
t_{RS}	Latency Between Resume And Next Suspend	100			μs
t_{RST}	CS# High To Next Command After Reset (Except From Erase)			30	μs
t_{RST_E}	CS# High To Next Command After Reset (From Erase)			12	ms
t_W	Write Status Register Cycle Time		1	25	ms
t_{BP1}	Byte Program Time (First Byte)		25	80	μs
t_{BP2}	Addition Byte Program Time (After First Byte)		2.5	8	μs
t_{PP}	Page Programming Time		0.7	3	ms
t_{SE}	Sector Erase Time		40	400	ms
t_{BE1}	Block Erase Time (32K Bytes)		0.15	1.2	s

t_{BE2}	Block Erase Time (64K Bytes)		0.18	2	s
t_{CE}	Chip Erase Time (GD25LQ16C)		5	16	s

Note:

1. Typical values given for TA=25°C.
2. Value guaranteed by design and/or characterization, not 100% tested in production.

(T= -40℃~125℃, VCC=1.65~2.1V, C_L=30pf)

Symbol	Parameter	Min.	Typ.	Max.	Unit.
F_C	Serial Clock Frequency For: 0BH, 3BH, BBH, 6BH, EBH			90	MHz
f_R	Serial Clock Frequency For: Read (03H)			80	MHz
t_{CLH}	Serial Clock High Time	4			ns
t_{CLL}	Serial Clock Low Time	4			ns
t_{CLCH}	Serial Clock Rise Time (Slew Rate)	0.1			V/ns
t_{CHCL}	Serial Clock Fall Time (Slew Rate)	0.1			V/ns
t_{SLCH}	CS# Active Setup Time	5			ns
t_{CHSH}	CS# Active Hold Time	5			ns
t_{SHCH}	CS# Not Active Setup Time	5			ns
t_{CHSL}	CS# Not Active Hold Time	5			ns
t_{SHSL}	CS# High Time (Read/Write)	20			ns
t_{SHQZ}	Output Disable Time			6	ns
t_{CLQX}	Output Hold Time	1.2			ns
t_{DVCH}	Data In Setup Time	2			ns
t_{CHDX}	Data In Hold Time	2			ns
t_{HLCH}	HOLD# Low Setup Time (Relative To Clock)	5			ns
t_{HHCH}	HOLD# High Setup Time (Relative To Clock)	5			ns
t_{CHHL}	HOLD# High Hold Time (Relative To Clock)	5			ns
t_{CHHH}	HOLD# Low Hold Time (Relative To Clock)	5			ns
t_{HLQZ}	HOLD# Low To High-Z Output			6	ns
t_{HHQX}	HOLD# High To Low-Z Output			6	ns
t_{CLQV}	Clock Low To Output Valid (C_L = 30pF)			7	ns
	Clock Low To Output Valid (C_L = 15pF)			6	ns
t_{WHSL}	Write Protect Setup Time Before CS# Low	20			ns
t_{SHWL}	Write Protect Hold Time After CS# High	100			ns
t_{DP}	CS# High To Deep Power-Down Mode			3	μs
t_{RES1}	CS# High To Standby Mode Without Electronic Signature Read			20	μs
t_{RES2}	CS# High To Standby Mode With Electronic Signature Read			20	μs
t_{SUS}	CS# High To Next Command After Suspend			20	μs
t_{RS}	Latency Between Resume And Next Suspend	100			μs
t_{RST}	CS# High To Next Command After Reset (Except From Erase)			30	μs
t_{RST_E}	CS# High To Next Command After Reset (From Erase)			12	ms
t_W	Write Status Register Cycle Time		1	25	ms
t_{BP1}	Byte Program Time (First Byte)		25	80	μs
t_{BP2}	Addition Byte Program Time (After First Byte)		2.5	8	μs
t_{PP}	Page Programming Time		0.7	4	ms
t_{SE}	Sector Erase Time		40	400	ms
t_{BE1}	Block Erase Time (32K Bytes)		0.15	1.8	s

t_{BE2}	Block Erase Time (64K Bytes)		0.18	3.2	s
t_{CE}	Chip Erase Time (GD25LQ16C)		5	24	s

Note:

1. Typical values given for TA=25°C.
2. Value guaranteed by design and/or characterization, not 100% tested in production.

Figure42. Serial Input Timing

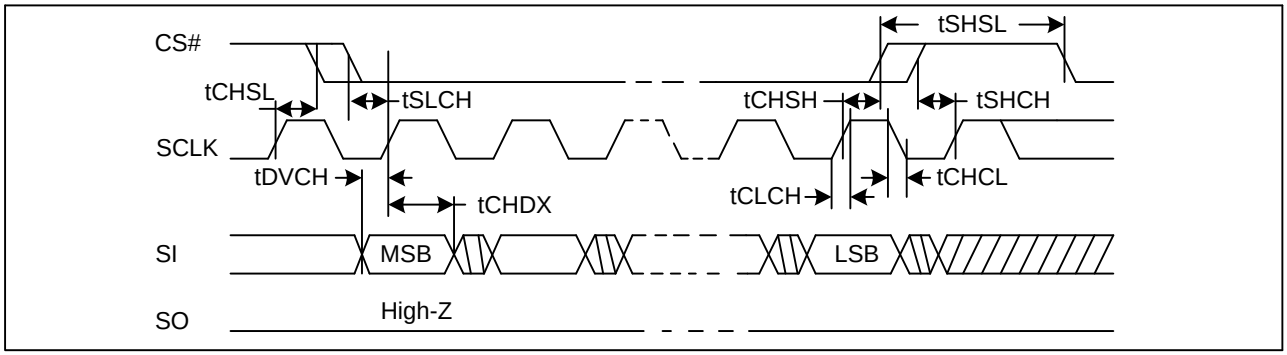

Figure43. Output Timing

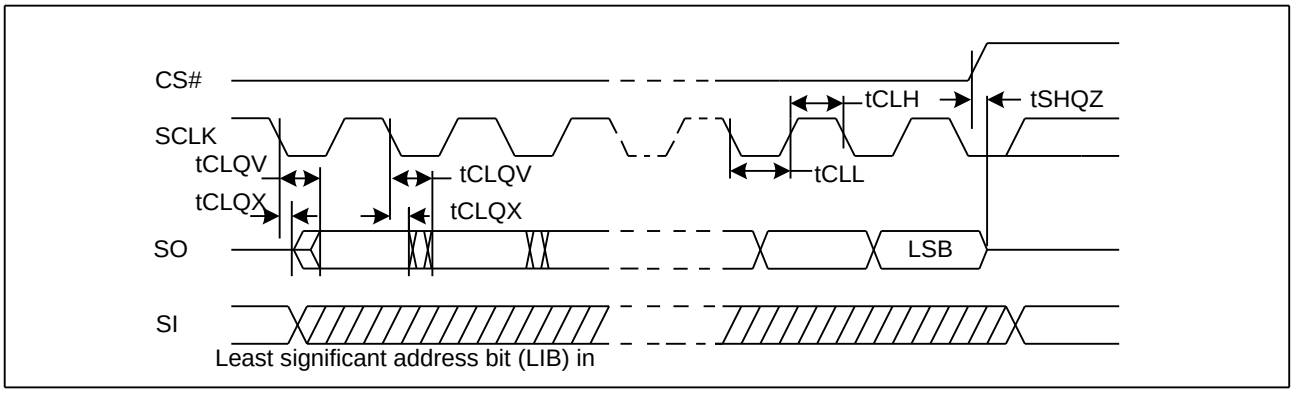

Figure44. Resume to Suspend Timing Diagram

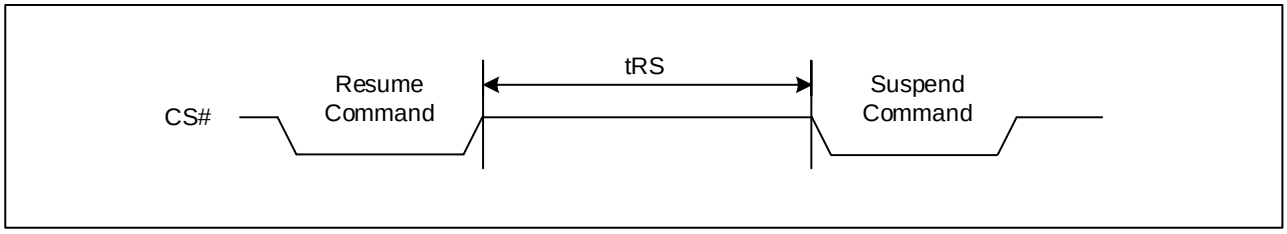

Figure45. Hold Timing

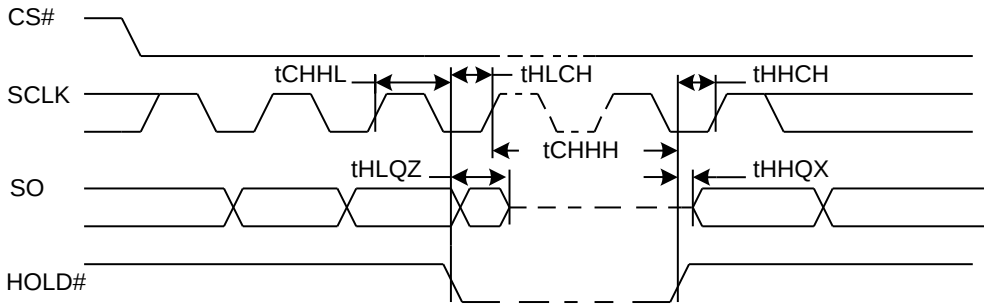

SI do not care during HOLD operation.

9 ORDERING INFORMATION

GD XX XX XX X X X X X

Packing
T or no mark: Tube
Y: Tray
R: Tape and Reel

Green Code
G: Pb Free + Halogen Free Green Package

Temperature Range
I: Industrial (-40℃ to +85℃)
J: Industrial (-40℃ to +105℃)
E: Industrial (-40℃ to +125℃)
F: Industrial+ (-40℃ to +85℃)
3: Automotive (-40℃ to +85℃)*
2: Automotive (-40℃ to +105℃)*
A: Automotive (-40℃ to +125℃)*

Package Type
T: SOP8 150mil
S: SOP8 208mil
M: VSOP8 150mil
V: VSOP8 208mil
H: USON8 (3x3mm)
N: USON8 (3x4mm)
Q: USON8 (4x4mm, 0.45mm thickness)
W: WSON8 (6x5mm)
8: LGA8 (3x2mm)
L: WLCSP

Generation
C: C Version

Density
16: 16M bit

Series
LQ: 1.8V, 4KB Uniform Sector

Product Family
25: SPI Interface Flash

*** Please contact GigaDevice sales for automotive products.**

9.1 Valid Part Numbers

Please contact GigaDevice regional sales for the latest product selection and available form factors.

Temperature Range I: Industrial (-40℃ to +85℃)

Product Number	Density	Package Type
GD25LQ16CTIG	16Mbit	SOP8 150mil
GD25LQ16CSIG	16Mbit	SOP8 208mil
GD25LQ16CMIG	16Mbit	VSOP8 150mil
GD25LQ16CVIG	16Mbit	VSOP8 208mil
GD25LQ16CHIG	16Mbit	USON8 (3x3mm)
GD25LQ16CNIG	16Mbit	USON8 (3x4mm)
GD25LQ16CQIG	16Mbit	USON8 (4x4mm, 0.45mm thickness)
GD25LQ16CWIG	16Mbit	WSON8 (6x5mm)
GD25LQ16C8IG	16Mbit	LGA8 (3x2mm)
GD25LQ16CLIGR	16Mbit	WLCSP

Temperature Range J: Industrial (-40℃ to +105℃)

Product Number	Density	Package Type
GD25LQ16CTJG	16Mbit	SOP8 150mil
GD25LQ16CSJG	16Mbit	SOP8 208mil
GD25LQ16CMJG	16Mbit	VSOP8 150mil
GD25LQ16CVJG	16Mbit	VSOP8 208mil
GD25LQ16CHJG	16Mbit	USON8 (3x3mm)
GD25LQ16CNJG	16Mbit	USON8 (3x4mm)
GD25LQ16CQJG	16Mbit	USON8 (4x4mm, 0.45mm thickness)
GD25LQ16CWJG	16Mbit	WSON8 (6x5mm)
GD25LQ16C8JG	16Mbit	LGA8 (3x2mm)
GD25LQ16CLJGR	16Mbit	WLCSP

Temperature Range E: Industrial (-40℃ to +125℃)

Product Number	Density	Package Type
GD25LQ16CTEG	16Mbit	SOP8 150mil
GD25LQ16CSEG	16Mbit	SOP8 208mil
GD25LQ16CMEG	16Mbit	VSOP8 150mil
GD25LQ16CVEG	16Mbit	VSOP8 208mil
GD25LQ16CHEG	16Mbit	USON8 (3x3mm)
GD25LQ16CNEG	16Mbit	USON8 (3x4mm)
GD25LQ16CQEG	16Mbit	USON8 (4x4mm, 0.45mm thickness)
GD25LQ16CWEG	16Mbit	WSON8 (6x5mm)
GD25LQ16C8EG	16Mbit	LGA8 (3x2mm)
GD25LQ16CLEGR	16Mbit	WLCSP

Temperature Range F: Industrial+ (-40℃ to +85℃)

Product Number	Density	Package Type
GD25LQ16CTFG	16Mbit	SOP8 150mil
GD25LQ16CSFG	16Mbit	SOP8 208mil
GD25LQ16CMFG	16Mbit	VSOP8 150mil
GD25LQ16CVFG	16Mbit	VSOP8 208mil
GD25LQ16CHFG	16Mbit	USON8 (3x3mm)
GD25LQ16CNFG	16Mbit	USON8 (3x4mm)
GD25LQ16CQFG	16Mbit	USON8 (4x4mm, 0.45mm thickness)
GD25LQ16CWFG	16Mbit	WSON8 (6x5mm)
GD25LQ16C8FG	16Mbit	LGA8 (3x2mm)
GD25LQ16CLFGR	16Mbit	WLCSP

10 PACKAGE INFORMATION

10.1 Package SOP8 150MIL

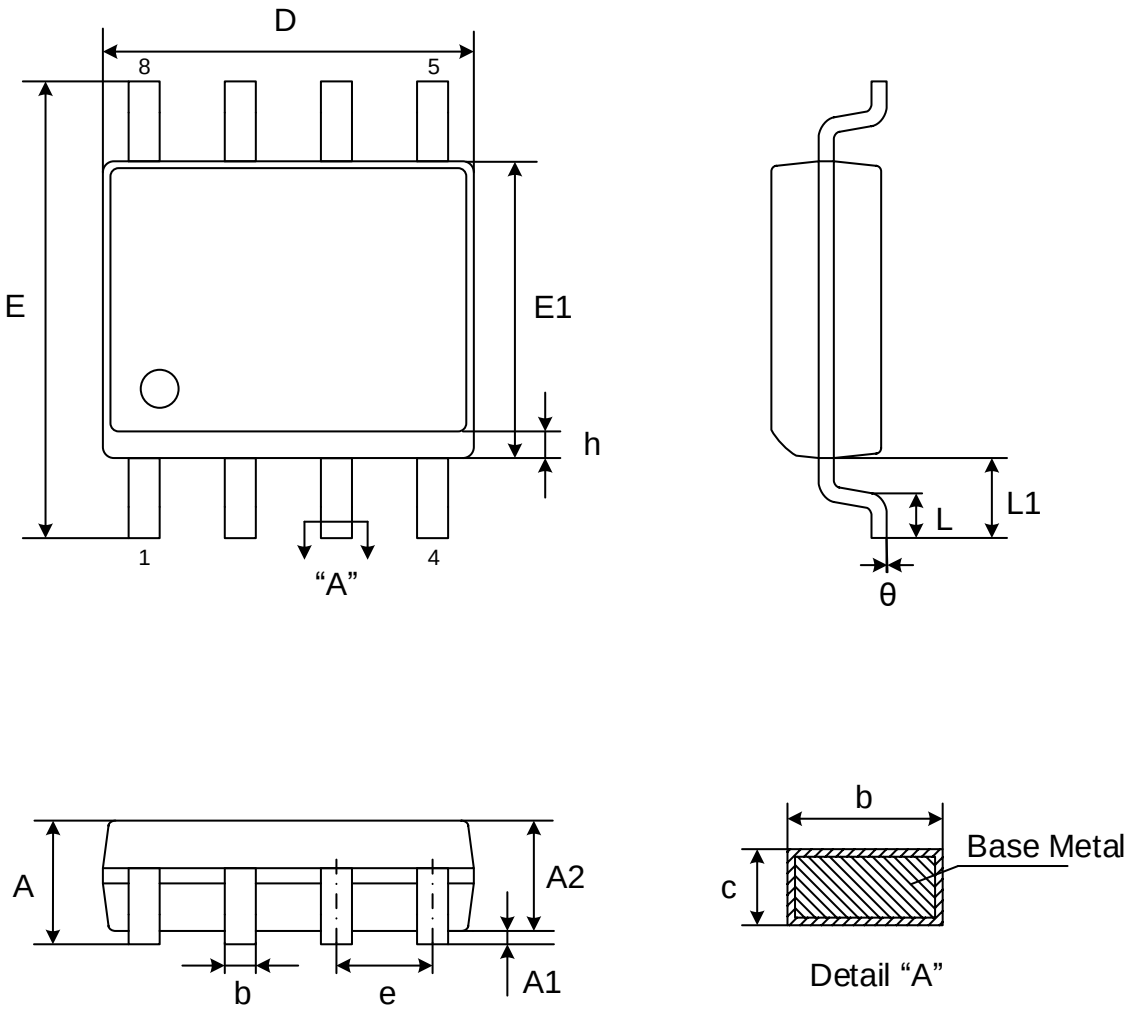

Dimensions

Symbol / Unit		A	A1	A2	b	c	D	E	E1	e	L	L1	h	θ
mm	Min	-	0.10	1.25	0.31	0.10	4.80	5.80	3.80	1.27	0.40	1.04	0.25	0°
	Nom	-	0.15	1.45	0.41	0.20	4.90	6.00	3.90		-		-	-
	Max	1.75	0.25	1.55	0.51	0.25	5.00	6.20	4.00		0.90		0.50	8°

Note:

1. Both the package length and width include the mold flash.
2. Seating plane: Max. 0.1mm.

10.2 Package SOP8 208MIL

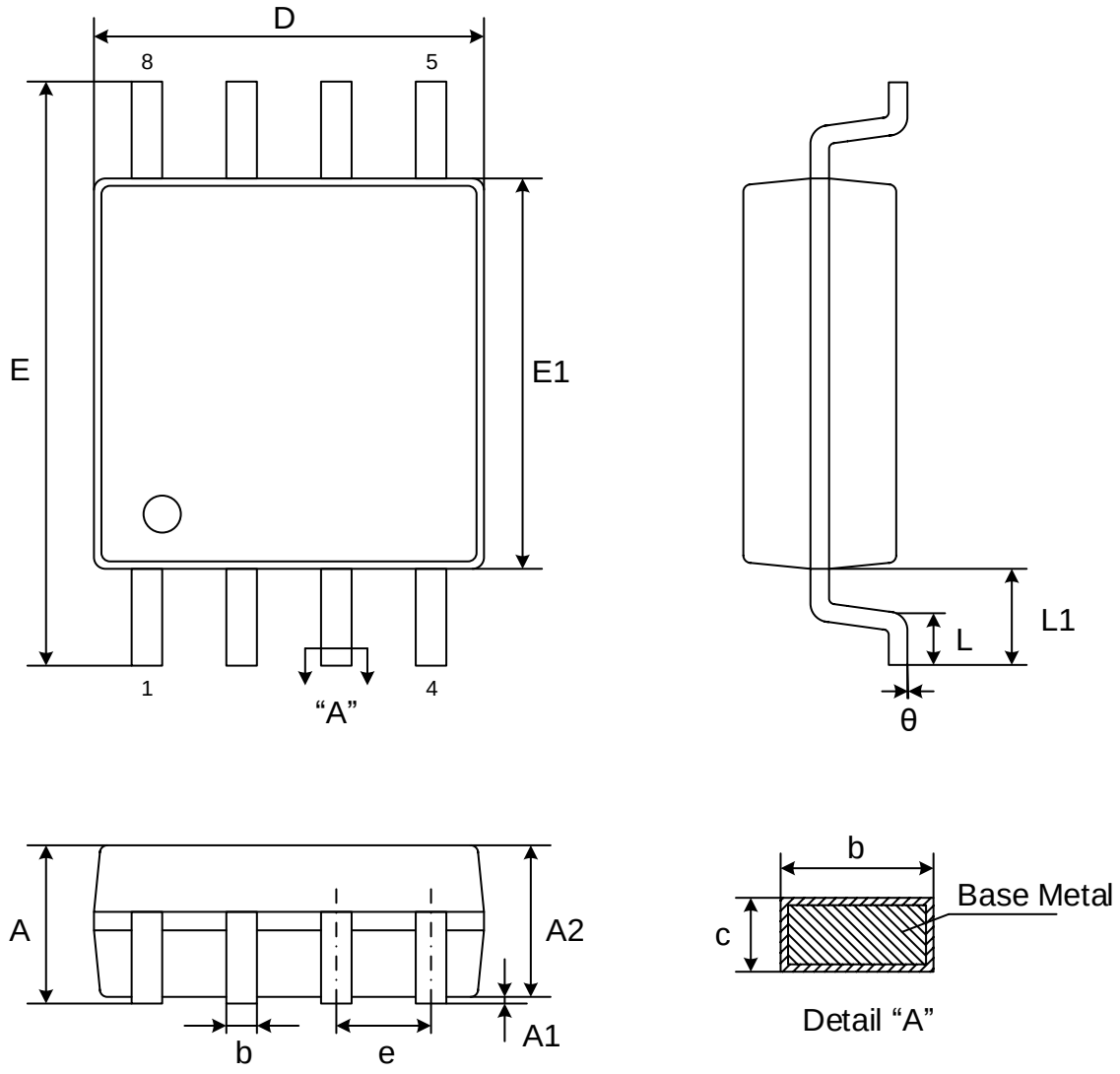

Dimensions

Symbol / Unit		A	A1	A2	b	c	D	E	E1	e	L	L1	θ
mm	Min	-	0.05	1.70	0.31	0.15	5.13	7.70	5.18	1.27	0.50	1.31	0°
	Nom	-	0.15	1.80	0.41	0.20	5.23	7.90	5.28		-		-
	Max	2.16	0.25	1.90	0.51	0.25	5.33	8.10	5.38		0.85		8°

Note:

1. Both the package length and width do not include the mold flash.
2. Seating plane: Max. 0.1mm.

10.3 Package VSOP8 150MIL

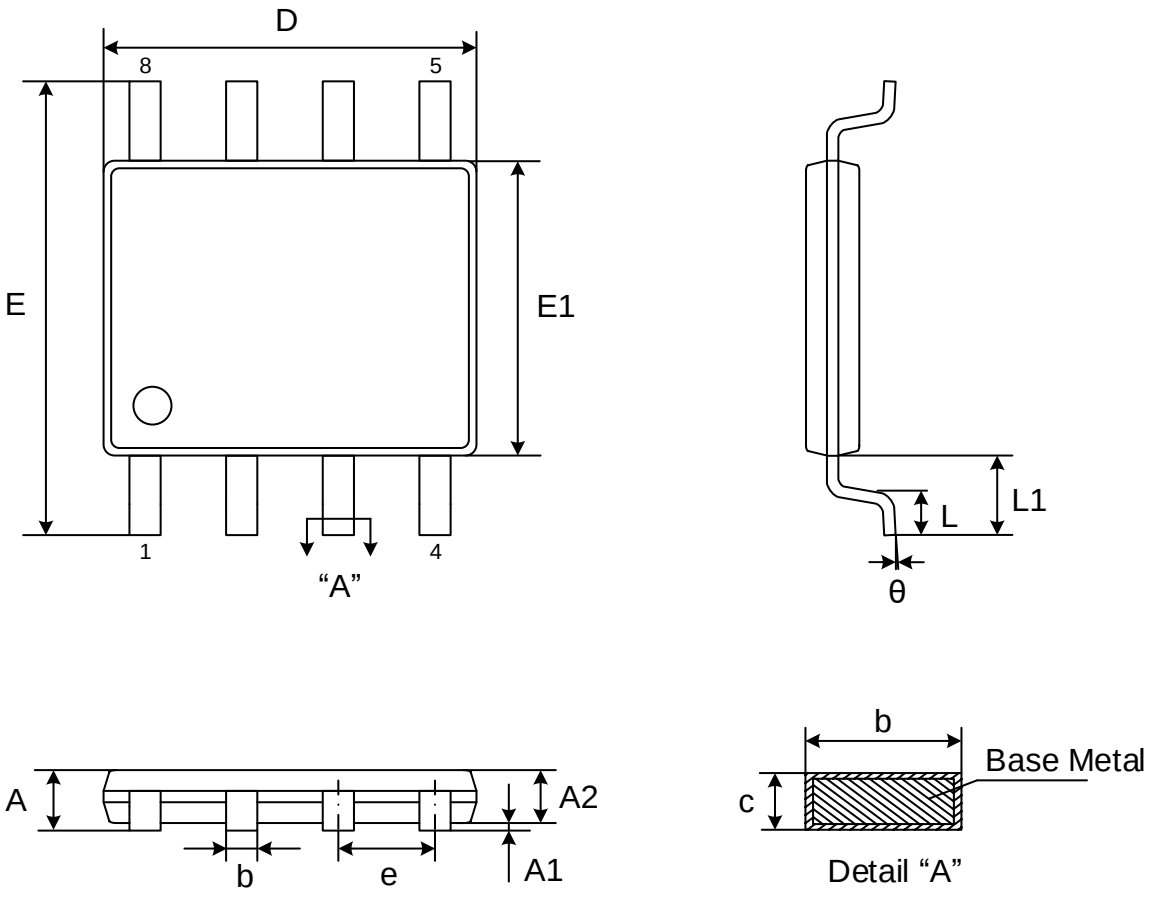

Dimensions

Symbol / Unit		A	A1	A2	b	c	D	E	E1	e	L	L1	θ
mm	Min	-	0.05	0.63	0.31	0.13	4.80	5.80	3.80	1.27	0.40	1.04	0°
	Nom	-	0.10	-	0.41	0.15	4.90	6.00	3.90		-		-
	Max	0.90	0.15	0.75	0.51	0.18	5.00	6.20	4.00		0.90		10°

Note:

1. Both the package length and width do not include the mold flash.
2. Seating plane: Max. 0.1mm.

10.4 Package VSOP8 208MIL

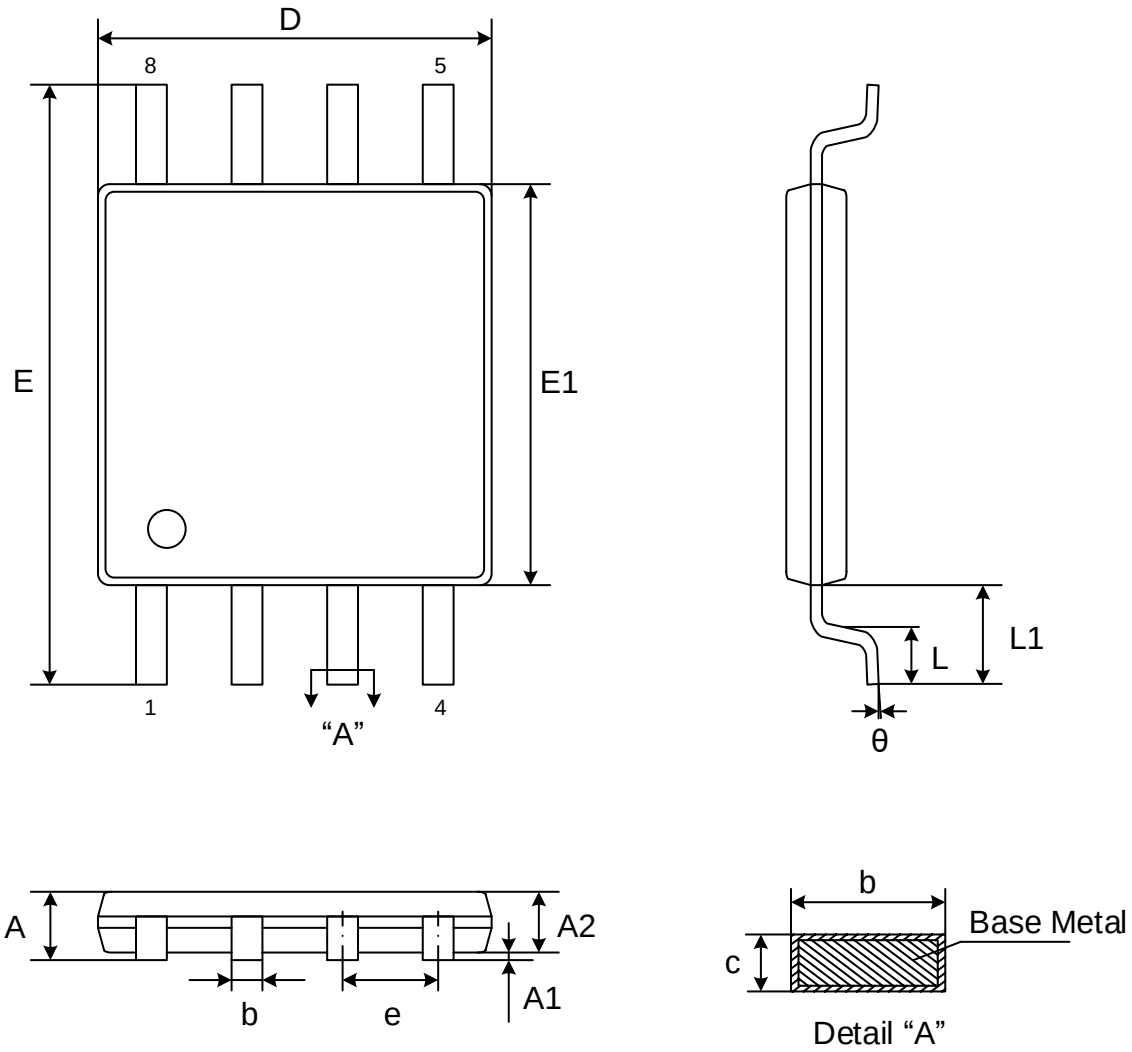

Dimensions

Symbol / Unit		A	A1	A2	b	c	D	E	E1	e	L	L1	θ
mm	Min	-	0.05	0.75	0.35	0.09	5.18	7.70	5.18	1.27	0.50	1.31	0°
	Nom	-	0.10	0.80	0.42	0.15	5.28	7.90	5.28		-		-
	Max	1.00	0.15	0.85	0.50	0.20	5.38	8.10	5.38		0.80		10°

Note:

1. Both the package length and width do not include the mold flash.
2. Seating plane: Max. 0.1mm.

10.5 Package USON8 (3*3mm)

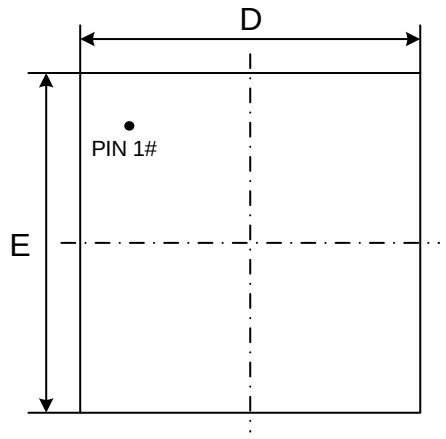

Top View

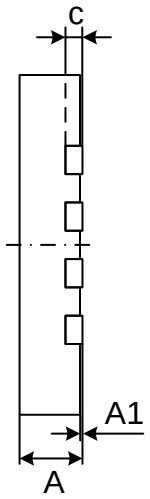

Side View

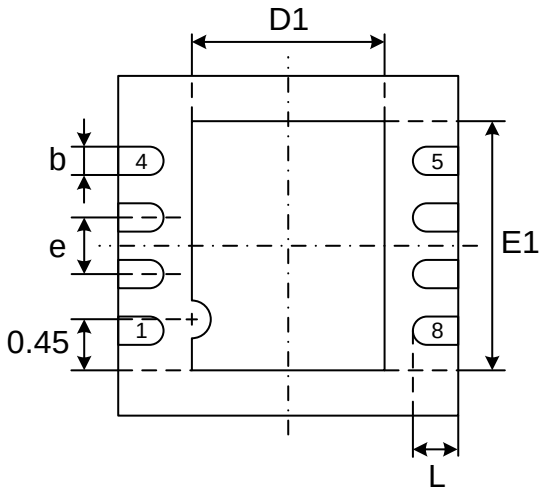

Bottom View

Dimensions

Symbol / Unit		A	A1	c	b	D	D1	E	E1	e	L
mm	Min	0.50	0.00	0.10	0.20	2.90	1.60	2.90	2.10	0.50	0.35
	Nom	0.55	0.02	0.15	0.25	3.00	1.70	3.00	2.20		0.40
	Max	0.60	0.05	0.20	0.30	3.10	1.80	3.10	2.30		0.45

Note:

1. Both the package length and width do not include the mold flash.
2. The exposed metal pad area on the bottom of the package is floating.
3. Coplanarity ≤0.08mm. Package edge tolerance≤0.10mm.
4. The lead shape may be of little difference according to different package factories. These lead shapes are compatible with each other.

10.6 Package USON8 (3*4mm)

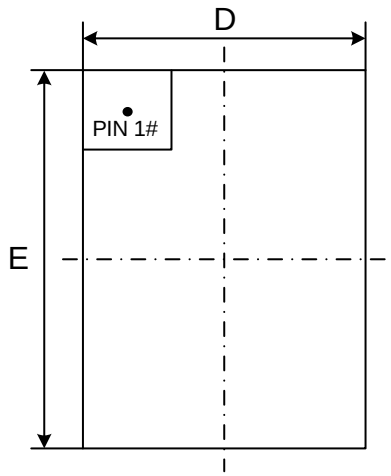

Top View

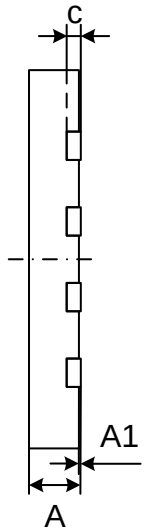

Side View

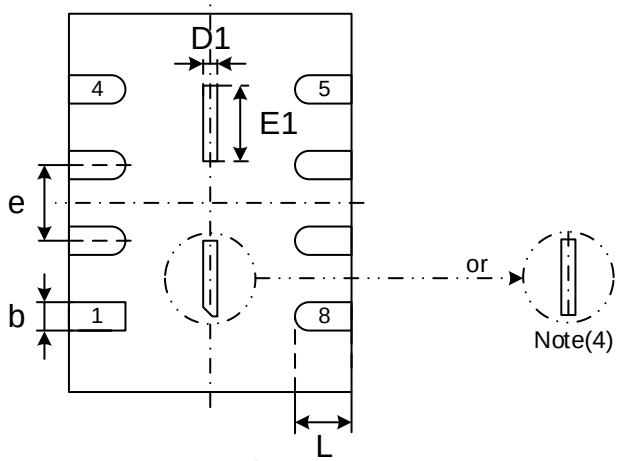

Bottom View

Dimensions

Symbol / Unit		A	A1	c	b	D	D1	E	E1	e	L
mm	Min	0.50	0.00	0.10	0.25	2.90	0.10	3.90	0.70	0.80	0.50
	Nom	0.55	0.02	0.15	0.30	3.00	0.20	4.00	0.80		0.60
	Max	0.60	0.05	0.20	0.35	3.10	0.30	4.10	0.90		0.70

Note:

1. Both the package length and width do not include the mold flash.
2. The exposed metal pad area on the bottom of the package is floating.
3. Coplanarity ≤0.08mm. Package edge tolerance≤0.10mm.
4. The lead shape may be of little difference according to different package factories. These lead shapes are compatible with each other.

10.7 Package USON8 (4*4mm, 0.45 thickness)

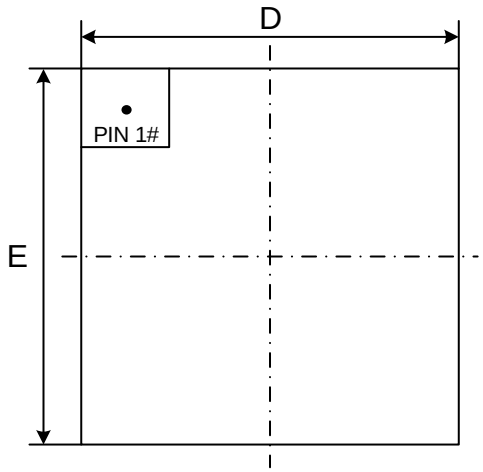

Top View

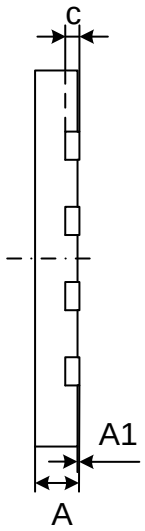

Side View

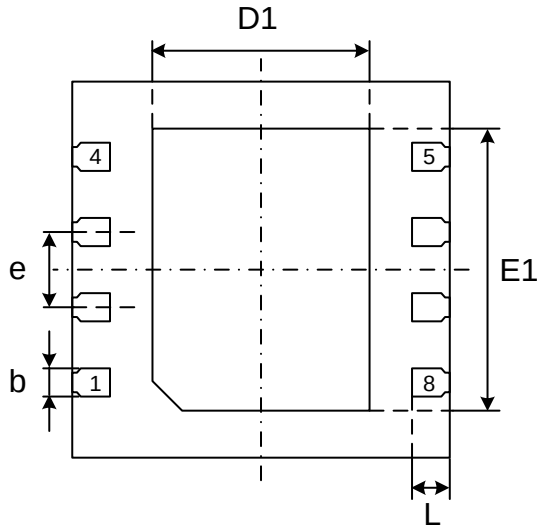

Bottom View

Dimensions

Symbol / Unit		A	A1	c	b	D	D1	E	E1	e	L
mm	Min	0.40	0.00	0.10	0.25	3.90	2.20	3.90	2.90	0.80	0.35
	Nom	0.45	0.02	0.15	0.30	4.00	2.30	4.00	3.00		0.40
	Max	0.50	0.05	0.20	0.35	4.10	2.40	4.10	3.10		0.45

Note:

1. Both the package length and width do not include the mold flash.
2. The exposed metal pad area on the bottom of the package is floating.
3. Coplanarity ≤0.08mm. Package edge tolerance≤0.10mm.
4. The lead shape may be of little difference according to different package factories. These lead shapes are compatible with each other

10.8 Package WSON8 (6*5mm)

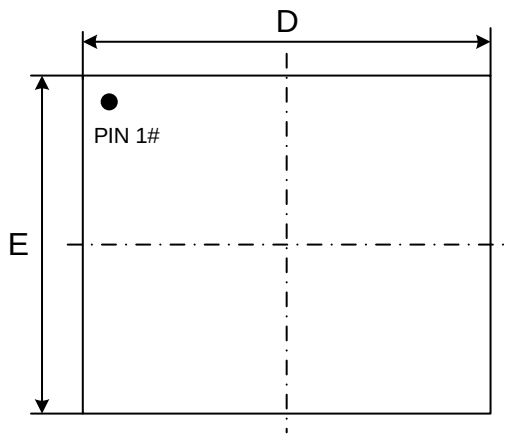

Top View

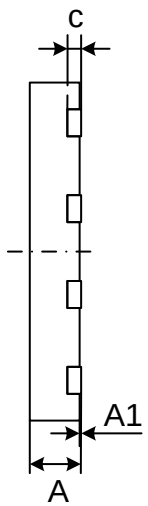

Side View

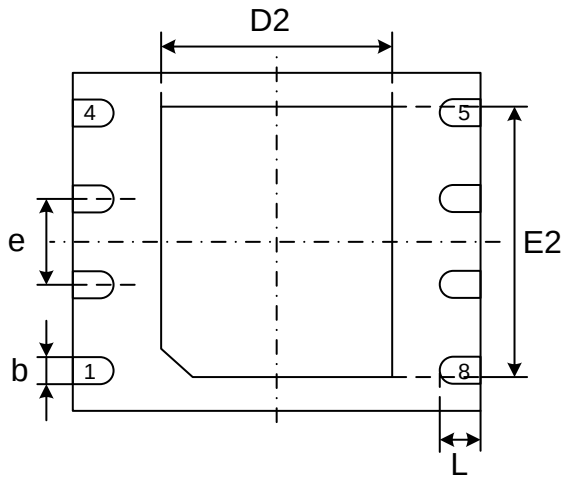

Bottom View

Dimensions

Symbol / Unit		A	A1	c	b	D	D2	E	E2	e	L
mm	Min	0.70	0.00	0.180	0.35	5.90	3.30	4.90	3.90	1.27	0.50
	Nom	0.75	0.02	0.203	0.40	6.00	3.40	5.00	4.00		0.60
	Max	0.80	0.05	0.250	0.50	6.10	3.50	5.10	4.10		0.75

Note:

1. Both the package length and width do not include the mold flash.
2. The exposed metal pad area on the bottom of the package is floating.
3. Coplanarity ≤0.08mm. Package edge tolerance≤0.10mm.
4. The lead shape may be of little difference according to different package lead frames. These lead shapes are compatible with each other.

10.9 Package LGA8 3*2mm

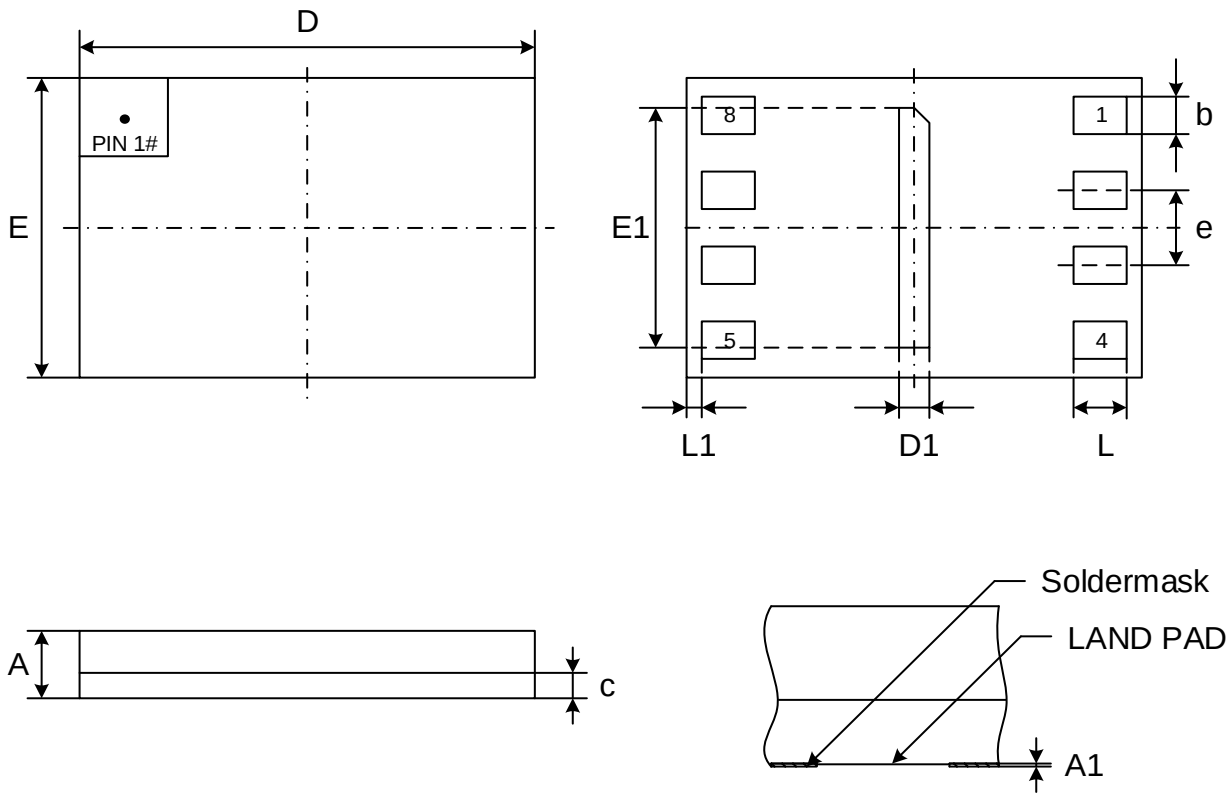

Dimensions

Symbol / Unit		A	A1	c	b	D	D1	E	E1	e	L	L1
mm	Min	0.34	0.00	0.14	0.20	2.90	0.15	1.90	1.55	0.50	0.28	0.03
	Nom	0.42	0.02	0.17	0.25	3.00	0.20	2.00	1.60		0.35	0.10
	Max	0.50	0.05	0.20	0.30	3.10	0.25	2.10	1.65		0.43	0.18

Note:

1. Both the package length and width do not include the mold flash.
2. The exposed metal pad area on the bottom is connected to VSS inside the package.
3. Coplanarity ≤0.08mm. Package edge tolerance≤0.10mm.
4. The lead shape may be of little difference according to different package factories. These lead shapes are compatible with each other.

10.10 Package WLCSP

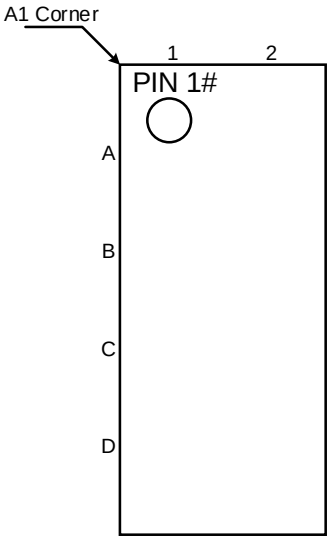

TOP VIEW
(MARK SIDE)

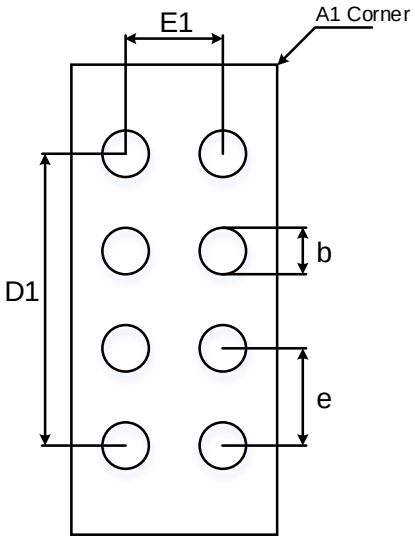

BOTTOM VIEW
(BALL SIDE)

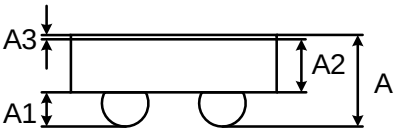

SIDE VIEW

Dimensions

Symbol / Unit		A	A1	A2	A3	D1	E1	e	b
mm	Min	0.440	0.147	0.250	0.025 BSC	1.500 BSC	0.500 BSC	0.500 BSC	0.209
	Nom	0.470	0.177	0.270					0.239
	Max	0.500	0.207	0.290					0.269

Note:

1. Please contact GigaDevice for full dimension information

11 REVISION HISTORY

Version No	Description	Page	Date
1.0	Initial release	All	2017-7-7
1.1	Delete WLCSP Package	P60	2017-7-24
1.2	Delete Security Register #0 in 48H command	P38	2017-8-21
1.3	Modify Input Pause Voltage from “0.2VCC to 0.8VCC” to “0.1VCC to 0.8VCC” Modify Input Timing Reference Voltage from “0.3VCC to 0.7VCC” to “0.2VCC to 0.7VCC” Modify tw max value from 15ms to 20ms Delete tRST_P and tRST_R Add tRST, of which the max value is 30us Add “T or no mark: Tube” to the 9th code of Part Number Add WLCSP Package Modify Note2 of USON8 and WSON8 Packages	P47 P47 P49 P49 P49 P51 P62 P57-60	2017-11-8
1.4	Add “F”, “J” and “E” to the 7th code of ordering information Update the description of SOP8, VSOP8, WSON8, USON8 and LGA8 packages	P52 P54-62	2018-1-24
1.5	Add “E1” values to the dimension table of USON8 4x4 package Delete E7H command and related contents Modify Icc2 max value from 5uA to 8uA Modify tBP1 from 15~30us to 25~50us	P60 --- P47 P48	2018-3-9
1.6	Modify tVSL min value from 5ms to 1.8ms Add tRS, of which the min value is 100us Add “3”, “2” and “A” to the 7th code of ordering information	P45 P48 P51	2018-4-16
1.7	Add DC parameters @-40℃~105℃ & @-40℃~125℃ Add AC parameters @-40℃~105℃ & @-40℃~125℃ Add valid part number of products @-40℃~105℃ & @-40℃~125℃	P48, 49 P52-55 P58, 59	2018-6-27
1.8	Add 4BH command Modify the sequence diagram of 42H command	P37 P38	2018-8-15
1.9	Modify Icc1 max value @-40℃~85℃ from 25uA to 28uA Modify Icc1 max value @-40℃~125℃ from 50uA to 60uA Modify Icc2 max value @-40℃~125℃ from 15uA to 20uA Modify tBE1 max value @-40℃~105℃ from 1s to 1.2s Modify tBE2 max value @-40℃~105℃ from 1.2s to 2s Modify tCE max value @-40℃~105℃ from 13s to 16s Modify tPP max value @-40℃~125℃ from 3ms to 4ms Modify tBE1 max value @-40℃~125℃ from 1s to 1.8s Modify tBE2 max value @-40℃~125℃ from 1.2s to 3.2s Modify tCE max value @-40℃~125℃ from 13s to 24s Remove tSE max values for 50K cycling Add tCLQV (CL = 15pF), of which the max value is 6ns	P47 P49 P49 P52 P52 P53 P54 P54 P54 P55 P50, 52, 54 P50, 52, 54	2018-10-26

2.0	Update the description of USON8 3x4mm Modify the min value of “A” in the package of WLCSP from 0.430mm to 0.440mm	P65 P69	2019-6-3
2.1	Modify note2 of LGA8 3x2mm package	P68	2019-12-30