LA-LatticeXP2 Family Data Sheet

DS1024 Version 1.5, February 2015

LA-LatticeXP2 Family Data Sheet Introduction

February 2015 | Data Sheet DS1024

Features

- **flexiFLASH™ Architecture**
  - Instant-on
  - Infinitely reconfigurable
  - Single chip
  - FlashBAK™ technology
  - Serial TAG memory
  - Design security
- **AEC-Q100 Tested and Qualified**
- **Live Update Technology**
  - TransFR™ technology
  - Secure updates with 128 bit AES encryption
  - Dual-boot with external SPI
- **sysDSP™ Block**
  - Three to five blocks for high performance Multiply and Accumulate
  - 12 to 20 18 x 18 multipliers
  - Each block supports one 36 x 36 multiplier or four 18 x 18 or eight 9 x 9 multipliers
- **Embedded and Distributed Memory**
  - Up to 276 kbits sysMEM™ EBR
  - Up to 35 kbits Distributed RAM
- **sysCLOCK™ PLLs**
  - Up to four analog PLLs per device
  - Clock multiply, divide and phase shifting
- **Flexible I/O Buffer**
  - sysIO™ buffer supports:
    - LVCMOS 33/25/18/15/12; LVTTL
    - SSTL 33/25/18 class I, II
    - HSTL15 class I; HSTL18 class I, II
    - PCI
    - LVDS, Bus-LVDS, MLVDS, LVPECL, RSDS
- **Pre-engineered Source Synchronous Interfaces**
  - DDR / DDR2 interfaces up to 200 MHz
  - 7:1 LVDS interfaces support display applications
  - XGMII
- **Density And Package Options**
  - 5k to 17k LUT4s, 86 to 358 I/Os
  - csBGA, ftBGA, TQFP and PQFP packages
  - Density migration supported
- **Flexible Device Configuration**
  - SPI (master and slave) Boot Flash Interface
  - Dual Boot Image supported
  - Soft Error Detect (SED) macro embedded
- **System Level Support**
  - IEEE 1149.1 and IEEE 1532 Compliant
  - On-chip oscillator for initialization & general use
  - Devices operate with 1.2 V power supply

Table 1-1. LA-LatticeXP2 Family Selection Guide

Device	**LA-XP2-5**	**LA-XP2-8**	**LA-XP2-17**
LUTs (K)	5	8	17
Distributed RAM (kbits)	10	18	35
EBR SRAM (kbits)	166	221	276
EBR SRAM Blocks	9	12	15
sysDSP Blocks	3	4	5
18 x 18 Multipliers	12	16	20
V_{CC} Voltage	1.2	1.2	1.2
GPLL	2	2	4
Max Available I/O	172	201	201
Packages and I/O Combinations			
132-Ball csBGA (8 x 8 mm)	86	86	
144-Pin TQFP (20 x 20 mm)	100	100	
208-Pin PQFP (28 x 28 mm)	146	146	146
256-Ball ftBGA (17 x17 mm)	172	201	201

© 2015 Lattice Semiconductor Corp. All Lattice trademarks, registered trademarks, patents, and disclaimers are as listed at www.latticesemi.com/legal. All other brand or product names are trademarks or registered trademarks of their respective holders. The specifications and information herein are subject to change without notice.

Introduction

LA-LatticeXP2 devices combine a Look-up Table (LUT) based FPGA fabric with non-volatile Flash cells in an architecture referred to as flexiFLASH.

The flexiFLASH approach provides benefits including instant-on, infinite reconfigurability, on chip storage with FlashBAK embedded block memory and Serial TAG memory and design security. The parts also support Live Update technology with TransFR, 128-bit AES Encryption and Dual-boot technologies.

The LA-LatticeXP2 FPGA fabric was optimized for the new technology from the outset with high performance and low cost in mind. LA-LatticeXP2 devices include LUT-based logic, distributed and embedded memory, Phase Locked Loops (PLLs), pre-engineered source synchronous I/O support and enhanced sysDSP blocks.

Lattice Diamond® design software allows large and complex designs to be efficiently implemented using the LA-LatticeXP2 family of FPGA devices. Synthesis library support for LA-LatticeXP2 is available for popular logic synthesis tools. The Diamond software uses the synthesis tool output along with the constraints from its floor planning tools to place and route the design in the LA-LatticeXP2 device. The Diamond design tool extracts the timing from the routing and back-annotates it into the design for timing verification.

Lattice provides many pre-designed Intellectual Property (IP) LatticeCORE™ modules for the LA-LatticeXP2 family. By using these IPs as standardized blocks, designers are free to concentrate on the unique aspects of their design, increasing their productivity.

LA-LatticeXP2 Family Data Sheet Architecture

February 2015 Data Sheet DS1024

Architecture Overview

Each LA-LatticeXP2 device contains an array of logic blocks surrounded by Programmable I/O Cells (PIC). Interspersed between the rows of logic blocks are rows of sysMEM™ Embedded Block RAM (EBR) and a row of sysDSP™ Digital Signal Processing blocks as shown in Figure 2-1.

On the left and right sides of the Programmable Functional Unit (PFU) array, there are Non-volatile Memory Blocks. In configuration mode the nonvolatile memory is programmed via the IEEE 1149.1 TAP port or the sysCONFIG™ peripheral port. On power up, the configuration data is transferred from the Non-volatile Memory Blocks to the configuration SRAM. With this technology, expensive external configuration memory is not required, and designs are secured from unauthorized read-back. This transfer of data from non-volatile memory to configuration SRAM via wide busses happens in microseconds, providing an “instant-on” capability that allows easy interfacing in many applications. LA-LatticeXP2 devices can also transfer data from the sysMEM EBR blocks to the Non-volatile Memory Blocks at user request.

There are two kinds of logic blocks, the PFU and the PFU without RAM (PFF). The PFU contains the building blocks for logic, arithmetic, RAM and ROM functions. The PFF block contains building blocks for logic, arithmetic and ROM functions. Both PFU and PFF blocks are optimized for flexibility allowing complex designs to be implemented quickly and efficiently. Logic Blocks are arranged in a two-dimensional array. Only one type of block is used per row.

LA-LatticeXP2 devices contain one or more rows of sysMEM EBR blocks. sysMEM EBRs are large dedicated 18 kbit memory blocks. Each sysMEM block can be configured in a variety of depths and widths of RAM or ROM. In addition, LA-LatticeXP2 devices contain up to two rows of DSP Blocks. Each DSP block has multipliers and adder/accumulators, which are the building blocks for complex signal processing capabilities.

Each PIC block encompasses two PIOs (PIO pairs) with their respective sysIO buffers. The sysIO buffers of the LA-LatticeXP2 devices are arranged into eight banks, allowing the implementation of a wide variety of I/O standards. PIO pairs on the left and right edges of the device can be configured as LVDS transmit/receive pairs. The PIC logic also includes pre-engineered support to aid in the implementation of high speed source synchronous standards such as 7:1 LVDS interfaces, found in many display applications, and memory interfaces including DDR and DDR2.

Other blocks provided include PLLs and configuration functions. The LA-LatticeXP2 architecture provides up to four General Purpose PLLs (GPLL) per device. The GPLL blocks are located in the corners of the device.

The configuration block that supports features such as configuration bit-stream de-encryption, transparent updates and dual boot support is located between banks two and three. Every device in the LA-LatticeXP2 family supports a sysCONFIG port, muxed with bank seven I/Os, which supports serial device configuration. A JTAG port is provided between banks two and three.

This family also provides an on-chip oscillator. LA-LatticeXP2 devices use 1.2 V as their core voltage.

© 2015 Lattice Semiconductor Corp. All Lattice trademarks, registered trademarks, patents, and disclaimers are as listed at www.latticesemi.com/legal. All other brand or product names are trademarks or registered trademarks of their respective holders. The specifications and information herein are subject to change without notice.

Figure 2-1. Simplified Block Diagram, LA-LatticeXP2-17 Device (Top Level)

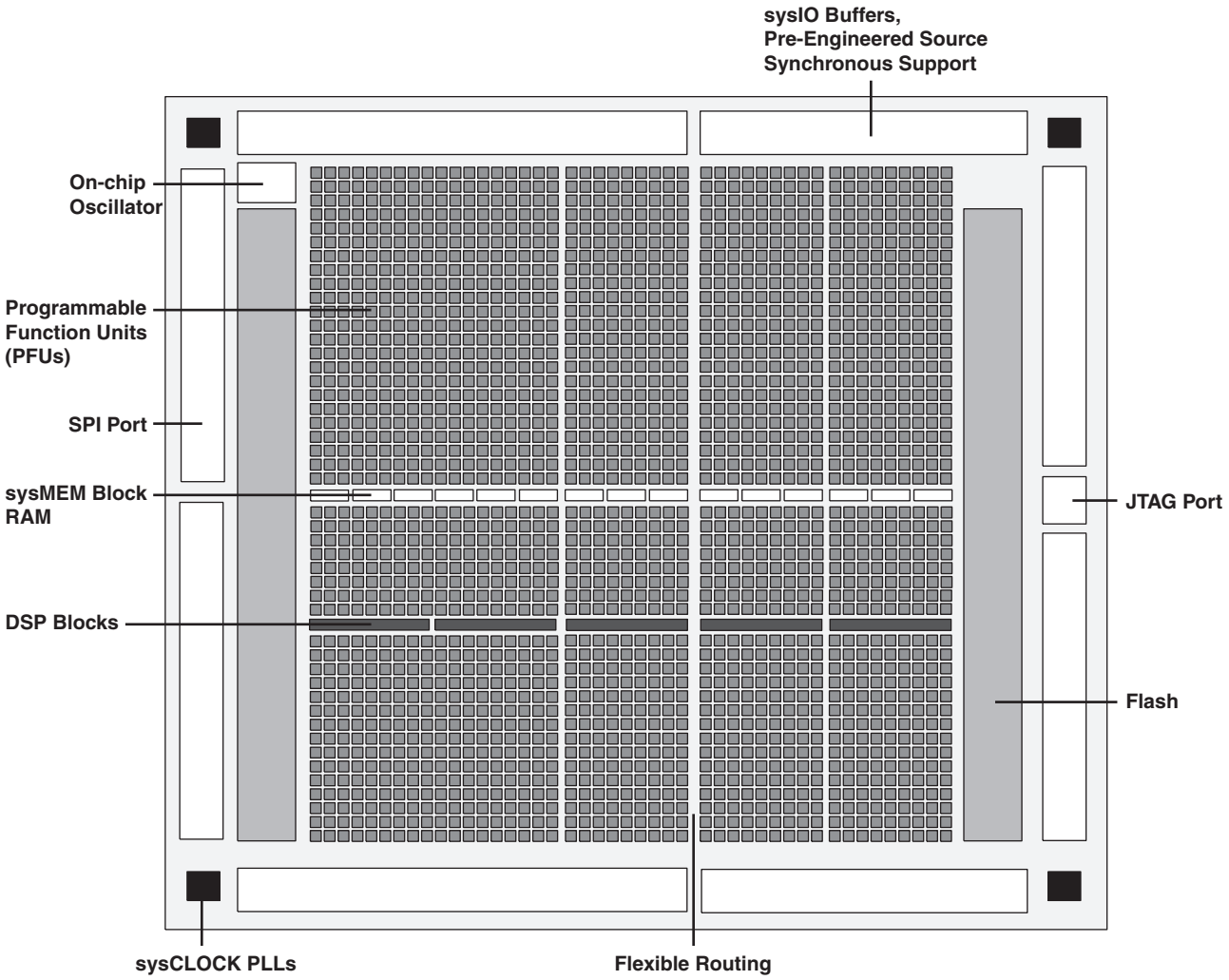

PFU Blocks

The core of the LA-LatticeXP2 device is made up of logic blocks in two forms, PFUs and PFFs. PFUs can be programmed to perform logic, arithmetic, distributed RAM and distributed ROM functions. PFF blocks can be programmed to perform logic, arithmetic and ROM functions. Except where necessary, the remainder of this data sheet will use the term PFU to refer to both PFU and PFF blocks.

Each PFU block consists of four interconnected slices, numbered Slice 0 through Slice 3, as shown in Figure 2-2. All the interconnections to and from PFU blocks are from routing. There are 50 inputs and 23 outputs associated with each PFU block.

Figure 2-2. PFU Diagram

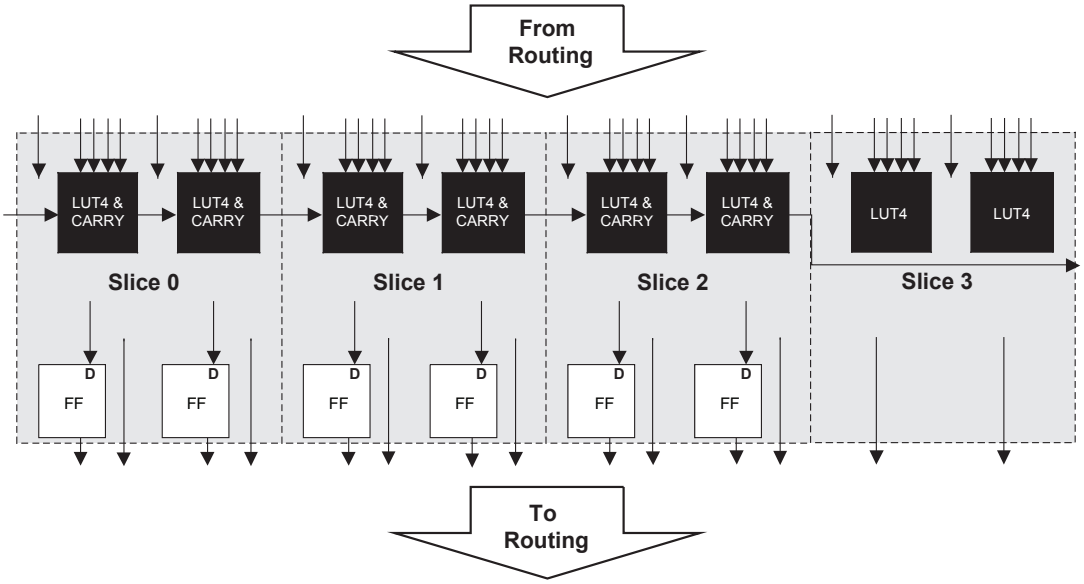

Slice

Slice 0 through Slice 2 contain two 4-input combinatorial Look-Up Tables (LUT4), which feed two registers. Slice 3 contains two LUT4s and no registers. For PFUs, Slice 0 and Slice 2 can also be configured as distributed memory, a capability not available in PFF blocks. Table 2-1 shows the capability of the slices in both PFF and PFU blocks along with the operation modes they enable. In addition, each PFU contains logic that allows the LUTs to be combined to perform functions such as LUT5, LUT6, LUT7 and LUT8. There is control logic to perform set/reset functions (programmable as synchronous/asynchronous), clock select, chip-select and wider RAM/ROM functions. Figure 2-3 shows an overview of the internal logic of the slice. The registers in the slice can be configured as positive/negative edge triggered or level sensitive clocks.

Table 2-1. Resources and Modes Available per Slice

Slice	PFU BLock		PFF Block	
	Resources	Modes	Resources	Modes
Slice 0	2 LUT4s and 2 Registers	Logic, Ripple, RAM, ROM	2 LUT4s and 2 Registers	Logic, Ripple, ROM
Slice 1	2 LUT4s and 2 Registers	Logic, Ripple, ROM	2 LUT4s and 2 Registers	Logic, Ripple, ROM
Slice 2	2 LUT4s and 2 Registers	Logic, Ripple, RAM, ROM	2 LUT4s and 2 Registers	Logic, Ripple, ROM
Slice 3	2 LUT4s	Logic, ROM	2 LUT4s	Logic, ROM

Slice 0 through Slice 2 have 14 input signals: 13 signals from routing and one from the carry-chain (from the adjacent slice or PFU). There are seven outputs: six to routing and one to carry-chain (to the adjacent PFU). Slice 3 has 13 input signals from routing and four signals to routing. Table 2-2 lists the signals associated with Slice 0 to Slice 2.

Figure 2-3. Slice Diagram

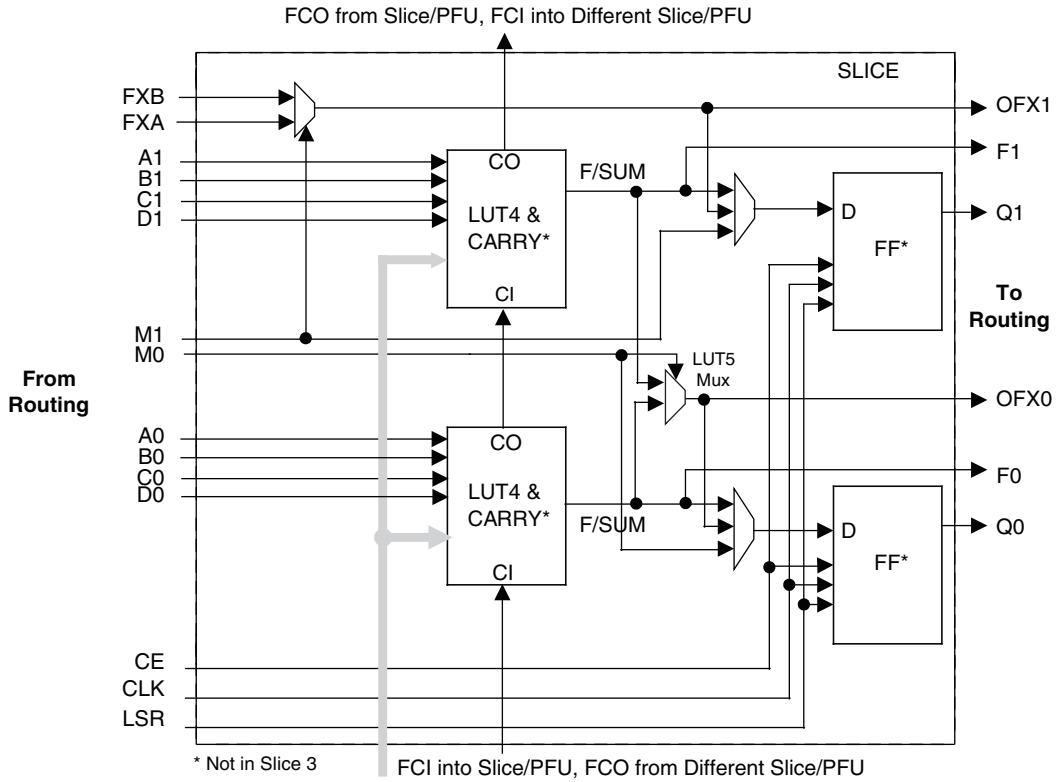

For Slices 0 and 2, memory control signals are generated from Slice 1 as follows:

WCK is CLK
WRE is from LSR
DI[3:2] for Slice 2 and DI[1:0] for Slice 0 data
WAD [A:D] is a 4bit address from Slice 1 LUT input

Table 2-2. Slice Signal Descriptions

Function	Type	Signal Names	Description
Input	Data signal	A0, B0, C0, D0	Inputs to LUT4
Input	Data signal	A1, B1, C1, D1	Inputs to LUT4
Input	Multi-purpose	M0	Multipurpose Input
Input	Multi-purpose	M1	Multipurpose Input
Input	Control signal	CE	Clock Enable
Input	Control signal	LSR	Local Set/Reset
Input	Control signal	CLK	System Clock
Input	Inter-PFU signal	FCI	Fast Carry-In[1]
Input	Inter-slice signal	FXA	Intermediate signal to generate LUT6 and LUT7
Input	Inter-slice signal	FXB	Intermediate signal to generate LUT6 and LUT7
Output	Data signals	F0, F1	LUT4 output register bypass signals
Output	Data signals	Q0, Q1	Register outputs
Output	Data signals	OFX0	Output of a LUT5 MUX
Output	Data signals	OFX1	Output of a LUT6, LUT7, LUT8[2] MUX depending on the slice
Output	Inter-PFU signal	FCO	Slice 2 of each PFU is the fast carry chain output[1]

1. See Figure 2-3 for connection details.
2. Requires two PFUs.

Modes of Operation

Each slice has up to four potential modes of operation: Logic, Ripple, RAM and ROM.

Logic Mode

In this mode, the LUTs in each slice are configured as LUT4s. A LUT4 has 16 possible input combinations. Four-input logic functions are generated by programming the LUT4. Since there are two LUT4s per slice, a LUT5 can be constructed within one slice. Larger LUTs such as LUT6, LUT7 and LUT8, can be constructed by concatenating two or more slices. Note that a LUT8 requires more than four slices.

Ripple Mode

Ripple mode allows efficient implementation of small arithmetic functions. In ripple mode, the following functions can be implemented by each slice:

- Addition 2-bit
- Subtraction 2-bit
- Add/Subtract 2-bit using dynamic control
- Up counter 2-bit
- Down counter 2-bit
- Up/Down counter with async clear
- Up/Down counter with preload (sync)
- Ripple mode multiplier building block
- Multiplier support
- Comparator functions of A and B inputs
  - A greater-than-or-equal-to B
  - A not-equal-to B
  - A less-than-or-equal-to B

Two carry signals, FCI and FCO, are generated per slice in this mode, allowing fast arithmetic functions to be constructed by concatenating slices.

RAM Mode

In this mode, a 16x4-bit distributed Single Port RAM (SPR) can be constructed using each LUT block in Slice 0 and Slice 2 as a 16x1-bit memory. Slice 1 is used to provide memory address and control signals. A 16x2-bit Pseudo Dual Port RAM (PDPR) memory is created by using one slice as the read-write port and the other companion slice as the read-only port.

The Lattice design tools support the creation of a variety of different size memories. Where appropriate, the software will construct these using distributed memory primitives that represent the capabilities of the PFU. Table 2-3 shows the number of slices required to implement different distributed RAM primitives. For more information on using RAM in LA-LatticeXP2 devices, see TN1137, LatticeXP2 Memory Usage Guide.

Table 2-3. Number of Slices Required For Implementing Distributed RAM

	SPR 16x4	PDPR 16x4
Number of slices	3	3

Note: SPR = Single Port RAM, PDPR = Pseudo Dual Port RAM

ROM Mode

ROM mode uses the LUT logic; hence, Slices 0 through 3 can be used in the ROM mode. Preloading is accomplished through the programming interface during PFU configuration.

Routing

There are many resources provided in the LA-LatticeXP2 devices to route signals individually or as busses with related control signals. The routing resources consist of switching circuitry, buffers and metal interconnect (routing) segments.

The inter-PFU connections are made with x1 (spans two PFU), x2 (spans three PFU) or x6 (spans seven PFU) connections. The x1 and x2 connections provide fast and efficient connections in horizontal and vertical directions. The x2 and x6 resources are buffered to allow both short and long connections routing between PFUs.

The LA-LatticeXP2 family has an enhanced routing architecture to produce a compact design. The Diamond design tool takes the output of the synthesis tool and places and routes the design. Generally, the place and route tool is completely automatic, although an interactive routing editor is available to optimize the design.

sysCLOCK Phase Locked Loops (PLL)

The sysCLOCK PLLs provide the ability to synthesize clock frequencies. The LA-LatticeXP2 family supports between two and four full featured General Purpose PLLs (GPLL). The architecture of the GPLL is shown in Figure 2-4.

CLKI, the PLL reference frequency, is provided either from the pin or from routing; it feeds into the Input Clock Divider block. CLKFB, the feedback signal, is generated from CLKOP (the primary clock output) or from a user clock pin/logic. CLKFB feeds into the Feedback Divider and is used to multiply the reference frequency.

Both the input path and feedback signals enter the Voltage Controlled Oscillator (VCO) block. The phase and frequency of the VCO are determined from the input path and feedback signals. A LOCK signal is generated by the VCO to indicate that the VCO is locked with the input clock signal.

The output of the VCO feeds into the CLKOP Divider, a post-scalar divider. The duty cycle of the CLKOP Divider output can be fine tuned using the Duty Trim block, which creates the CLKOP signal. By allowing the VCO to operate at higher frequencies than CLKOP, the frequency range of the GPLL is expanded. The output of the CLKOP Divider is passed through the CLKOK Divider, a secondary clock divider, to generate lower frequencies for the CLKOK output. For applications that require even lower frequencies, the CLKOP signal is passed through a divide-by-three divider to produce the CLKOK2 output. The CLKOK2 output is provided for applications that use source synchronous logic. The Phase/Duty Cycle/Duty Trim block is used to adjust the phase and duty cycle of the CLKOP Divider output to generate the CLKOS signal. The phase/duty cycle setting can be pre-programmed or dynamically adjusted.

The clock outputs from the GPLL; CLKOP, CLKOK, CLKOK2 and CLKOS, are fed to the clock distribution network.

For further information on the GPLL see TN1126, LatticeXP2 sysCLOCK PLL Design and Usage Guide.

Figure 2-4. General Purpose PLL (GPLL) Diagram

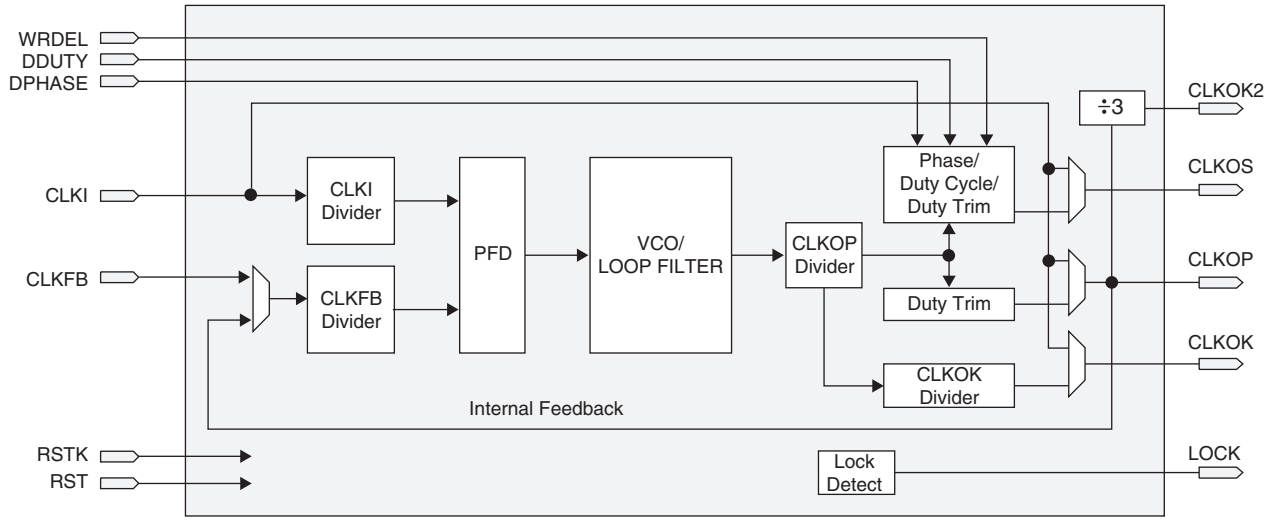

Table 2-4 provides a description of the signals in the GPLL blocks.

Table 2-4. GPLL Block Signal Descriptions

Signal	I/O	Description
CLKI	I	Clock input from external pin or routing
CLKFB	I	PLL feedback input from CLKOP (PLL internal), from clock net (CLKOP) or from a user clock (PIN or logic)
RST	I	“1” to reset PLL counters, VCO, charge pumps and M-dividers
RSTK	I	“1” to reset K-divider
DPHASE [3:0]	I	DPA Phase Adjust input
DDDUTY [3:0]	I	DPA Duty Cycle Select input
WRDEL	I	DPA Fine Delay Adjust input
CLKOS	O	PLL output clock to clock tree (phase shifted/duty cycle changed)
CLKOP	O	PLL output clock to clock tree (no phase shift)
CLKOK	O	PLL output to clock tree through secondary clock divider
CLKOK2	O	PLL output to clock tree (CLKOP divided by 3)
LOCK	O	“1” indicates PLL LOCK to CLKI

Clock Dividers

LA-LatticeXP2 devices have two clock dividers, one on the left side and one on the right side of the device. These are intended to generate a slower-speed system clock from a high-speed edge clock. The block operates in a ÷2, ÷4 or ÷8 mode and maintains a known phase relationship between the divided down clock and the high-speed clock based on the release of its reset signal. The clock dividers can be fed from the CLKOP output from the GPLLs or from the Edge Clocks (ECLK). The clock divider outputs serve as primary clock sources and feed into the clock distribution network. The Reset (RST) control signal resets the input and forces all outputs to low. The RELEASE signal releases outputs to the input clock. For further information on clock dividers, see TN1126, LatticeXP2 sysCLOCK PLL Design and Usage Guide. Figure 2-5 shows the clock divider connections.

Figure 2-5. Clock Divider Connections

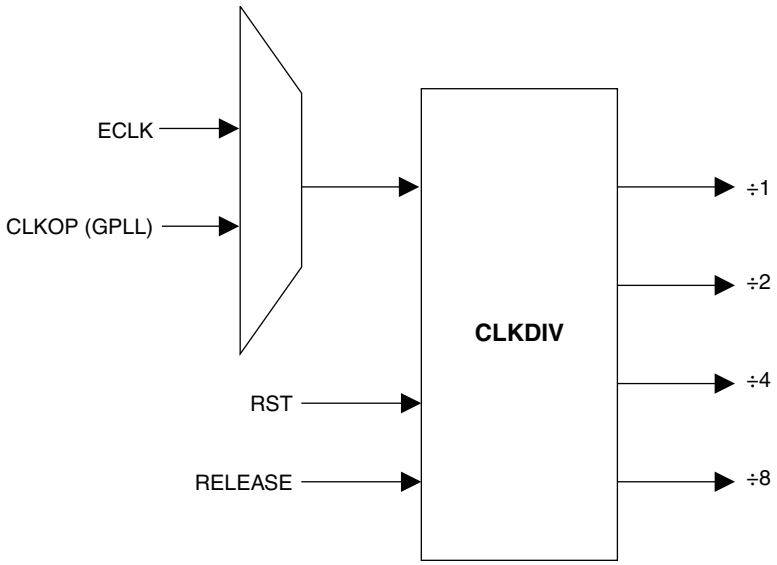

Clock Distribution Network

LA-LatticeXP2 devices have eight quadrant-based primary clocks and between six and eight flexible region-based secondary clocks/control signals. Two high performance edge clocks are available on each edge of the device to support high speed interfaces. The clock inputs are selected from external I/Os, the sysCLOCK PLLs, or routing. Clock inputs are fed throughout the chip via the primary, secondary and edge clock networks.

Primary Clock Sources

LA-LatticeXP2 devices derive primary clocks from four sources: PLL outputs, CLKDIV outputs, dedicated clock inputs and routing. LA-LatticeXP2 devices have two to four sysCLOCK PLLs, located in the four corners of the device. There are eight dedicated clock inputs, two on each side of the device. Figure 2-6 shows the primary clock sources.

Figure 2-6. Primary Clock Sources for LatticeXP2-17

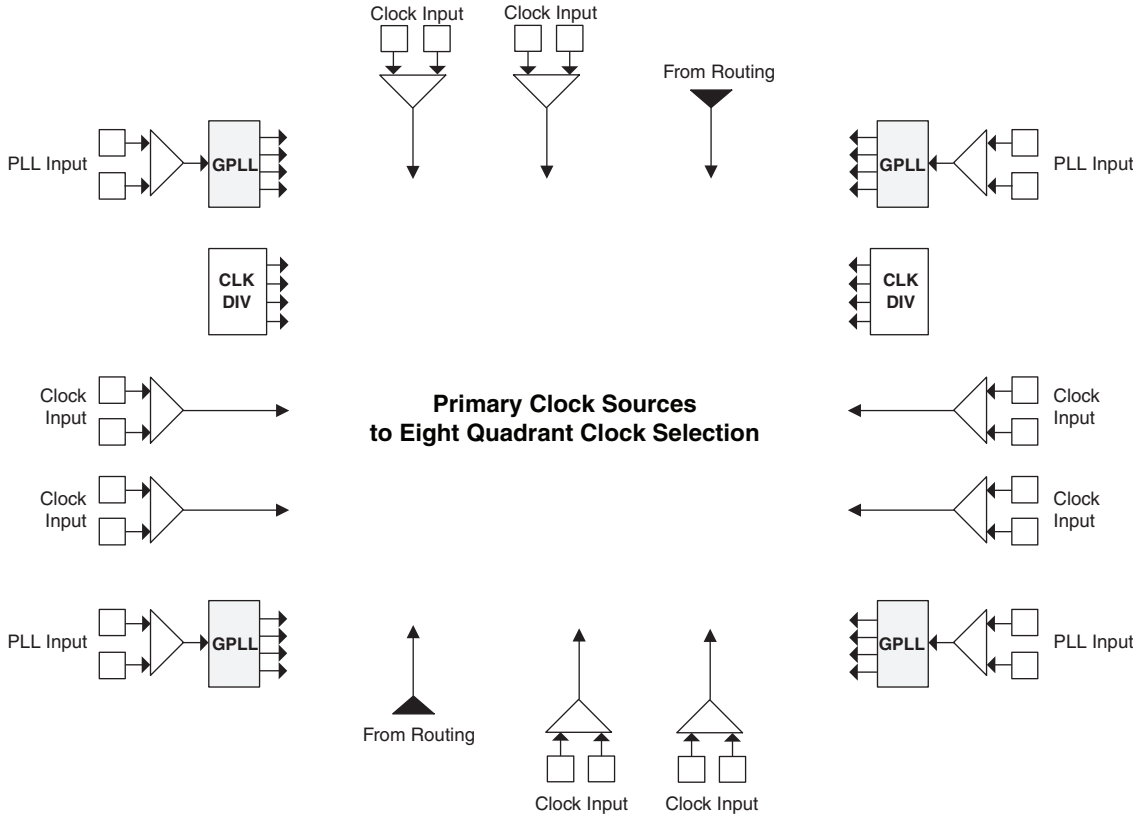

Note: This diagram shows sources for the LA-LatticeXP2-17 device. Smaller LA-LatticeXP2 devices have two GPLLs.

Secondary Clock/Control Sources

LA-LatticeXP2 devices derive secondary clocks (SC0 through SC7) from eight dedicated clock input pads and the rest from routing. Figure 2-7 shows the secondary clock sources.

Figure 2-7. Secondary Clock Sources

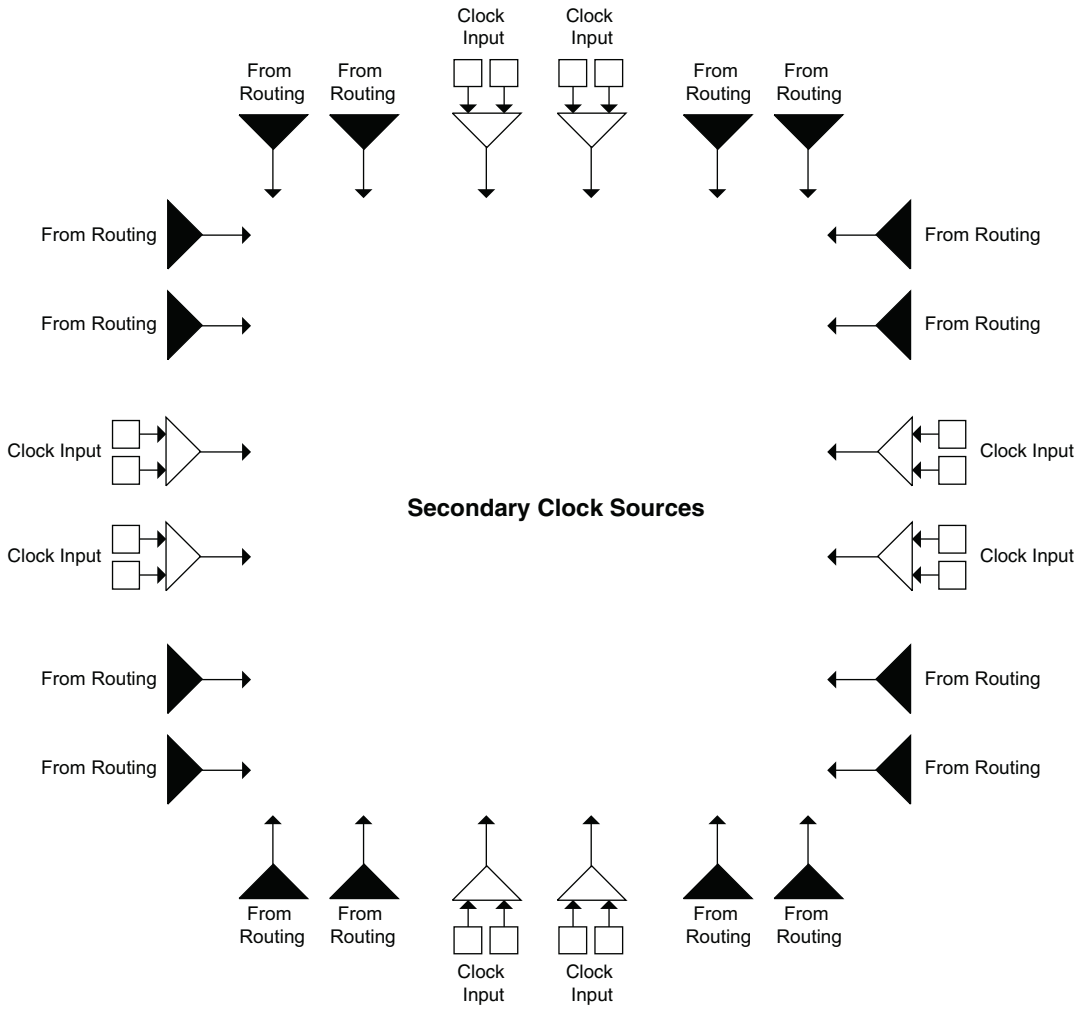

Edge Clock Sources

Edge clock resources can be driven from a variety of sources at the same edge. Edge clock resources can be driven from adjacent edge clock PIOs, primary clock PIOs, PLLs and clock dividers as shown in Figure 2-8.

Figure 2-8. Edge Clock Sources

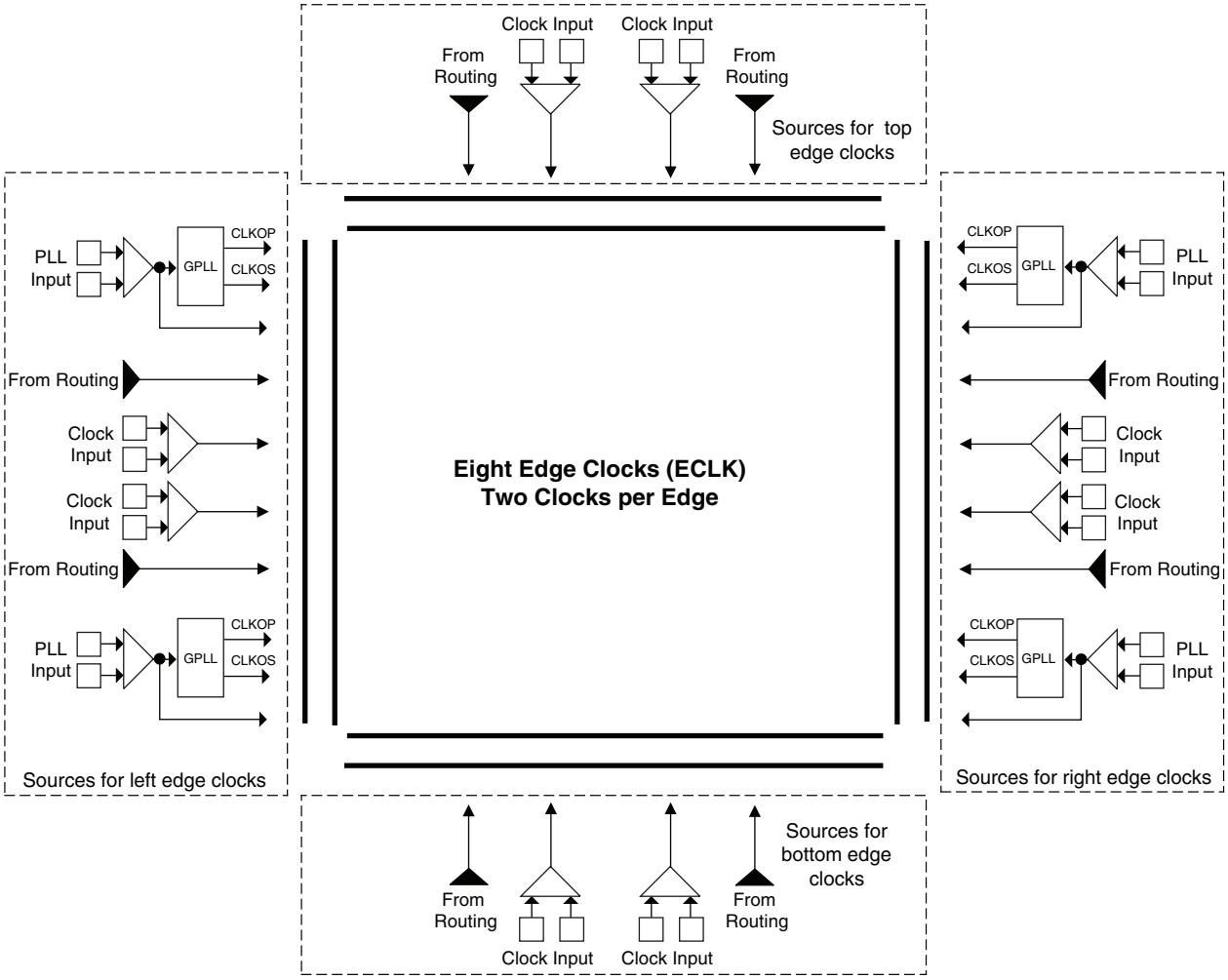

Note: This diagram shows sources for the LA-LatticeXP2-17 device. Smaller LA-LatticeXP2 devices have two GPLLs.

Primary Clock Routing

The clock routing structure in LA-LatticeXP2 devices consists of a network of eight primary clock lines (CLK0 through CLK7) per quadrant. The primary clocks of each quadrant are generated from muxes located in the center of the device. All the clock sources are connected to these muxes. Figure 2-9 shows the clock routing for one quadrant. Each quadrant mux is identical. If desired, any clock can be routed globally.

Figure 2-9. Per Quadrant Primary Clock Selection

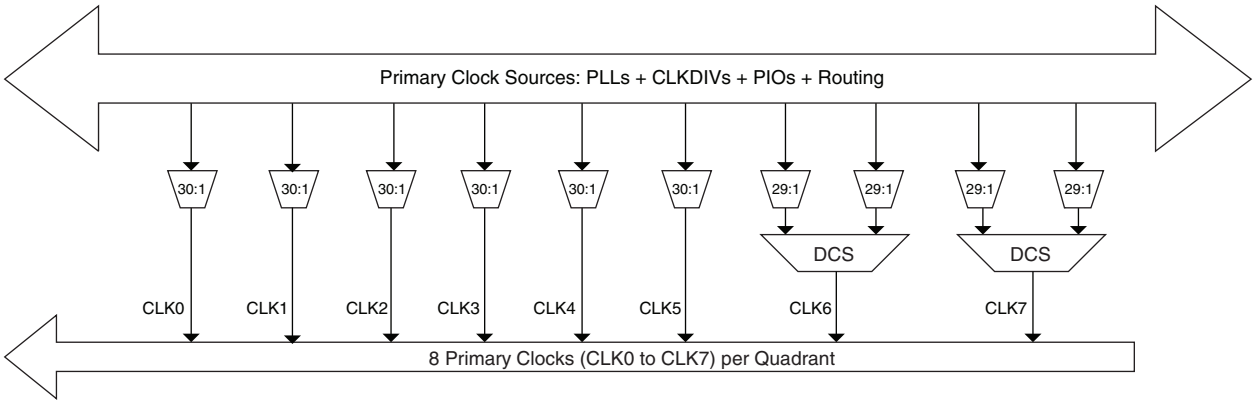

Dynamic Clock Select (DCS)

The DCS is a smart multiplexer function available in the primary clock routing. It switches between two independent input clock sources without any glitches or runt pulses. This is achieved irrespective of when the select signal is toggled. There are two DCS blocks per quadrant; in total, eight DCS blocks per device. The inputs to the DCS block come from the center muxes. The output of the DCS is connected to primary clocks CLK6 and CLK7 (see Figure 2-9).

Figure 2-10 shows the timing waveforms of the default DCS operating mode. The DCS block can be programmed to other modes. For more information on the DCS, see TN1126, LatticeXP2 sysCLOCK PLL Design and Usage Guide.

Figure 2-10. DCS Waveforms

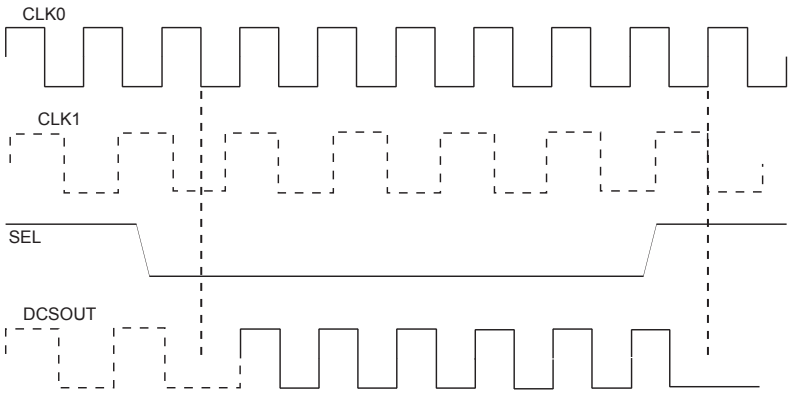

Secondary Clock/Control Routing

Secondary clocks in the LA-LatticeXP2 devices are region-based resources. The benefit of region-based resources is the relatively low injection delay and skew within the region, as compared to primary clocks. EBR rows, DSP rows and a special vertical routing channel bound the secondary clock regions. This special vertical routing channel aligns with either the left edge of the center DSP block in the DSP row or the center of the DSP row. Figure 2-11 shows this special vertical routing channel and the six secondary clock regions for the LA-

LatticeXP2-17. All LA-LatticeXP2 devices have six secondary clock regions and four secondary clocks (SC0 to SC3) which are distributed to every region.

The secondary clock muxes are located in the center of the device. Figure 2-12 shows the mux structure of the secondary clock routing. Secondary clocks SC0 to SC3 are used for clock and control and SC4 to SC7 are used for high fan-out signals.

Figure 2-11. Secondary Clock Regions LatticeXP2-17

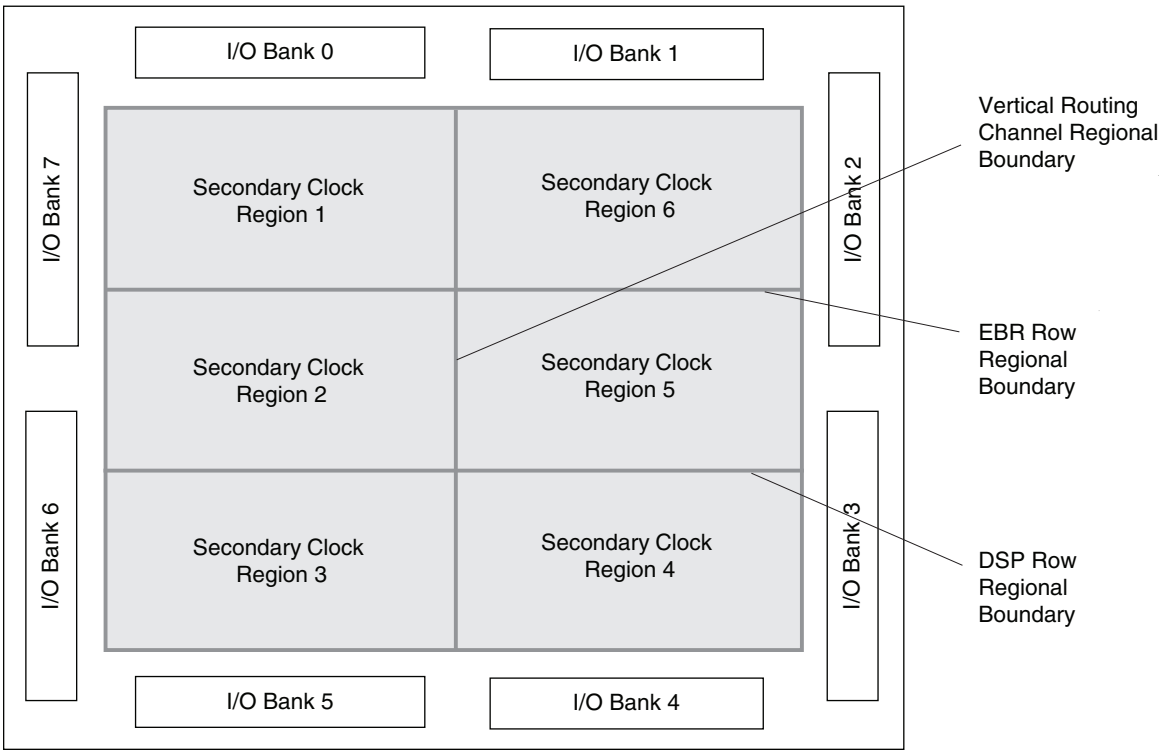

Figure 2-12. Secondary Clock Selection

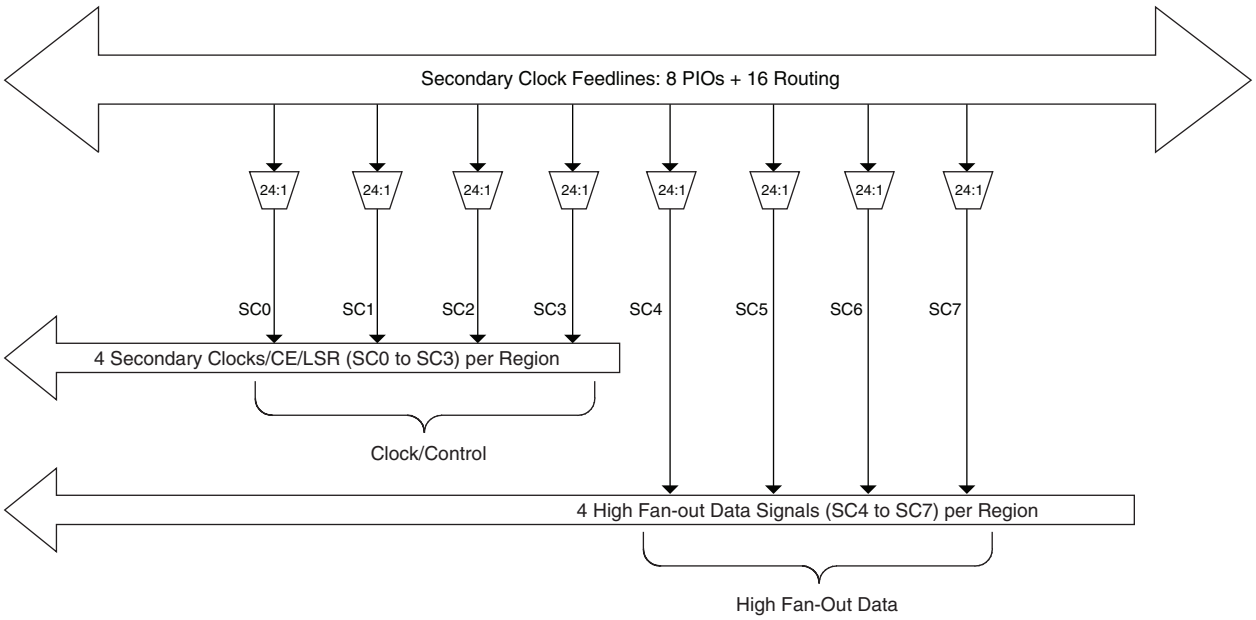

Slice Clock Selection

Figure 2-13 shows the clock selections and Figure 2-14 shows the control selections for Slice 0 through Slice 2. All the primary clocks and the four secondary clocks are routed to this clock selection mux. Other signals, via routing, can be used as clock inputs to the slices. Slice controls are generated from the secondary clocks or other signals connected via routing.

If none of the signals are selected for both clock and control, then the default value of the mux output is 1. Slice 3 does not have any registers; therefore it does not have the clock or control muxes.

Figure 2-13. Slice 0 through Slice 2 Clock Selection

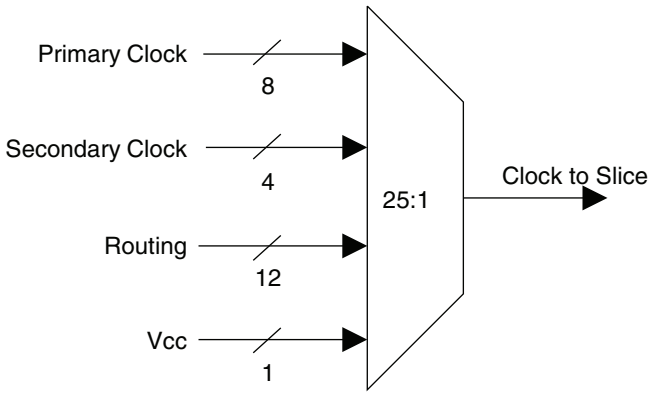

Figure 2-14. Slice 0 through Slice 2 Control Selection

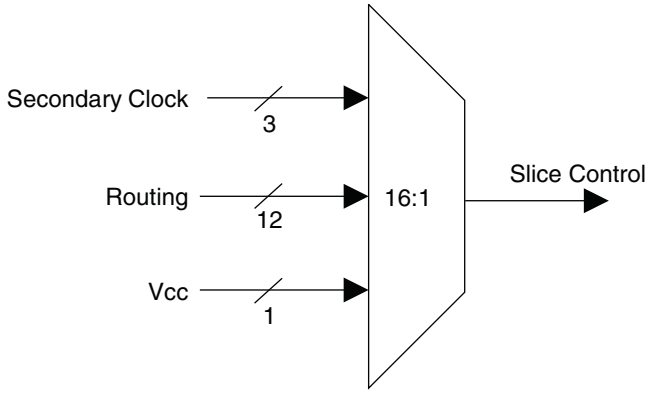

Edge Clock Routing

LA-LatticeXP2 devices have eight high-speed edge clocks that are intended for use with the PIOs in the implementation of high-speed interfaces. Each device has two edge clocks per edge. Figure 2-15 shows the selection muxes for these clocks.

Figure 2-15. Edge Clock Mux Connections

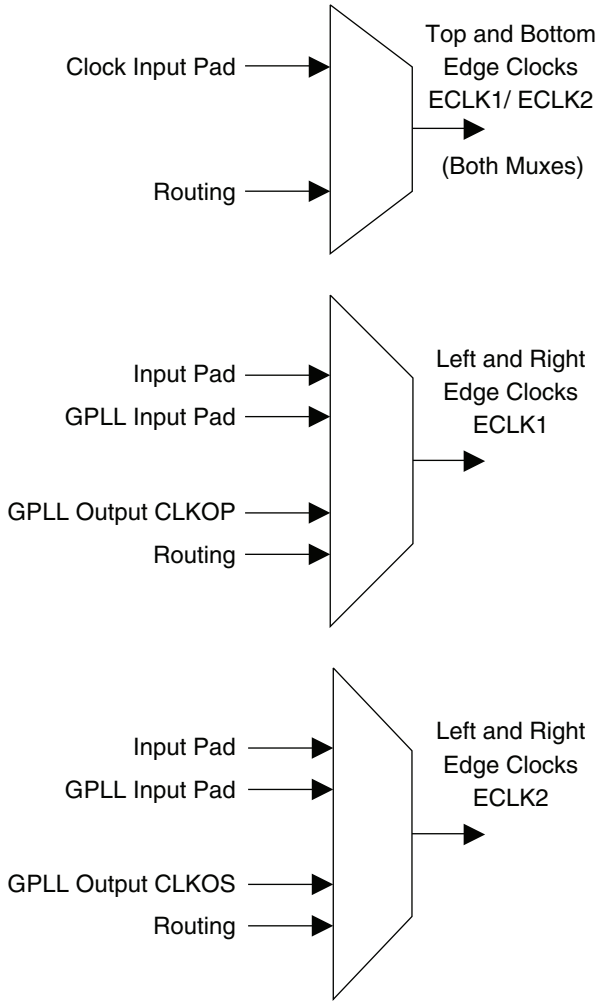

sysMEM Memory

LA-LatticeXP2 devices contains a number of sysMEM Embedded Block RAM (EBR). The EBR consists of 18 Kbit RAM with dedicated input and output registers.

sysMEM Memory Block

The sysMEM block can implement single port, dual port or pseudo dual port memories. Each block can be used in a variety of depths and widths as shown in Table 2-5. FIFOs can be implemented in sysMEM EBR blocks by using support logic with PFUs. The EBR block supports an optional parity bit for each data byte to facilitate parity checking. EBR blocks provide byte-enable support for configurations with18-bit and 36-bit data widths.

Table 2-5. sysMEM Block Con• gurations

Memory Mode	Configurations
Single Port	16,384 x 1 8,192 x 2 4,096 x 4 2,048 x 9 1,024 x 18 512 x 36
True Dual Port	16,384 x 1 8,192 x 2 4,096 x 4 2,048 x 9 1,024 x 18
Pseudo Dual Port	16,384 x 1 8,192 x 2 4,096 x 4 2,048 x 9 1,024 x 18 512 x 36

Bus Size Matching

All of the multi-port memory modes support different widths on each of the ports. The RAM bits are mapped LSB word 0 to MSB word 0, LSB word 1 to MSB word 1, and so on. Although the word size and number of words for each port varies, this mapping scheme applies to each port.

FlashBAK EBR Content Storage

All the EBR memory in the LA-LatticeXP2 is shadowed by Flash memory. Optionally, initialization values for the memory blocks can be defined using the Lattice Diamond design tool. The initialization values are loaded into the Flash memory during device programming and into the SRAM at power up or whenever the device is reconfigured. This feature is ideal for the storage of a variety of information such as look-up tables and microprocessor code. It is also possible to write the current contents of the EBR memory back to Flash memory. This capability is useful for the storage of data such as error codes and calibration information. For additional information on the FlashBAK capability see TN1137, LatticeXP2 Memory Usage Guide.

Figure 2-16. FlashBAK Technology

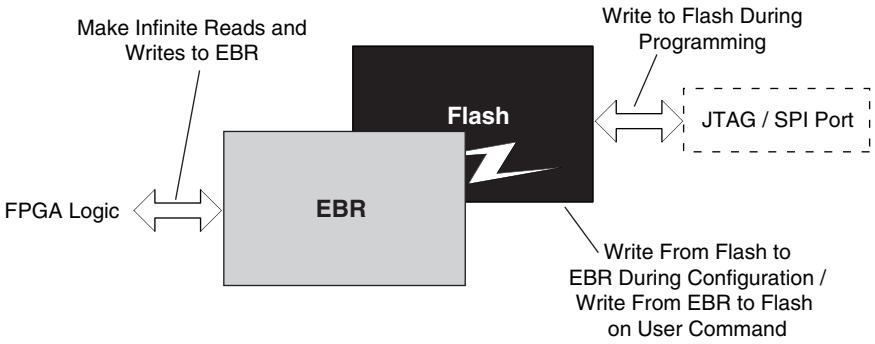

Memory Cascading

Larger and deeper blocks of RAMs can be created using EBR sysMEM Blocks. Typically, the Lattice design tools cascade memory transparently, based on speci•c design inputs.

Single, Dual and Pseudo-Dual Port Modes

In all the sysMEM RAM modes the input data and address for the ports are registered at the input of the memory array. The output data of the memory is optionally registered at the output.

EBR memory supports two forms of write behavior for single port or dual port operation:

1. **Normal** – Data on the output appears only during a read cycle. During a write cycle, the data (at the current address) does not appear on the output. This mode is supported for all data widths.

2. **Write Through** – A copy of the input data appears at the output of the same port during a write cycle. This mode is supported for all data widths.

Memory Core Reset

The memory array in the EBR utilizes latches at the A and B output ports. These latches can be reset asynchronously or synchronously. RSTA and RSTB are local signals, which reset the output latches associated with Port A and Port B respectively. GSRN, the global reset signal, resets both ports. The output data latches and associated resets for both ports are as shown in Figure 2-17.

Figure 2-17. Memory Core Reset

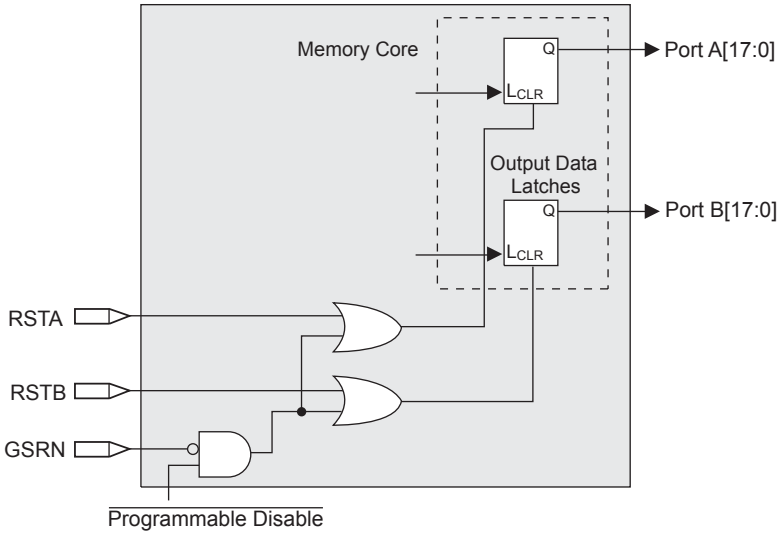

For further information on the sysMEM EBR block, see TN1137, LatticeXP2 Memory Usage Guide.

EBR Asynchronous Reset

EBR asynchronous reset or GSR (if used) can only be applied if all clock enables are low for a clock cycle before the reset is applied and released a clock cycle after the low-to-high transition of the reset signal, as shown in Figure 2-18. The GSR input to the EBR is always asynchronous.

Figure 2-18. EBR Asynchronous Reset (Including GSR) Timing Diagram

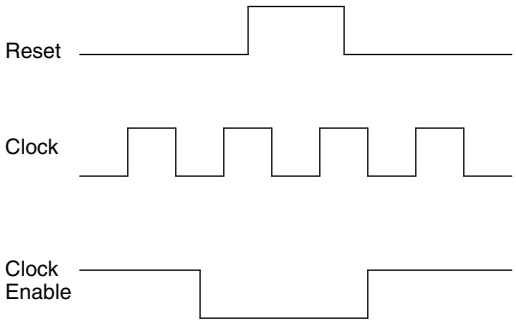

If all clock enables remain enabled, the EBR asynchronous reset or GSR may only be applied and released after the EBR read and write clock inputs are in a steady state condition for a minimum of $1/f_{MAX}$ (EBR clock). The reset release must adhere to the EBR synchronous reset setup time before the next active read or write clock edge.

If an EBR is pre-loaded during configuration, the GSR input must be disabled or the release of the GSR during device Wake Up must occur before the release of the device I/Os becoming active.

These instructions apply to all EBR RAM and ROM implementations.

Note that there are no reset restrictions if the EBR synchronous reset is used and the EBR GSR input is disabled.

sysDSP™ Block

The LA-LatticeXP2 family provides a sysDSP block making it ideally suited for low cost, high performance Digital Signal Processing (DSP) applications. Typical functions used in these applications include Bit Correlators, Fast Fourier Transform (FFT) functions, Finite Impulse Response (FIR) Filter, Reed-Solomon Encoder/Decoder, Turbo Encoder/Decoder and Convolutional Encoder/Decoder. These complex signal processing functions use similar building blocks such as multiply-adders and multiply-accumulators.

sysDSP Block Approach Compare to General DSP

Conventional general-purpose DSP chips typically contain one to four (Multiply and Accumulate) MAC units with •xed data-width multipliers; this leads to limited parallelism and limited throughput. Their throughput is increased by higher clock speeds. The LA-LatticeXP2 family, on the other hand, has many DSP blocks that support different data-widths. This allows the designer to use highly parallel implementations of DSP functions. The designer can optimize the DSP performance vs. area by choosing appropriate levels of parallelism. Figure 2-19 compares the fully serial and the mixed parallel and serial implementations.

Figure 2-19. Comparison of General DSP and LA-LatticeXP2 Approaches

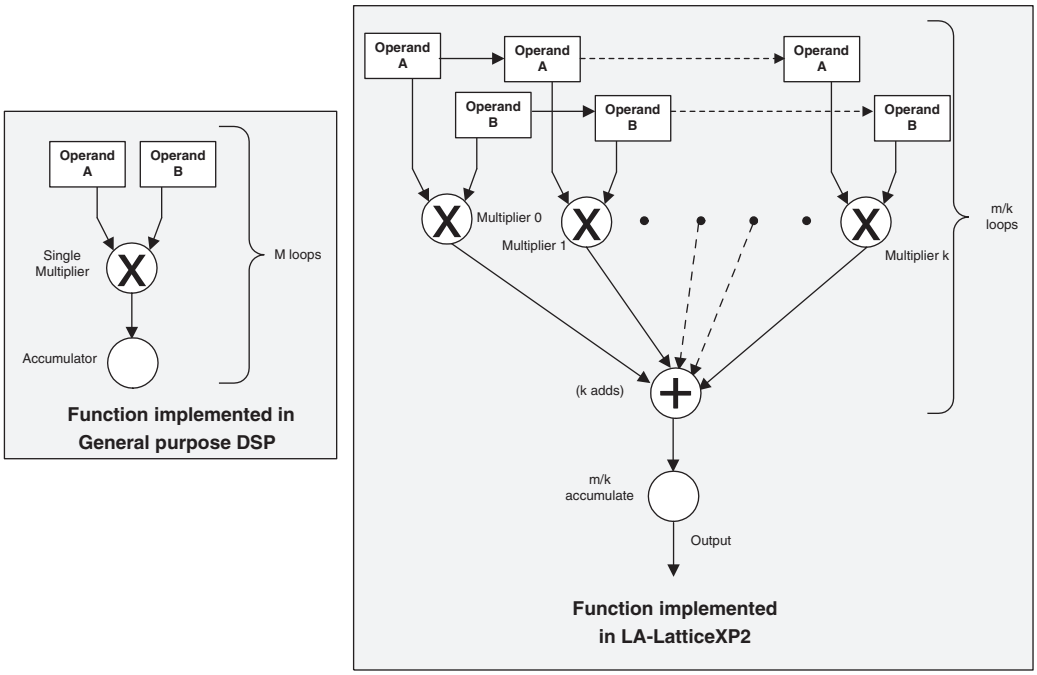

sysDSP Block Capabilities

The sysDSP block in the LA-LatticeXP2 family supports four functional elements in three 9, 18 and 36 data path widths. The user selects a function element for a DSP block and then selects the width and type (signed/unsigned) of its operands. The operands in the LA-LatticeXP2 family sysDSP Blocks can be either signed or unsigned but not

mixed within a function element. Similarly, the operand widths cannot be mixed within a block. DSP elements can be concatenated.

The resources in each sysDSP block can be con•gured to support the following four elements:

- MULT (Multiply)
- MAC (Multiply, Accumulate)
- MULTADDSUB (Multiply, Addition/Subtraction)
- MULTADDSUBSUM (Multiply, Addition/Subtraction, Accumulate)

The number of elements available in each block depends on the width selected from the three available options: x9, x18, and x36. A number of these elements are concatenated for highly parallel implementations of DSP functions. Table 2-6 shows the capabilities of the block.

Table 2-6. Maximum Number of Elements in a Block

Width of Multiply	x9	x18	x36
MULT	8	4	1
MAC	2	2	—
MULTADDSUB	4	2	—
MULTADDSUBSUM	2	1	—

Some options are available in four elements. The input register in all the elements can be directly loaded or can be loaded as shift register from previous operand registers. By selecting ‘dynamic operation’ the following operations are possible:

- In the ‘Signed/Unsigned’ options the operands can be switched between signed and unsigned on every cycle.
- In the ‘Add/Sub’ option the Accumulator can be switched between addition and subtraction on every cycle.
- The loading of operands can switch between parallel and serial operations.

MULT sysDSP Element

This multiplier element implements a multiply with no addition or accumulator nodes. The two operands, A and B, are multiplied and the result is available at the output. The user can enable the input/output and pipeline registers. Figure 2-20 shows the MULT sysDSP element.

Figure 2-20. MULT sysDSP Element

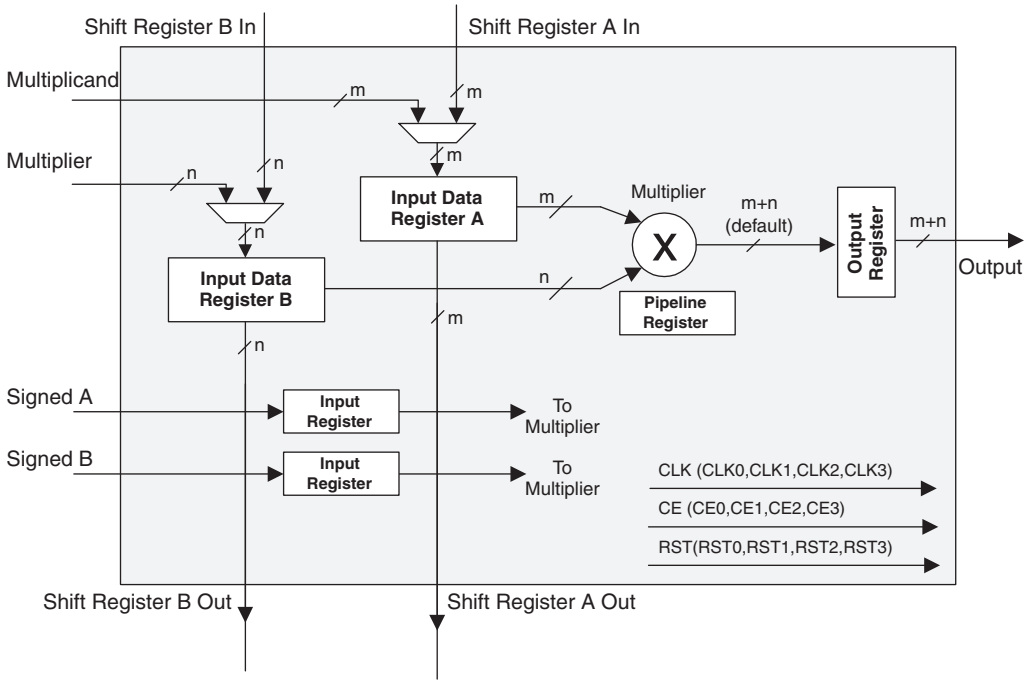

MAC sysDSP Element

In this case, the two operands, A and B, are multiplied and the result is added with the previous accumulated value. This accumulated value is available at the output. The user can enable the input and pipeline registers but the output register is always enabled. The output register is used to store the accumulated value. The Accumulators in the DSP blocks in LA-LatticeXP2 family can be initialized dynamically. A registered overflow signal is also available. The over•ow conditions are provided later in this document. Figure 2-21 shows the MAC sysDSP element.

Figure 2-21. MAC sysDSP

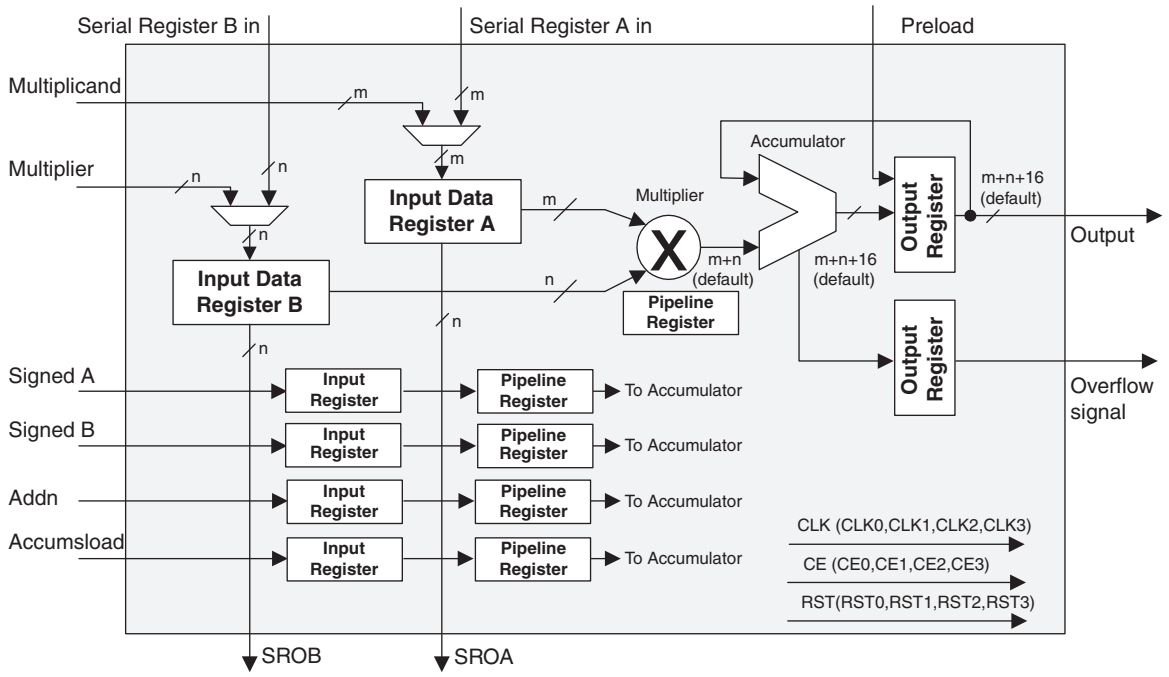

MULTADDSUB sysDSP Element

In this case, the operands A0 and B0 are multiplied and the result is added/subtracted with the result of the multiplier operation of operands A1 and B1. The user can enable the input, output and pipeline registers. Figure 2-22 shows the MULTADDSUB sysDSP element.

Figure 2-22. MULTADDSUB

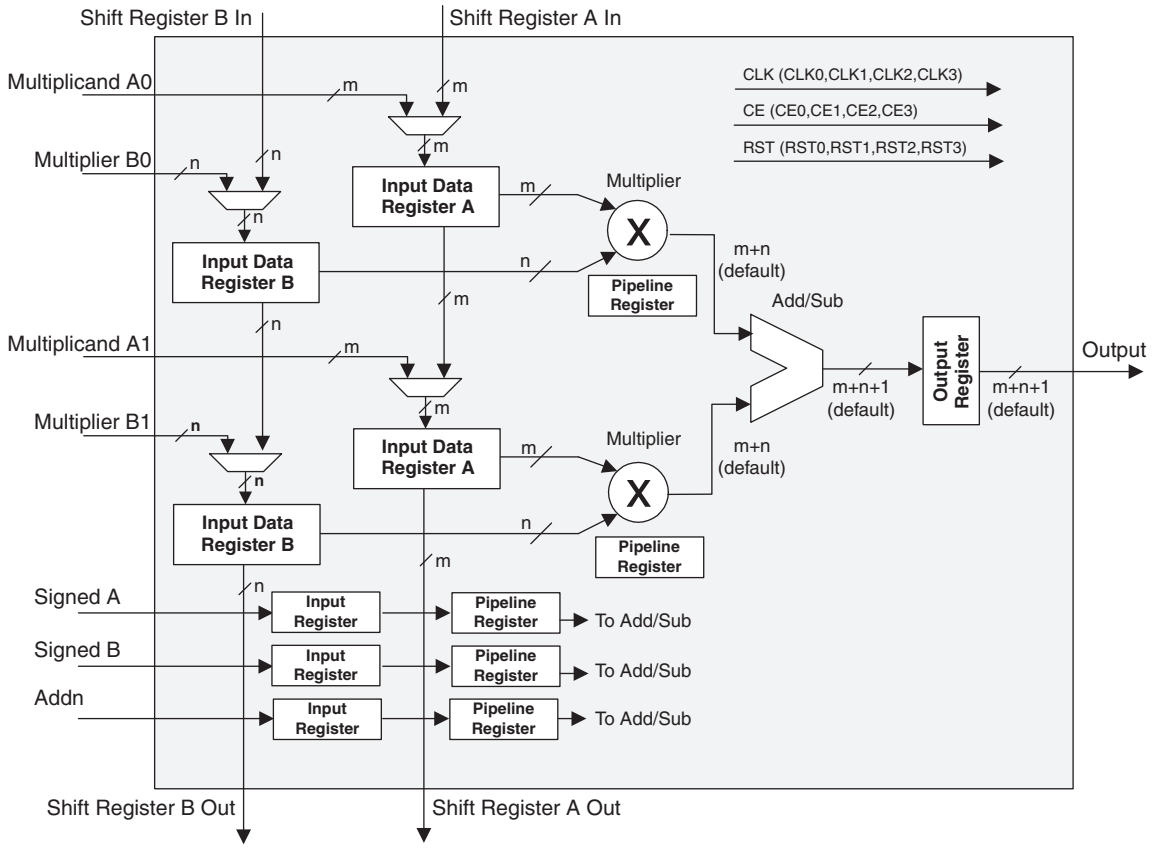

MULTADDSUBSUM sysDSP Element

In this case, the operands A0 and B0 are multiplied and the result is added/subtracted with the result of the multiplier operation of operands A1 and B1. Additionally the operands A2 and B2 are multiplied and the result is added/subtracted with the result of the multiplier operation of operands A3 and B3. The result of both addition/subtraction are added in a summation block. The user can enable the input, output and pipeline registers. Figure 2-23 shows the MULTADDSUBSUM sysDSP element.

Figure 2-23. MULTADDSUBSUM

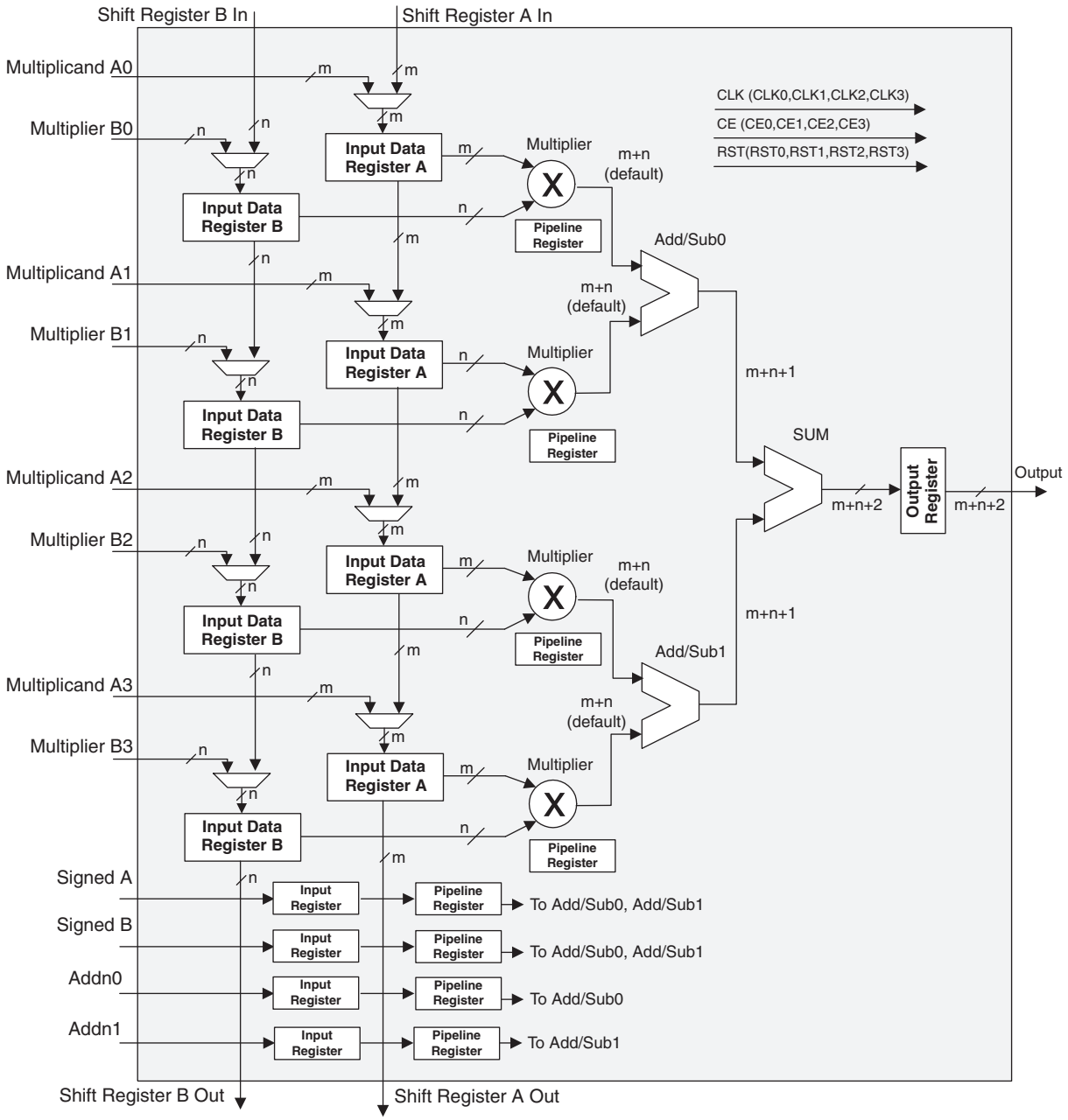

Clock, Clock Enable and Reset Resources

Global Clock, Clock Enable (CE) and Reset (RST) signals from routing are available to every DSP block. From four clock sources (CLK0, CLK1, CLK2, CLK3) one clock is selected for each input register, pipeline register and output

register. Similarly, CE and RST are selected from their four respective sources (CE0, CE1, CE2, CE3 and RST0, RST1, RST2, RST3) at each input register, pipeline register and output register.

Signed and Unsigned with Different Widths

The DSP block supports other widths, in addition to x9, x18 and x36 widths, of signed and unsigned multipliers. For unsigned operands, unused upper data bits should be •lled to create a valid x9, x18 or x36 operand. For signed two's complement operands, sign extension of the most signi•cant bit should be performed until x9, x18 or x36 width is reached. Table 2-7 provides an example of this.

Table 2-7. Sign Extension Example

Number	Unsigned	Unsigned 9-bit	Unsigned 18-bit	Signed	Two's Complement Signed 9 Bits	Two's Complement Signed 18 Bits
+5	0101	000000101	000000000000000101	0101	000000101	000000000000000101
–6	N/A	N/A	N/A	1010	111111010	111111111111111010

OVERFLOW Flag from MAC

The sysDSP block provides an overflow output to indicate that the accumulator has overflowed. "Roll-over" occurs and an overflow signal is indicated when any of the following is true: two unsigned numbers are added and the result is a smaller number than the accumulator, two positive numbers are added with a negative sum or two negative numbers are added with a positive sum. Note that when overflow occurs the overflow flag is present for only one cycle. By counting these overflow pulses in FPGA logic, larger accumulators can be constructed. The conditions for the overflow signal for signed and unsigned operands are listed in Figure 2-24.

Figure 2-24. Accumulator Over• ow/Under• ow

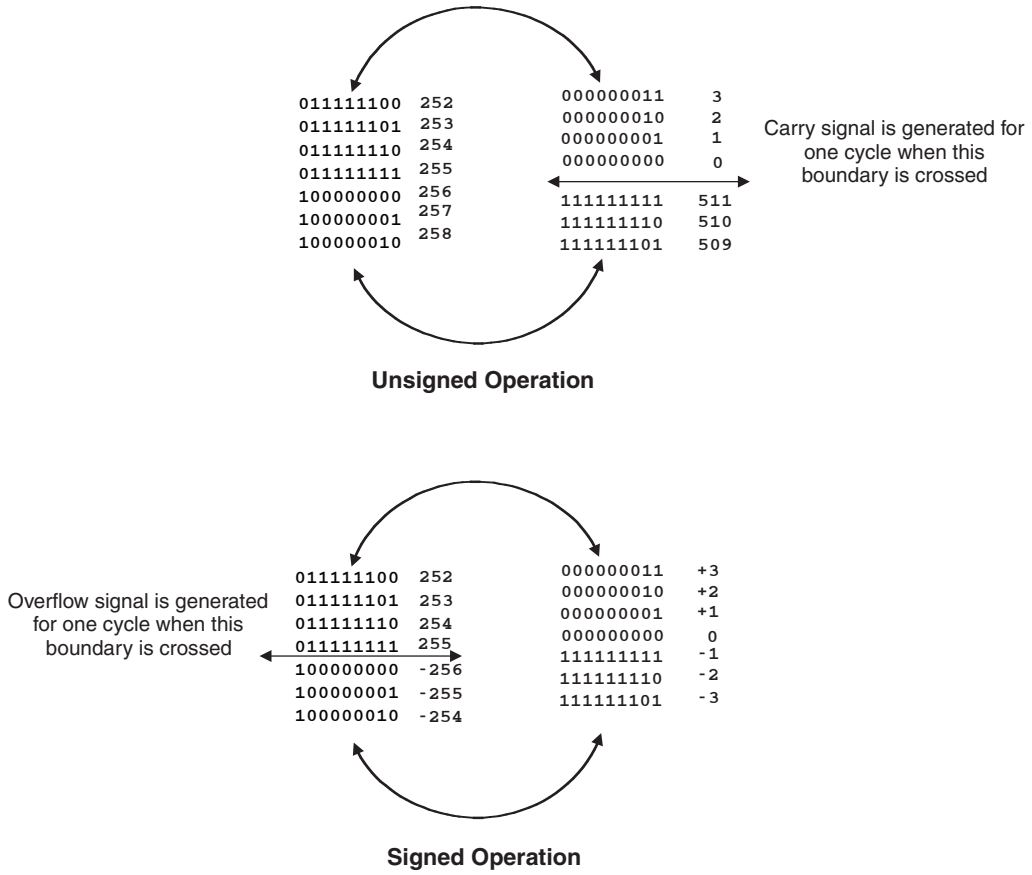

IPexpress™

The user can access the sysDSP block via the Lattice IPexpress tool, which provides the option to configure each DSP module (or group of modules), or by direct HDL instantiation. In addition, Lattice has partnered with The MathWorks® to support instantiation in the Simulink® tool, a graphical simulation environment. Simulink works with Diamond to dramatically shorten the DSP design cycle in Lattice FPGAs.

Optimized DSP Functions

Lattice provides a library of optimized DSP IP functions. Some of the IP cores planned for the LA-LatticeXP2 DSP include the Bit Correlator, FFT functions, FIR Filter, Reed-Solomon Encoder/Decoder, Turbo Encoder/Decoder and Convolutional Encoder/Decoder. Please contact Lattice to obtain the latest list of available DSP IP cores.

Resources Available in the LA-LatticeXP2 Family

Table 2-8 shows the maximum number of multipliers for each member of the LA-LatticeXP2 family. Table 2-9 shows the maximum available EBR RAM Blocks and Serial TAG Memory bits in each LA-LatticeXP2 device. EBR blocks, together with Distributed RAM can be used to store variables locally for fast DSP operations.

Table 2-8. Maximum Number of DSP Blocks in the LA-LatticeXP2 Family

Device	DSP Block	9 x 9 Multiplier	18 x 18 Multiplier	36 x 36 Multiplier
LA-XP2-5	3	24	12	3
LA-XP2-8	4	32	16	4
LA-XP2-17	5	40	20	5

Table 2-9. Embedded SRAM/TAG Memory in the LA-LatticeXP2 Family

Device	EBR SRAM Block	Total EBR SRAM (kbits)	TAG Memory (Bits)
LA-XP2-5	9	166	632
LA-XP2-8	12	221	768
LA-XP2-17	15	276	2184

LA-LatticeXP2 DSP Performance

Table 2-10 lists the maximum performance in Millions of MAC (MMAC) operations per second for each member of the LA-LatticeXP2 family.

Table 2-10. DSP Performance

Device	DSP Block	DSP Performance MMAC
LA-XP2-5	3	3,900
LA-XP2-8	4	5,200
LA-XP2-17	5	6,500

For further information on the sysDSP block, see TN1140, LatticeXP2 sysDSP Usage Guide.

Programmable I/O Cells (PIC)

Each PIC contains two PIOs connected to their respective sysIO buffers as shown in Figure 2-25. The PIO Block supplies the output data (DO) and the tri-state control signal (TO) to the sysIO buffer and receives input from the buffer. Table 2-11 provides the PIO signal list.

Figure 2-25. PIC Diagram

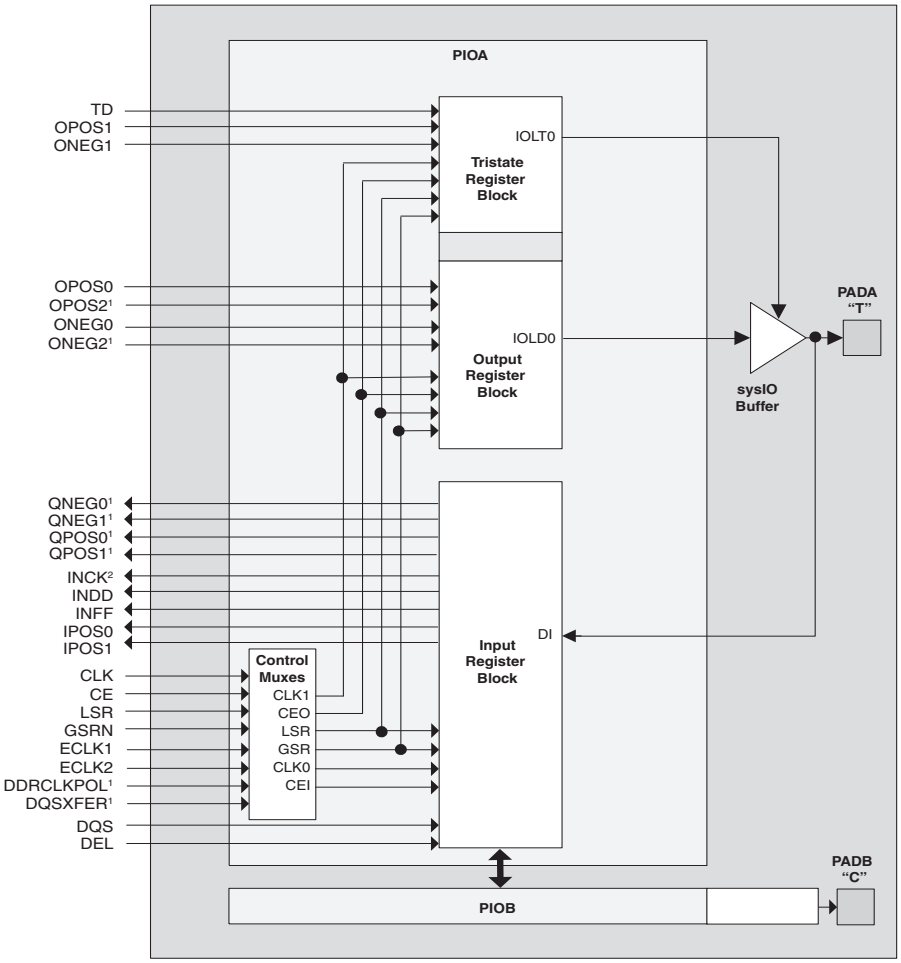

1. Signals are available on left/right/bottom edges only.
2. Selected blocks.

Two adjacent PIOs can be joined to provide a differential I/O pair (labeled as “T” and “C”) as shown in Figure 2-25. The PAD Labels “T” and “C” distinguish the two PIOs. Approximately 50% of the PIO pairs on the left and right edges of the device can be configured as true LVDS outputs. All I/O pairs can operate as inputs.

Table 2-11. PIO Signal List

Name	Type	Description
CE	Control from the core	Clock enables for input and output block flip-flops
CLK	Control from the core	System clocks for input and output blocks
ECLK1, ECLK2	Control from the core	Fast edge clocks
LSR	Control from the core	Local Set/Reset
GSRN	Control from routing	Global Set/Reset (active low)
INCK[2]	Input to the core	Input to Primary Clock Network or PLL reference inputs
DQS	Input to PIO	DQS signal from logic (routing) to PIO
INDD	Input to the core	Unregistered data input to core
INFF	Input to the core	Registered input on positive edge of the clock (CLK0)
IPOS0, IPOS1	Input to the core	Double data rate registered inputs to the core
QPOS0[1], QPOS1[1]	Input to the core	Gearbox pipelined inputs to the core
QNEG0[1], QNEG1[1]	Input to the core	Gearbox pipelined inputs to the core
OPOS0, ONEG0, OPOS2, ONEG2	Output data from the core	Output signals from the core for SDR and DDR operation
OPOS1 ONEG1	Tristate control from the core	Signals to Tristate Register block for DDR operation
DEL[3:0]	Control from the core	Dynamic input delay control bits
TD	Tristate control from the core	Tristate signal from the core used in SDR operation
DDRCLKPOL	Control from clock polarity bus	Controls the polarity of the clock (CLK0) that feed the DDR input block
DQSXFER	Control from core	Controls signal to the Output block

1. Signals available on left/right/bottom only.
2. Selected I/O.

PIO

The PIO contains four blocks: an input register block, output register block, tristate register block and a control logic block. These blocks contain registers for operating in a variety of modes along with necessary clock and selection logic.

Input Register Block

The input register blocks for PIOs contain delay elements and registers that can be used to condition high-speed interface signals, such as DDR memory interfaces and source synchronous interfaces, before they are passed to the device core. Figure 2-26 shows the diagram of the input register block.

Input signals are fed from the sysIO buffer to the input register block (as signal DI). If desired, the input signal can bypass the register and delay elements and be used directly as a combinatorial signal (INDD), a clock (INCK) and, in selected blocks, the input to the DQS delay block. If an input delay is desired, designers can select either a fixed delay or a dynamic delay DEL[3:0]. The delay, if selected, reduces input register hold time requirements when using a global clock.

The input block allows three modes of operation. In the Single Data Rate (SDR) mode, the data is registered, by one of the registers in the SDR Sync register block, with the system clock. In DDR mode two registers are used to sample the data on the positive and negative edges of the DQS signal which creates two data streams, D0 and D2. D0 and D2 are synchronized with the system clock before entering the core. Further information on this topic can be found in the DDR Memory Support section of this data sheet.

By combining input blocks of the complementary PIOs and sharing registers from output blocks, a gearbox function can be implemented, that takes a double data rate signal applied to PIOA and converts it as four data streams, IPOS0A, IPOS1A, IPOS0B and IPOS1B. Figure 2-26 shows the diagram using this gearbox function. For more information on this topic, see TN1138, LatticeXP2 High Speed I/O Interface.

The signal DDRCLKPOL controls the polarity of the clock used in the synchronization registers. It ensures adequate timing when data is transferred from the DQS to system clock domain. For further discussion on this topic, see the DDR Memory section of this data sheet.

Figure 2-26. Input Register Block

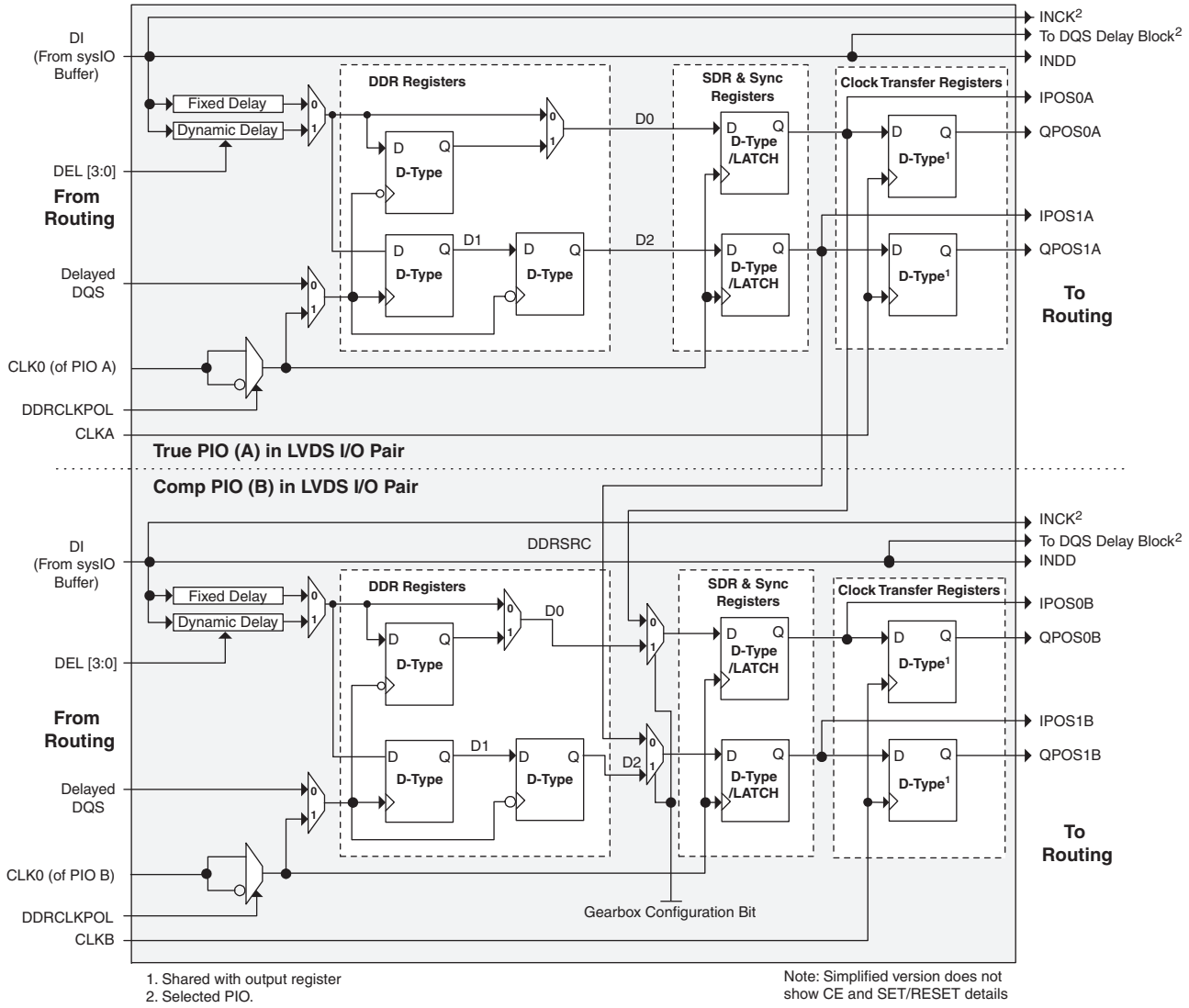

1. Shared with output register
2. Selected PIO.

Note: Simplified version does not show CE and SET/RESET details

Output Register Block

The output register block provides the ability to register signals from the core of the device before they are passed to the sysIO buffers. The blocks on the PIOs on the left, right and bottom contain registers for SDR operation that are combined with an additional latch for DDR operation. Figure 2-27 shows the diagram of the Output Register Block for PIOs.

In SDR mode, ONEG0 feeds one of the flip-flops that then feeds the output. The flip-flop can be configured as a D-type or latch. In DDR mode, ONEG0 and OPOS0 are fed into registers on the positive edge of the clock. At the next clock cycle the registered OPOS0 is latched. A multiplexer running off the same clock cycle selects the correct register to feed the output (D0).

By combining output blocks of the complementary PIOs and sharing some registers from input blocks, a gearbox function can be implemented, to take four data streams ONEG0A, ONEG1A, ONEG1B and ONEG1B. Figure 2-27

shows the diagram using this gearbox function. For more information on this topic, see TN1138, LatticeXP2 High Speed I/O Interface.

Figure 2-27. Output and Tristate Block

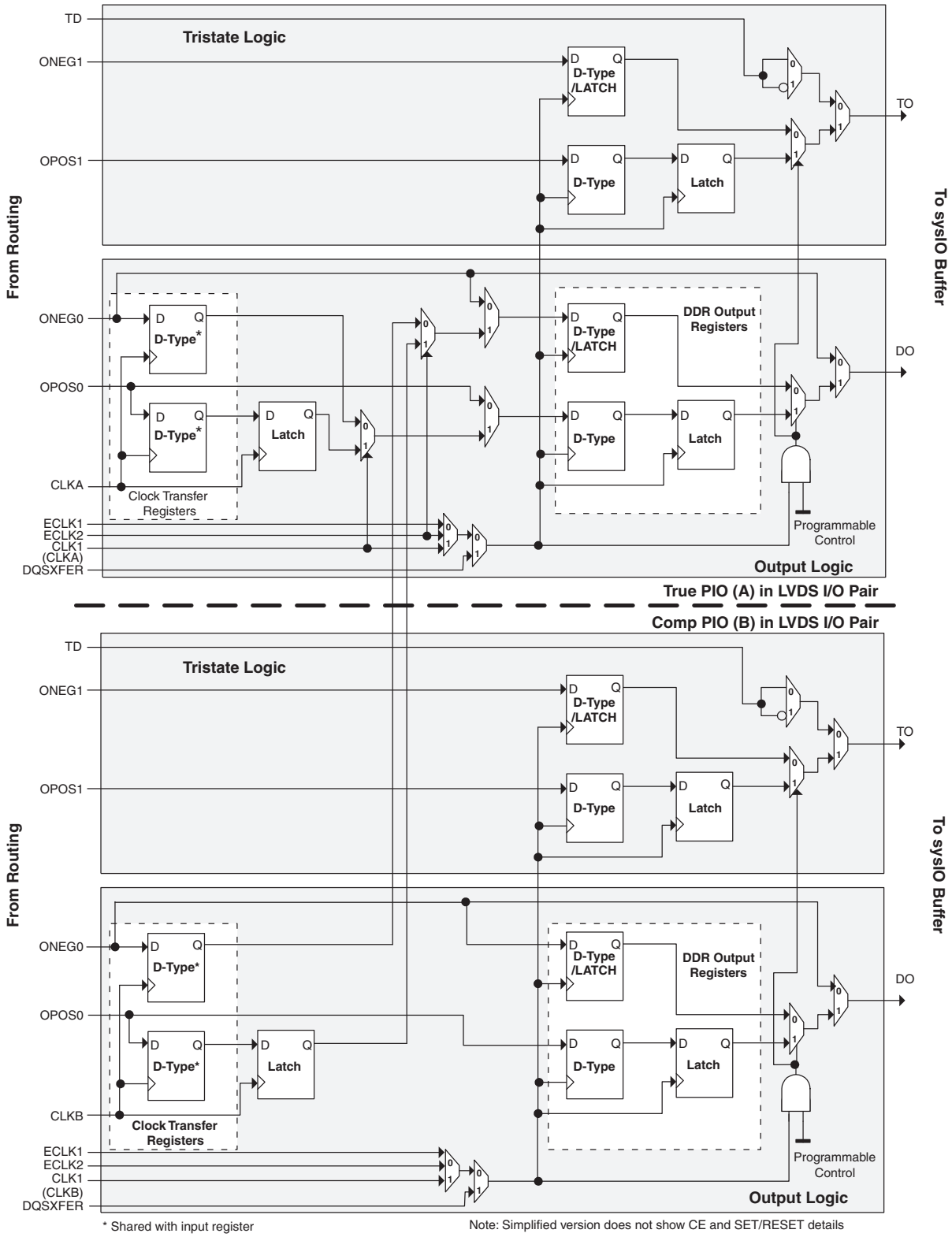

Tristate Register Block

The tristate register block provides the ability to register tri-state control signals from the core of the device before they are passed to the sysIO buffers. The block contains a register for SDR operation and an additional latch for DDR operation. Figure 2-27 shows the Tristate Register Block with the Output Block

In SDR mode, ONEG1 feeds one of the flip-flops that then feeds the output. The flip-flop can be configured as D-type or latch. In DDR mode, ONEG1 and OPOS1 are fed into registers on the positive edge of the clock. Then in the next clock the registered OPOS1 is latched. A multiplexer running off the same clock cycle selects the correct register for feeding to the output (D0).

Control Logic Block

The control logic block allows the selection and modification of control signals for use in the PIO block. A clock signal is selected from general purpose routing, ECLK1, ECLK2 or a DQS signal (from the programmable DQS pin) and is provided to the input register block. The clock can optionally be inverted.

DDR Memory Support

PICs have additional circuitry to allow implementation of high speed source synchronous and DDR memory interfaces.

PICs have registered elements that support DDR memory interfaces. Interfaces on the left and right edges are designed for DDR memories that support 16 bits of data, whereas interfaces on the top and bottom are designed for memories that support 18 bits of data. One of every 16 PIOs on the left and right and one of every 18 PIOs on the top and bottom contain delay elements to facilitate the generation of DQS signals. The DQS signals feed the DQS buses which span the set of 16 or 18 PIOs. Figure 2-28 and Figure 2-29 show the DQS pin assignments in each set of PIOs.

The exact DQS pins are shown in a dual function in the Logic Signal Connections table in this data sheet. Additional detail is provided in the Signal Descriptions table. The DQS signal from the bus is used to strobe the DDR data from the memory into input register blocks. For additional information on using DDR memory support, see TN1138, LatticeXP2 High Speed I/O Interface.

Figure 2-28. DQS Input Routing (Left and Right)

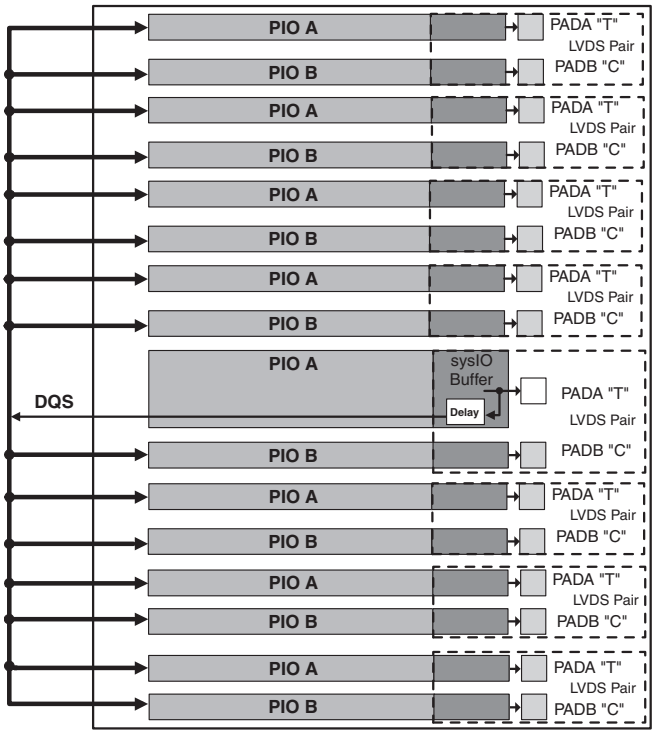

Figure 2-29. DQS Input Routing (Top and Bottom)

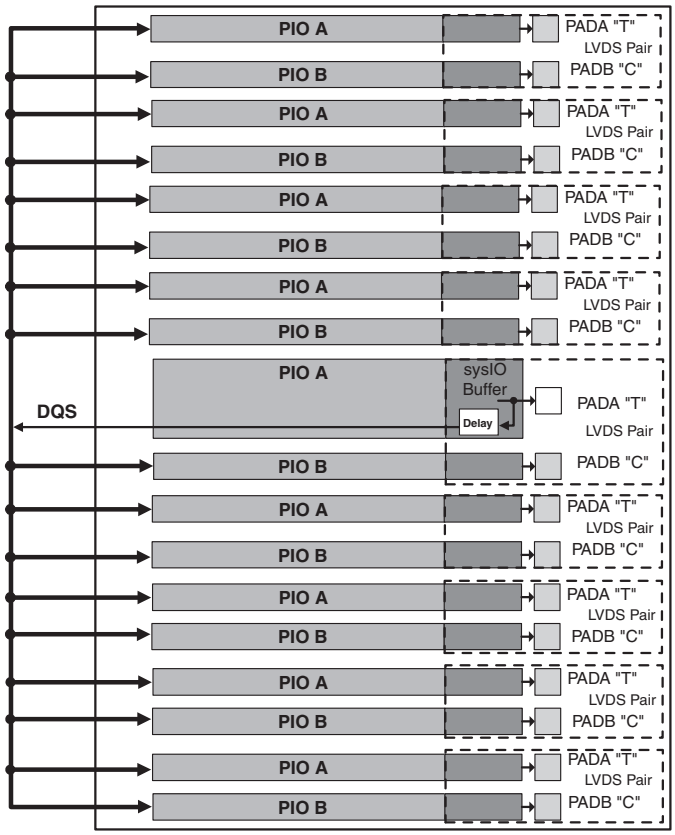

DLL Calibrated DQS Delay Block

Source synchronous interfaces generally require the input clock to be adjusted in order to correctly capture data at the input register. For most interfaces a PLL is used for this adjustment. However, in DDR memories the clock, referred to as DQS, is not free-running, and this approach cannot be used. The DQS Delay block provides the required clock alignment for DDR memory interfaces.

The DQS signal (selected PIOs only, as shown in Figure 2-30) feeds from the PAD through a DQS delay element to a dedicated DQS routing resource. The DQS signal also feeds polarity control logic which controls the polarity of the clock to the sync registers in the input register blocks. Figure 2-30 and Figure 2-31 show how the DQS transition signals are routed to the PIOs.

The temperature, voltage and process variations of the DQS delay block are compensated by a set of 6-bit bus calibration signals from two dedicated DLLs (DDR_DLL) on opposite sides of the device. Each DLL compensates DQS delays in its half of the device as shown in Figure 2-30. The DLL loop is compensated for temperature, voltage and process variations by the system clock and feedback loop.

Figure 2-30. Edge Clock, DLL Calibration and DQS Local Bus Distribution

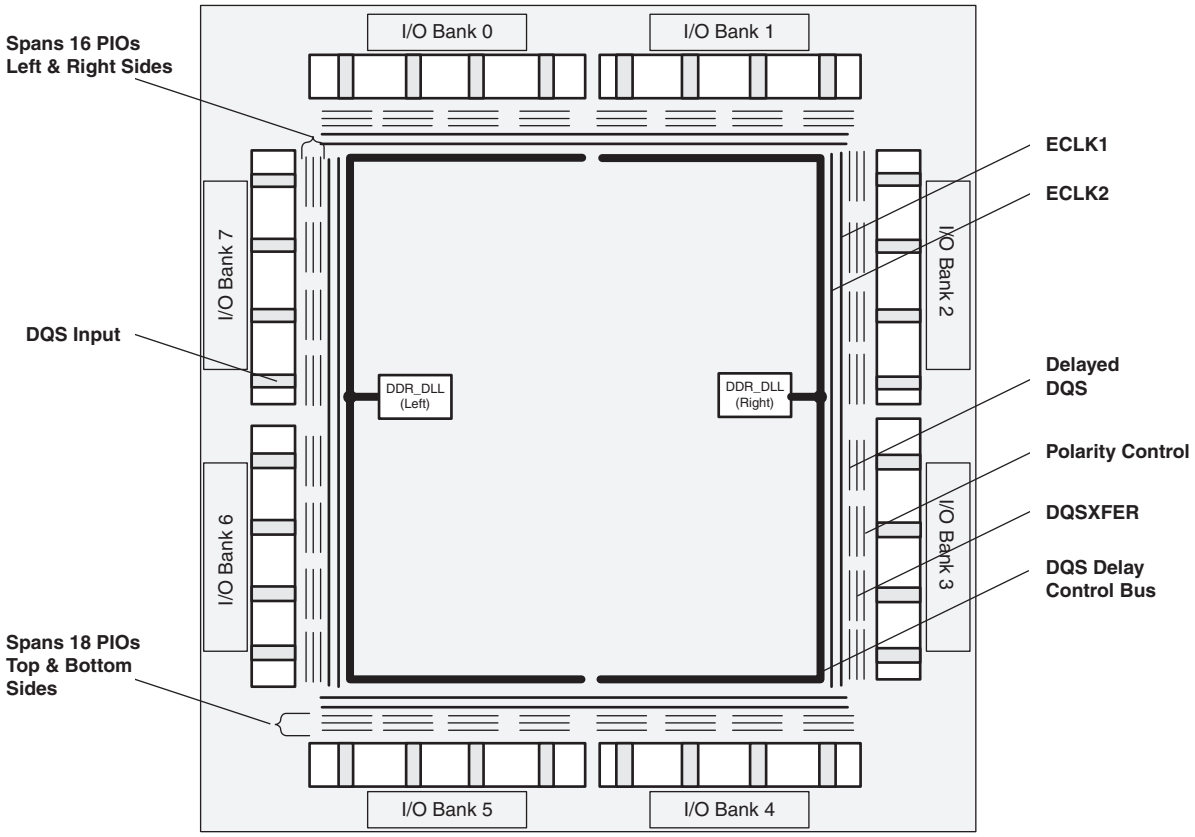

Figure 2-31. DQS Local Bus

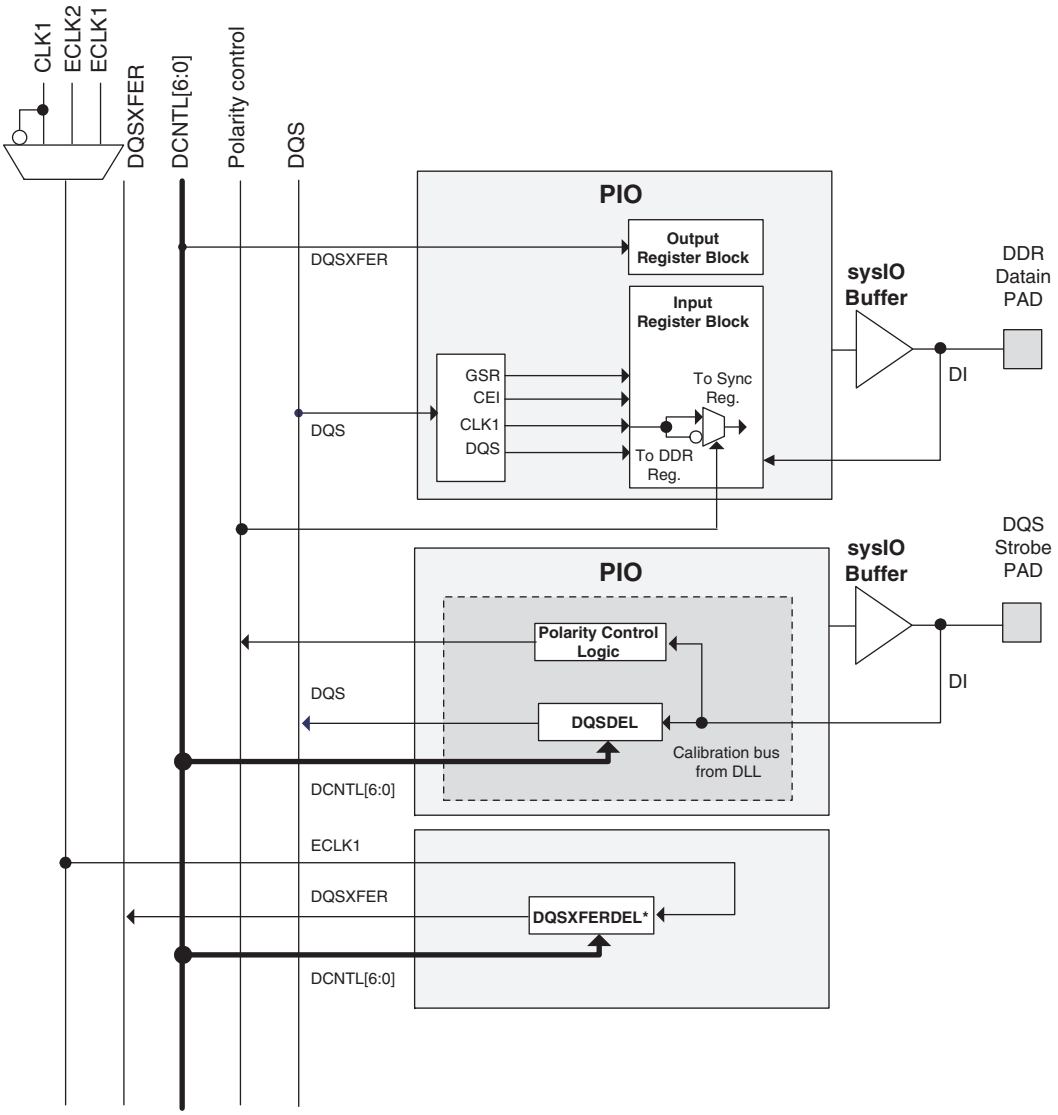

*DQSXFERDEL shifts ECLK1 by 90% and is not associated with a particular PIO.

Polarity Control Logic

In a typical DDR memory interface design, the phase relationship between the incoming delayed DQS strobe and the internal system clock (during the READ cycle) is unknown. The LA-LatticeXP2 family contains dedicated circuits to transfer data between these domains. To prevent set-up and hold violations, at the domain transfer between DQS (delayed) and the system clock, a clock polarity selector is used. This changes the edge on which the data is registered in the synchronizing registers in the input register block and requires evaluation at the start of each READ cycle for the correct clock polarity.

Prior to the READ operation in DDR memories, DQS is in tristate (pulled by termination). The DDR memory device drives DQS low at the start of the preamble state. A dedicated circuit detects this transition. This signal is used to control the polarity of the clock to the synchronizing registers.

DQSXFER

LA-LatticeXP2 devices provide a DQSXFER signal to the output buffer to assist it in data transfer to DDR memories that require DQS strobe be shifted 90º. This shifted DQS strobe is generated by the DQSDEL block. The DQSXFER signal runs the span of the data bus.

sysIO Buffer

Each I/O is associated with a •exible buffer referred to as a sysIO buffer. These buffers are arranged around the periphery of the device in groups referred to as banks. The sysIO buffers allow users to implement the wide variety of standards that are found in today's systems including LVCMOS, SSTL, HSTL, LVDS and LVPECL.

sysIO Buffer Banks

LA-LatticeXP2 devices have eight sysIO buffer banks for user I/Os arranged two per side. Each bank is capable of supporting multiple I/O standards. Each sysIO bank has its own I/O supply voltage (V_{CCIO}). In addition, each bank has voltage references, V_{REF1} and V_{REF2}, that allow it to be completely independent from the others. Figure 2-32 shows the eight banks and their associated supplies.

In LA-LatticeXP2 devices, single-ended output buffers and ratioed input buffers (LVTTL, LVCMOS and PCI) are powered using V_{CCIO}. LVTTL, LVCMOS33, LVCMOS25 and LVCMOS12 can also be set as fixed threshold inputs independent of V_{CCIO}.

Each bank can support up to two separate V_{REF} voltages, V_{REF1} and V_{REF2}, that set the threshold for the referenced input buffers. Some dedicated I/O pins in a bank can be configured to be a reference voltage supply pin. Each I/O is individually configurable based on the bank's supply and reference voltages.

Figure 2-32. LA-LatticeXP2 Banks

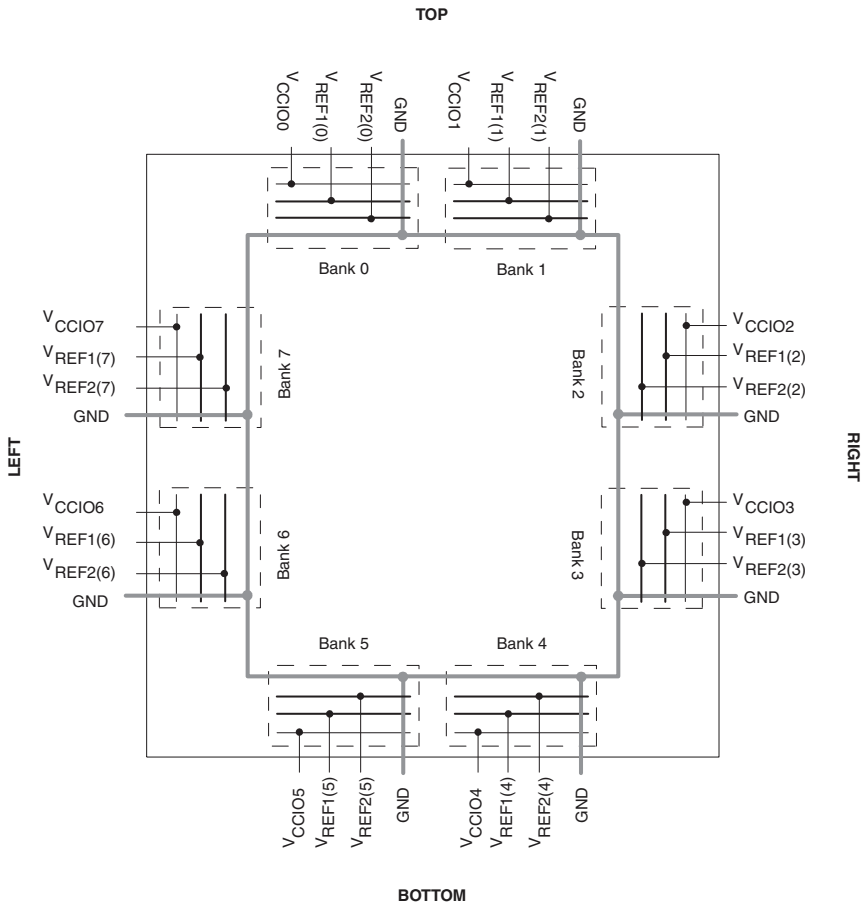

LA-LatticeXP2 devices contain two types of sysIO buffer pairs.

1. **Top and Bottom (Banks 0, 1, 4 and 5) sysIO Buffer Pairs (Single-Ended Outputs Only)**
   The sysIO buffer pairs in the top banks of the device consist of two single-ended output drivers and two sets of single-ended input buffers (both ratioed and referenced). One of the referenced input buffers can also be configured as a differential input.

   The two pads in the pair are described as “true” and “comp”, where the true pad is associated with the positive side of the differential input buffer and the comp (complementary) pad is associated with the negative side of the differential input buffer.

   Only the I/Os on the top and bottom banks have programmable PCI clamps.

2. **Left and Right (Banks 2, 3, 6 and 7) sysIO Buffer Pairs (50% Differential and 100% Single-Ended Outputs)**
   The sysIO buffer pairs in the left and right banks of the device consist of two single-ended output drivers, two sets of single-ended input buffers (both ratioed and referenced) and one differential output driver. One of the referenced input buffers can also be configured as a differential input.

   The two pads in the pair are described as “true” and “comp”, where the true pad is associated with the positive side of the differential I/O, and the comp pad is associated with the negative side of the differential I/O.

   LVDS differential output drivers are available on 50% of the buffer pairs on the left and right banks.

Typical sysIO I/O Behavior During Power-up

The internal power-on-reset (POR) signal is deactivated when V_{CC} and V_{CCAUX} have reached satisfactory levels. After the POR signal is deactivated, the FPGA core logic becomes active. It is the user’s responsibility to ensure that all other V_{CCIO} banks are active with valid input logic levels to properly control the output logic states of all the I/O banks that are critical to the application. During power up and before the FPGA core logic becomes active, all user I/Os will be high-impedance with weak pull-up. Please refer to TN1136, LatticeXP2 sysIO Usage Guide for additional information.

The V_{CC} and V_{CCAUX} supply the power to the FPGA core fabric, whereas the V_{CCIO} supplies power to the I/O buffers. In order to simplify system design while providing consistent and predictable I/O behavior, it is recommended that the I/O buffers be powered-up prior to the FPGA core fabric. V_{CCIO} supplies should be powered-up before or together with the V_{CC} and V_{CCAUX} supplies.

Supported sysIO Standards

The LA-LatticeXP2 sysIO buffer supports both single-ended and differential standards. Single-ended standards can be further subdivided into LVCMOS, LVTTL and other standards. The buffers support the LVTTL, LVCMOS 1.2 V, 1.5 V, 1.8 V, 2.5 V and 3.3 V standards. In the LVCMOS and LVTTL modes, the buffer has individual configuration options for drive strength, bus maintenance (weak pull-up, weak pull-down, or a bus-keeper latch) and open drain. Other single-ended standards supported include SSTL and HSTL. Differential standards supported include LVDS, MLVDS, BLVDS, LVPECL, RSDS, differential SSTL and differential HSTL. Table 2-12 and Table 2-13 show the I/O standards (together with their supply and reference voltages) supported by LA-LatticeXP2 devices. For further information on utilizing the sysIO buffer to support a variety of standards, see TN1136, LatticeXP2 sysIO Usage Guide.

Table 2-12. Supported Input Standards

Input Standard	V_{REF} (Nom.)	V_{CCIO}[1] (Nom.)
Single Ended Interfaces		
LVTTL	—	—
LVCMOS33	—	—
LVCMOS25	—	—
LVCMOS18	—	1.8
LVCMOS15	—	1.5
LVCMOS12	—	—
PCI33	—	—
HSTL18 Class I, II	0.9	—
HSTL15 Class I	0.75	—
SSTL33 Class I, II	1.5	—
SSTL25 Class I, II	1.25	—
SSTL18 Class I, II	0.9	—
Differential Interfaces		
Differential SSTL18 Class I, II	—	—
Differential SSTL25 Class I, II	—	—
Differential SSTL33 Class I, II	—	—
Differential HSTL15 Class I	—	—
Differential HSTL18 Class I, II	—	—
LVDS, MLVDS, LVPECL, BLVDS, RSDS	—	—

1. When not specified, V_{CCIO} can be set anywhere in the valid operating range (page 3-1).

Table 2-13. Supported Output Standards

Output Standard	Drive	V_{CCIO} (Nom.)
Single-ended Interfaces		
LVTTL	4 mA, 8 mA, 12 mA, 16 mA, 20 mA	3.3
LVCMOS33	4 mA, 8 mA, 12 mA 16 mA, 20 mA	3.3
LVCMOS25	4 mA, 8 mA, 12 mA, 16 mA, 20 mA	2.5
LVCMOS18	4 mA, 8 mA, 12 mA, 16 mA	1.8
LVCMOS15	4 mA, 8 mA	1.5
LVCMOS12	2 mA, 6 mA	1.2
LVCMOS33, Open Drain	4 mA, 8 mA, 12 mA 16 mA, 20 mA	—
LVCMOS25, Open Drain	4 mA, 8 mA, 12 mA 16 mA, 20 mA	—
LVCMOS18, Open Drain	4 mA, 8 mA, 12 mA 16 mA	—
LVCMOS15, Open Drain	4mA, 8mA	—
LVCMOS12, Open Drain	2mA, 6mA	—
PCI33	N/A	3.3
HSTL18 Class I, II	N/A	1.8
HSTL15 Class I	N/A	1.5
SSTL33 Class I, II	N/A	3.3
SSTL25 Class I, II	N/A	2.5
SSTL18 Class I, II	N/A	1.8
Differential Interfaces		
Differential SSTL33, Class I, II	N/A	3.3
Differential SSTL25, Class I, II	N/A	2.5
Differential SSTL18, Class I, II	N/A	1.8
Differential HSTL18, Class I, II	N/A	1.8
Differential HSTL15, Class I	N/A	1.5
LVDS[1, 2]	N/A	2.5
MLVDS[1]	N/A	2.5
BLVDS[1]	N/A	2.5
LVPECL[1]	N/A	3.3
RSDS[1]	N/A	2.5
LVCMOS33D[1]	4 mA, 8 mA, 12 mA, 16 mA, 20 mA	3.3

1. Emulated with external resistors. For more detail, see TN1138, LatticeXP2 High Speed I/O Interface.
2. On the left and right edges, LVDS outputs are supported with a dedicated differential output driver on 50% of the I/Os. This solution does not require external resistors at the driver.

Hot Socketing

LA-LatticeXP2 devices have been carefully designed to ensure predictable behavior during power-up and power-down. Power supplies can be sequenced in any order. During power-up and power-down sequences, the I/Os remain in tri-state until the power supply voltage is high enough to ensure reliable operation. In addition, leakage into I/O pins is controlled to within specified limits. This allows for easy integration with the rest of the system. These capabilities make the LA-LatticeXP2 ideal for many multiple power supply and hot-swap applications.

IEEE 1149.1-Compliant Boundary Scan Testability

All LA-LatticeXP2 devices have boundary scan cells that are accessed through an IEEE 1149.1 compliant Test Access Port (TAP). This allows functional testing of the circuit board, on which the device is mounted, through a serial scan path that can access all critical logic nodes. Internal registers are linked internally, allowing test data to

be shifted in and loaded directly onto test nodes, or test data to be captured and shifted out for veri•cation. The test access port consists of dedicated I/Os: TDI, TDO, TCK and TMS. The test access port has its own supply voltage V_{CCJ} and can operate with LVCMOS3.3, 2.5, 1.8, 1.5 and 1.2 standards. For more information, see TN1141, LatticeXP2 sysCONFIG Usage Guide.

flexiFLASH Device Configuration

The LA-LatticeXP2 devices combine Flash and SRAM on a single chip to provide users with flexibility in device programming and configuration. Figure 2-33 provides an overview of the arrangement of Flash and SRAM configuration cells within the device. The remainder of this section provides an overview of these capabilities. See TN1141, LatticeXP2 sysCONFIG Usage Guide for a more detailed description.

Figure 2-33. Overview of Flash and SRAM Configuration Cells Within LA-LatticeXP2 Devices

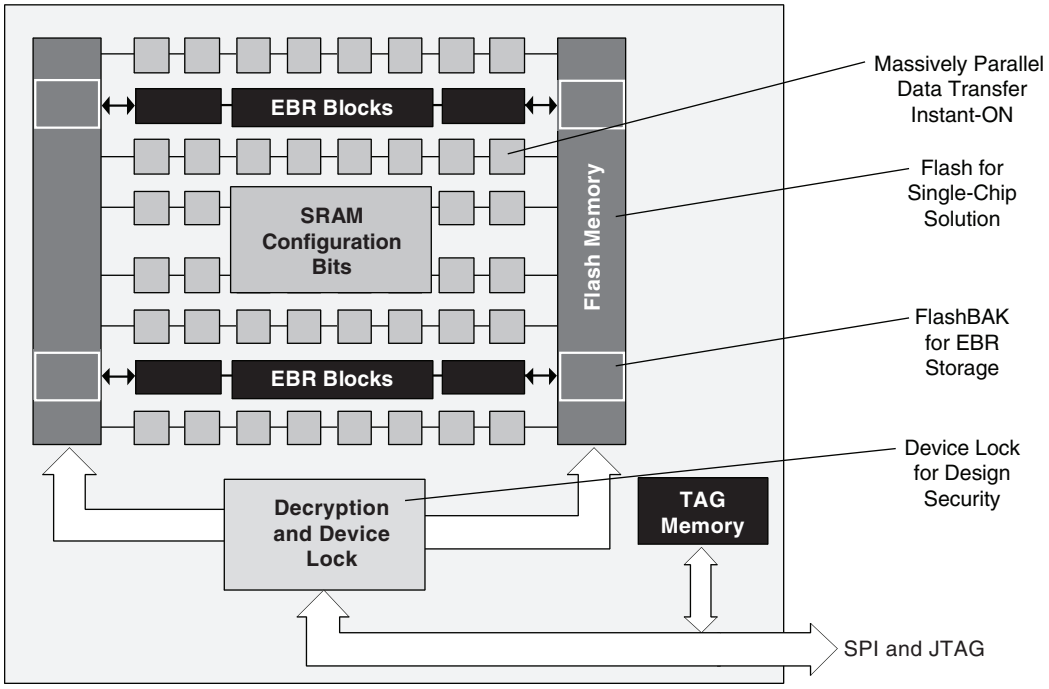

At power-up, or on user command, data is transferred from the on-chip Flash memory to the SRAM configuration cells that control the operation of the device. This is done with massively parallel buses enabling the parts to operate within microseconds of the power supplies reaching valid levels; this capability is referred to as Instant-On.

The on-chip Flash enables a single-chip solution eliminating the need for external boot memory. This Flash can be programmed through either the JTAG or Slave SPI ports of the device. The SRAM configuration space can also be infinitely reconfigured through the JTAG and Master SPI ports. The JTAG port is IEEE 1149.1 and IEEE 1532 compliant.

As described in the EBR section of the data sheet, the FlashBAK capability of the parts enables the contents of the EBR blocks to be written back into the Flash storage area without erasing or reprogramming other aspects of the device configuration. Serial TAG memory is also available to allow the storage of small amounts of data such as calibration coefficients and error codes.

For applications where security is important, the lack of an external bitstream provides a solution that is inherently more secure than SRAM only FPGAs. This is further enhanced by device locking. The device can be in one of three modes:

1. Unlocked
2. Key Locked – Presenting the key through the programming interface allows the device to be unlocked.
3. Permanently Locked – The device is permanently locked.

To further complement the security of the device a One Time Programmable (OTP) mode is available. Once the device is set in this mode it is not possible to erase or re-program the Flash portion of the device.

Serial TAG Memory

LA-LatticeXP2 devices offer 0.6 to 3.3kbits of Flash memory in the form of Serial TAG memory. The TAG memory is an area of the on-chip Flash that can be used for non-volatile storage including electronic ID codes, version codes, date stamps, asset IDs and calibration settings. A block diagram of the TAG memory is shown in Figure 2-34. The TAG memory is accessed in the same way as external SPI Flash and it can be read or programmed either through JTAG, an external Slave SPI Port, or directly from FPGA logic. To read the TAG memory, a start address is specified and the entire TAG memory contents are read sequentially in a first-in-first-out manner. The TAG memory is independent of the Flash used for device configuration and given its use for general-purpose storage functions is always accessible regardless of the device security settings. For more information, see TN1137, LatticeXP2 Memory Usage Guide and TN1141, LatticeXP2 sysCONFIG Usage Guide.

Figure 2-34. Serial TAG Memory Diagram

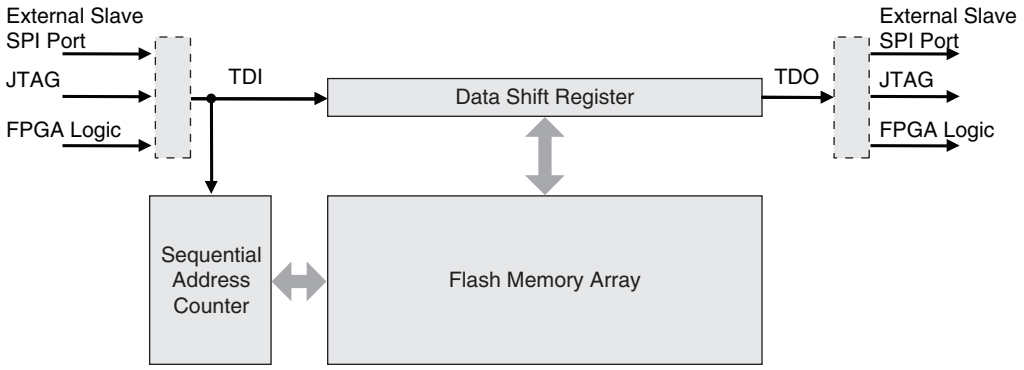

Live Update Technology

Many applications require field updates of the FPGA. LA-LatticeXP2 devices provide three features that enable this configuration to be done in a secure and failsafe manner while minimizing impact on system operation.

1. **Decryption Support**
   LA-LatticeXP2 devices provide on-chip, non-volatile key storage to support decryption of a 128-bit AES encrypted bitstream, securing designs and deterring design piracy.

2. **TransFR (Transparent Field Reconfiguration)**
   TransFR I/O (TFR) is a unique Lattice technology that allows users to update their logic in the field without interrupting system operation using a single ispVM command. TransFR I/O allows I/O states to be frozen during device configuration. This allows the device to be field updated with a minimum of system disruption and downtime. For more information please see TN1143, LatticeXP2 TransFR I/O.

3. **Dual Boot Image Support**
   Dual boot images are supported for applications requiring reliable remote updates of configuration data for the system FPGA. After the system is running with a basic configuration, a new boot image can be downloaded remotely and stored in a separate location in the configuration storage device. Any time after the update the LA-LatticeXP2 can be re-booted from this new configuration file. If there is a problem such as corrupt data during download or incorrect version number with this new boot image, the LA-LatticeXP2 device can revert back

to the original backup configuration and try again. This all can be done without power cycling the system. For more information please see TN1220, LatticeXP2 Dual Boot Feature.

4. For more information on device configuration, see TN1141, LatticeXP2 sysCONFIG Usage Guide.

Soft Error Detect (SED) Support

LA-LatticeXP2 devices have dedicated logic to perform Cyclic Redundancy Code (CRC) checks. During configuration, the configuration data bitstream can be checked with the CRC logic block. In addition, LA-LatticeXP2 devices can be programmed for checking soft errors in SRAM. SED can be run on a programmed device when the user logic is not active. In the event a soft error occurs, the device can be programmed to either reload from a known good boot image (from internal Flash or external SPI memory) or generate an error signal.

For further information on SED support, see TN1130, LatticeXP2 Soft Error Detection (SED) Usage Guide.

On-Chip Oscillator

Every LA-LatticeXP2 device has an internal CMOS oscillator that is used to derive a Master Clock (CCLK) for configuration. The oscillator and CCLK run continuously and are available to user logic after configuration is complete. The available CCLK frequencies are listed in Table 2-14. When a different CCLK frequency is selected during the design process, the following sequence takes place:

1. Device powers up with the default CCLK frequency.
2. During configuration, users select a different CCLK frequency.
3. CCLK frequency changes to the selected frequency after clock configuration bits are received.

This internal CMOS oscillator is available to the user by routing it as an input clock to the clock tree. For further information on the use of this oscillator for configuration or user mode, see TN1141, LatticeXP2 sysCONFIG Usage Guide.

Table 2-14. Selectable CCLKs and Oscillator Frequencies During Configuration and User Mode

CCLK/Oscillator (MHz)
2.5[1]
3.1[2]
4.3
5.4
6.9
8.1
9.2
10
13
15
20
26
32
40
54
80[3]
163[3]

1. Software default oscillator frequency.
2. Software default CCLK frequency.
3. Frequency not valid for CCLK.

Density Shifting

The LA-LatticeXP2 family is designed to ensure that different density devices in the same family and in the same package have the same pinout. Furthermore, the architecture ensures a high success rate when performing design migration from lower density devices to higher density devices. In many cases, it is also possible to shift a lower utilization design targeted for a high-density device to a lower density device. However, the exact details of the final resource utilization will impact the likely success in each case.

LA-LatticeXP2 Family Data Sheet DC and Switching Characteristics

February 2015 Data Sheet DS1024

Absolute Maximum Ratings[1, 2, 3]

Supply Voltage V_{CC} . . . . . –0.5 V to 1.32 V

Supply Voltage V_{CCAUX} . . . . . –0.5 V to 3.75 V

Supply Voltage V_{CCJ} . . . . . –0.5 V to 3.75 V

Supply Voltage V_{CCPLL}[4]. . . . . –0.5 V to 3.75 V

Output Supply Voltage V_{CCIO} . . . . . –0.5 V to 3.75 V

Input or I/O Tristate Voltage Applied[5]. . . –0.5 V to 3.75 V

Storage Temperature (Ambient) . . . . . –65 °C to 150 °C

Junction Temperature Under Bias (Tj). . . . . +125 °C

1. Stress above those listed under the “Absolute Maximum Ratings” may cause permanent damage to the device. Functional operation of the device at these or any other conditions above those indicated in the operational sections of this specification is not implied.
2. Compliance with the Lattice Thermal Management document is required.
3. All voltages referenced to GND.
4. V_{CCPLL} only available on csBGA, PQFP and TQFP packages.
5. Overshoot and undershoot of –2 V to (V_{IHMAX} + 2) volts is permitted for a duration of <20 ns.

Recommended Operating Conditions

Symbol	Parameter	Min.	Max.	Units
V_{CC}	Core Supply Voltage	1.14	1.26	V
V_{CCAUX}[4]	Auxiliary Supply Voltage	3.135	3.465	V
V_{CCPLL}[1]	PLL Supply Voltage	3.135	3.465	V
V_{CCIO}[2, 3, 4]	I/O Driver Supply Voltage	1.14	3.465	V
V_{CCJ}[2]	Supply Voltage for IEEE 1149.1 Test Access Port	1.14	3.465	V
t_{JAUTO}	Junction Temperature, Automotive Operation	–40	125	°C
$t_{JFLASHAUTO}$	Junction Temperature, Flash Programming, Automotive	–40	125	°C

1. V_{CCPLL} only available on csBGA, PQFP and TQFP packages.
2. If V_{CCIO} or V_{CCJ} is set to 1.2 V, they must be connected to the same power supply as $V_{CC.}$ If V_{CCIO} or V_{CCJ} is set to 3.3 V, they must be connected to the same power supply as V_{CCAUX}.
3. See recommended voltages by I/O standard in subsequent table.
4. To ensure proper I/O behavior, V_{CCIO} must be turned off at the same time or earlier than $V_{CCAUX.}$

On-Chip Flash Memory Specifications

Symbol	Parameter	Max.	Units
$N_{PROGCYC}$	Flash Programming Cycles per $t_{RETENTION}$	10,000	Cycles
	Flash Functional Programming Cycles	100,000	
$t_{RETENTION}$	Data Retention	20	Years

© 2015 Lattice Semiconductor Corp. All Lattice trademarks, registered trademarks, patents, and disclaimers are as listed at www.latticesemi.com/legal. All other brand or product names are trademarks or registered trademarks of their respective holders. The specifications and information herein are subject to change without notice.

Hot Socketing Specifications[1, 2, 3, 4]

Symbol	Parameter	Condition	Min.	Typ.	Max.	Units
I_{DK}	Input or I/O Leakage Current	$0 \le V_{IN} \le V_{IH}$ (MAX.)	—	—	+/–1	mA

1. Insensitive to sequence of V_{CC}, V_{CCAUX} and V_{CCIO}. However, assumes monotonic rise/fall rates for V_{CC}, V_{CCAUX} and V_{CCIO}.
2. $0 \le V_{CC} \le V_{CC}$ (MAX), $0 \le V_{CCIO} \le V_{CCIO}$ (MAX) or $0 \le V_{CCAUX} \le V_{CCAUX}$ (MAX).
3. I_{DK} is additive to I_{PU}, I_{PW} or I_{BH}.
4. LVCMOS and LVTTL only.

ESD Performance

Please refer to the LatticeXP2 Product Family Qualification Summary for complete qualification data, including ESD performance.

DC Electrical Characteristics

Over Recommended Operating Conditions

Symbol	Parameter	Condition	Min.	Typ.	Max.	Units
I_{IL}, I_{IH}[1]	Input or I/O Low Leakage	$0 \le V_{IN} \le V_{CCIO}$	—	—	10	µA
		$V_{CCIO} \le V_{IN} \le V_{IH}$ (MAX)	—	—	150	µA
I_{PU}	I/O Active Pull-up Current	$0 \le V_{IN} \le 0.7\ V_{CCIO}$	–30	—	–150	µA
I_{PD}	I/O Active Pull-down Current	V_{IL} (MAX) $\le V_{IN} \le V_{CCIO}$	30	—	210	µA
I_{BHLS}	Bus Hold Low Sustaining Current	$V_{IN} = V_{IL}$ (MAX)	30	—	—	µA
I_{BHHS}	Bus Hold High Sustaining Current	$V_{IN} = 0.7\ V_{CCIO}$	–30	—	—	µA
I_{BHLO}	Bus Hold Low Overdrive Current	$0 \le V_{IN} \le V_{CCIO}$	—	—	210	µA
I_{BHHO}	Bus Hold High Overdrive Current	$0 \le V_{IN} \le V_{CCIO}$	—	—	–150	µA
V_{BHT}	Bus Hold Trip Points		V_{IL} (MAX)	—	V_{IH} (MIN)	V
C1	I/O Capacitance[2]	V_{CCIO} = 3.3 V, 2.5 V, 1.8 V, 1.5 V, 1.2 V, V_{CC} = 1.2 V, V_{IO} = 0 to V_{IH} (MAX)	—	8	—	pf
C2	Dedicated Input Capacitance	V_{CCIO} = 3.3 V, 2.5 V, 1.8 V, 1.5 V, 1.2 V, V_{CC} = 1.2 V, V_{IO} = 0 to V_{IH} (MAX)	—	6	—	pf

1. Input or I/O leakage current is measured with the pin con•gured as an input or as an I/O with the output driver tri-stated. It is not measured with the output driver active. Bus maintenance circuits are disabled.
2. T_A 25 °C, f = 1.0 MHz.

Supply Current (Standby)[1, 2, 3, 4]

Over Recommended Operating Conditions

Symbol	Parameter	Device	Typical[5]	Units
I_{CC}	Core Power Supply Current	LA-XP2-5	14	mA
		LA-XP2-8	18	mA
		LA-XP2-17	24	mA
I_{CCAUX}	Auxiliary Power Supply Current[6]	LA-XP2-5	15	mA
		LA-XP2-8	15	mA
		LA-XP2-17	15	mA
I_{CCPLL}	PLL Power Supply Current (per PLL)		1	mA
I_{CCIO}	Bank Power Supply Current (per bank)		2	mA
I_{CCJ}	V_{CCJ} Power Supply Current		1	mA

1. For further information on supply current, see TN1139, Power Estimation and Management for LatticeXP2 Devices.
2. Assumes all outputs are tristated, all inputs are con•gured as LVCMOS and held at the V_{CCIO} or GND.
3. Frequency 0 MHz.
4. Pattern represents a “blank” con•guration data •le.
5. T_J = 25 °C, power supplies at nominal voltage.
6. In fpBGA packages the PLLs are connected to and powered from the auxiliary power supply. For these packages, the actual auxiliary supply current is the sum of I_{CCAUX} and I_{CCPLL}. For csBGA, PQFP and TQFP packages the PLLs are powered independent of the auxiliary power supply.

Initialization Supply Current[1, 2, 3, 4, 5]

Over Recommended Operating Conditions

Symbol	Parameter	Device	Typical (25 °C, Max. Supply)[6]	Units
I_{CC}	Core Power Supply Current	LA-XP2-5	20	mA
		LA-XP2-8	21	mA
		LA-XP2-17	44	mA
I_{CCAUX}	Auxiliary Power Supply Current[7]	LA-XP2-5	67	mA
		LA-XP2-8	74	mA
		LA-XP2-17	112	mA
I_{CCPLL}	PLL Power Supply Current (per PLL)		1.8	mA
I_{CCIO}	Bank Power Supply Current (per Bank)		6.4	mA
I_{CCJ}	VCCJ Power Supply Current		1.2	mA

1. For further information on supply current, see TN1139, Power Estimation and Management for LatticeXP2 Devices.
2. Assumes all outputs are tristated, all inputs are con•gured as LVCMOS and held at the V_{CCIO} or GND.
3. Frequency 0 MHz.
4. Does not include additional current from bypass or decoupling capacitor across the supply.
5. A specific configuration pattern is used that scales with the size of the device; consists of 75% PFU utilization, 50% EBR, and 25% I/O configuration.
6. T_J = 25 °C, power supplies at nominal voltage.
7. In fpBGA packages the PLLs are connected to and powered from the auxiliary power supply. For these packages, the actual auxiliary supply current is the sum of I_{CCAUX} and I_{CCPLL}. For csBGA, PQFP and TQFP packages the PLLs are powered independent of the auxiliary power supply.

Programming and Erase Flash Supply Current[1, 2, 3, 4, 5]

Over Recommended Operating Conditions

Symbol	Parameter	Device	Typical (25 °C, Max. Supply)[6]	Units
I_{CC}	Core Power Supply Current	LA-XP2-5	17	mA
		LA-XP2-8	21	mA
		LA-XP2-17	28	mA
I_{CCAUX}	Auxiliary Power Supply Current[7]	LA-XP2-5	64	mA
		LA-XP2-8	66	mA
		LA-XP2-17	83	mA
I_{CCPLL}	PLL Power Supply Current (per PLL)		0.1	mA
I_{CCIO}	Bank Power Supply Current (per Bank)		5	mA
I_{CCJ}	V_{CCJ} Power Supply Current[8]		14	mA

1. For further information on supply current, see TN1139, Power Estimation and Management for LatticeXP2 Devices.
2. Assumes all outputs are tristated, all inputs are con•gured as LVCMOS and held at the V_{CCIO} or GND.
3. Frequency 0 MHz (excludes dynamic power from FPGA operation).
4. A specific configuration pattern is used that scales with the size of the device; consists of 75% PFU utilization, 50% EBR, and 25% I/O configuration.
5. Bypass or decoupling capacitor across the supply.
6. T_J = 25 °C, power supplies at nominal voltage.
7. In fpBGA packages the PLLs are connected to and powered from the auxiliary power supply. For these packages, the actual auxiliary supply current is the sum of I_{CCAUX} and I_{CCPLL}. For csBGA, PQFP and TQFP packages the PLLs are powered independent of the auxiliary power supply.
8. When programming via JTAG.

sysIO Recommended Operating Conditions

Over Recommended Operating Conditions

Standard	V_{CCIO}			V_{REF} (V)		
	Min.	Typ.	Max.	Min.	Typ.	Max.
LVCMOS33[2]	3.135	3.3	3.465	—	—	—
LVCMOS25[2]	2.375	2.5	2.625	—	—	—
LVCMOS18	1.71	1.8	1.89	—	—	—
LVCMOS15	1.425	1.5	1.575	—	—	—
LVCMOS12[2]	1.14	1.2	1.26	—	—	—
LVTTL33[2]	3.135	3.3	3.465	—	—	—
PCI33	3.135	3.3	3.465	—	—	—
SSTL18_I[2], SSTL18_II[2]	1.71	1.8	1.89	0.833	0.9	0.969
SSTL25_I[2], SSTL25_II[2]	2.375	2.5	2.625	1.15	1.25	1.35
SSTL33_I[2], SSTL33_II[2]	3.135	3.3	3.465	1.3	1.5	1.7
HSTL15_I[2]	1.425	1.5	1.575	0.68	0.75	0.9
HSTL18_I[2], HSTL18_II[2]	1.71	1.8	1.89	0.816	0.9	1.08
LVDS25[2]	2.375	2.5	2.625	—	—	—
MLVDS25[1]	2.375	2.5	2.625	—	—	—
LVPECL33[1, 2]	3.135	3.3	3.465	—	—	—
BLVDS25[1, 2]	2.375	2.5	2.625	—	—	—
RSDS[1, 2]	2.375	2.5	2.625	—	—	—
SSTL18D_I[2], SSTL18D_II[2]	1.71	1.8	1.89	—	—	—
SSTL25D_ I[2], SSTL25D_II[2]	2.375	2.5	2.625	—	—	—
SSTL33D_ I[2], SSTL33D_ II[2]	3.135	3.3	3.465	—	—	—
HSTL15D_ I[2]	1.425	1.5	1.575	—	—	—
HSTL18D_ I[2], HSTL18D_ II[2]	1.71	1.8	1.89	—	—	—

1. Inputs on chip. Outputs are implemented with the addition of external resistors.
2. Input on this standard does not depend on the value of V_{CCIO}.

sysIO Single-Ended DC Electrical Characteristics

Over Recommended Operating Conditions

Input/Output Standard	V_{IL}		V_{IH}		V_{OL}	V_{OH}	I_{OL}[1] (mA)	I_{OH}[1] (mA)
	Min. (V)	Max. (V)	Min. (V)	Max. (V)	Max. (V)	Min. (V)		
LVCMOS33	–0.3	0.8	2.0	3.6	0.4	V_{CCIO} - 0.4	20, 16, 12, 8, 4	–20, –16, –12, –8, –4
					0.2	V_{CCIO} - 0.2	0.1	–0.1
LVTTL33	–0.3	0.8	2.0	3.6	0.4	V_{CCIO} - 0.4	20, 16, 12, 8, 4	–20, –16, –12, –8, –4
					0.2	V_{CCIO} - 0.2	0.1	–0.1
LVCMOS25	–0.3	0.7	1.7	3.6	0.4	V_{CCIO} - 0.4	20, 16, 12, 8, 4	–20, –16, –12, –8, –4
					0.2	V_{CCIO} - 0.2	0.1	–0.1
LVCMOS18	–0.3	0.35 V_{CCIO}	0.65 V_{CCIO}	3.6	0.4	V_{CCIO} - 0.4	16, 12, 8, 4	–16, –12, –8, –4
					0.2	V_{CCIO} - 0.2	0.1	–0.1
LVCMOS15	–0.3	0.35 V_{CCIO}	0.65 V_{CCIO}	3.6	0.4	V_{CCIO} - 0.4	8, 4	–8, –4
					0.2	V_{CCIO} - 0.2	0.1	–0.1
LVCMOS12	–0.3	0.35 V_{CC}	0.65 V_{CC}	3.6	0.4	V_{CCIO} - 0.4	6, 2	–6, –2
					0.2	V_{CCIO} - 0.2	0.1	–0.1
PCI33	–0.3	0.3 V_{CCIO}	0.5 V_{CCIO}	3.6	0.1 V_{CCIO}	0.9 V_{CCIO}	1.5	–0.5
SSTL33_I	–0.3	V_{REF} - 0.2	V_{REF} + 0.2	3.6	0.7	V_{CCIO} - 1.1	8	–8
SSTL33_II	–0.3	V_{REF} - 0.2	V_{REF} + 0.2	3.6	0.5	V_{CCIO} - 0.9	16	–16
SSTL25_I	–0.3	V_{REF} - 0.18	V_{REF} + 0.18	3.6	0.54	V_{CCIO} - 0.62	7.6	–7.6
							12	–12
SSTL25_II	–0.3	V_{REF} - 0.18	V_{REF} + 0.18	3.6	0.35	V_{CCIO} - 0.43	15.2	–15.2
							20	–20
SSTL18_I	–0.3	V_{REF} - 0.125	V_{REF} + 0.125	3.6	0.4	V_{CCIO} - 0.4	6.7	–6.7
SSTL18_II	–0.3	V_{REF} - 0.125	V_{REF} + 0.125	3.6	0.28	V_{CCIO} - 0.28	8	–8
							11	–11
HSTL15_I	–0.3	V_{REF} - 0.1	V_{REF} + 0.1	3.6	0.4	V_{CCIO} - 0.4	4	–4
							8	–8
HSTL18_I	–0.3	V_{REF} - 0.1	V_{REF} + 0.1	3.6	0.4	V_{CCIO} - 0.4	8	–8
							12	–12
HSTL18_II	–0.3	V_{REF} - 0.1	V_{REF} + 0.1	3.6	0.4	V_{CCIO} - 0.4	16	–16

1. The average DC current drawn by I/Os between GND connections, or between the last GND in an I/O bank and the end of an I/O bank, as shown in the logic signal connections table shall not exceed n * 8 mA, where n is the number of I/Os between bank GND connections or between the last GND in a bank and the end of a bank.

sysIO Differential Electrical Characteristics

LVDS

Over Recommended Operating Conditions

Parameter	Description	Test Conditions	Min.	Typ.	Max.	Units
V_{INP}, V_{INM}	Input Voltage		0	—	2.4	V
V_{CM}	Input Common Mode Voltage	Half the Sum of the Two Inputs	0.05	—	2.35	V
V_{THD}	Differential Input Threshold	Difference Between the Two Inputs	+/–100	—	—	mV
I_{IN}	Input Current	Power On or Power Off	—	—	+/–10	µA
V_{OH}	Output High Voltage for V_{OP} or V_{OM}	R_T = 100 Ohm	—	1.38	1.60	V
V_{OL}	Output Low Voltage for V_{OP} or V_{OM}	R_T = 100 Ohm	0.9 V	1.03	—	V
V_{OD}	Output Voltage Differential	(V_{OP} - V_{OM}), R_T = 100 Ohm	250	350	450	mV
ýV_{OD}	Change in V_{OD} Between High and Low		—	—	50	mV
V_{OS}	Output Voltage Offset	(V_{OP} + V_{OM})/2, R_T = 100 Ohm	1.125	1.20	1.375	V
ýV_{OS}	Change in V_{OS} Between H and L		—	—	50	mV
I_{SA}	Output Short Circuit Current	V_{OD} = 0 V Driver Outputs Shorted to Ground	—	—	24	mA
I_{SAB}	Output Short Circuit Current	V_{OD} = 0 V Driver Outputs Shorted to Each Other	—	—	12	mA

Differential HSTL and SSTL

Differential HSTL and SSTL outputs are implemented as a pair of complementary single-ended outputs. All allowable single-ended output classes (class I and class II) are supported in this mode.

For further information on LVPECL, RSDS, MLVDS, BLVDS and other differential interfaces please see details in additional technical notes listed at the end of this data sheet.

LVDS25E

The top and bottom sides of LA-LatticeXP2 devices support LVDS outputs via emulated complementary LVCMOS outputs in conjunction with a parallel resistor across the driver outputs. The scheme shown in Figure 3-1 is one possible solution for point-to-point signals.

Figure 3-1. LVDS25E Output Termination Example

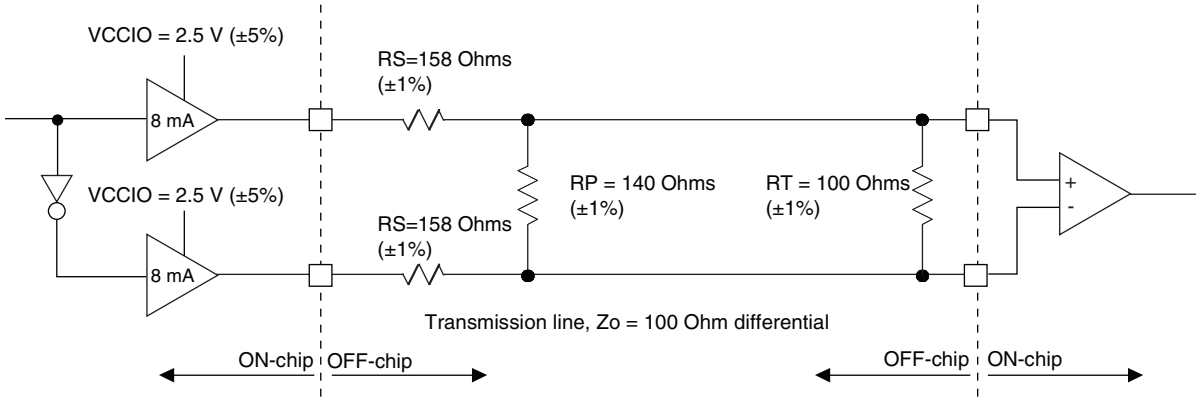

Table 3-1. LVDS25E DC Conditions

Parameter	Description	Typical	Units
V_{CCIO}	Output Driver Supply (+/–5%)	2.50	V
Z_{OUT}	Driver Impedance	20	Ω
R_S	Driver Series Resistor (+/–1%)	158	Ω
R_P	Driver Parallel Resistor (+/–1%)	140	Ω
R_T	Receiver Termination (+/–1%)	100	Ω
V_{OH}	Output High Voltage (after R_P)	1.43	V
V_{OL}	Output Low Voltage (after R_P)	1.07	V
V_{OD}	Output Differential Voltage (After R_P)	0.35	V
V_{CM}	Output Common Mode Voltage	1.25	V
Z_{BACK}	Back Impedance	100.5	Ω
I_{DC}	DC Output Current	6.03	mA

LVCMOS33D

All I/O banks support emulated differential I/O using the LVCMOS33D I/O type. This option, along with the external resistor network, provides the system designer the flexibility to place differential outputs on an I/O bank with 3.3 V VCCIO. The default drive current for LVCMOS33D output is 12 mA with the option to change the device strength to 4 mA, 8 mA, 16 mA or 20 mA. Follow the LVCMOS33 specifications for the DC characteristics of the LVCMOS33D.

BLVDS

The LA-LatticeXP2 devices support the BLVDS standard. This standard is emulated using complementary LVCMOS outputs in conjunction with a parallel external resistor across the driver outputs. BLVDS is intended for use when multi-drop and bi-directional multi-point differential signaling is required. The scheme shown in Figure 3-2 is one possible solution for bi-directional multi-point differential signals.

Figure 3-2. BLVDS Multi-point Output Example

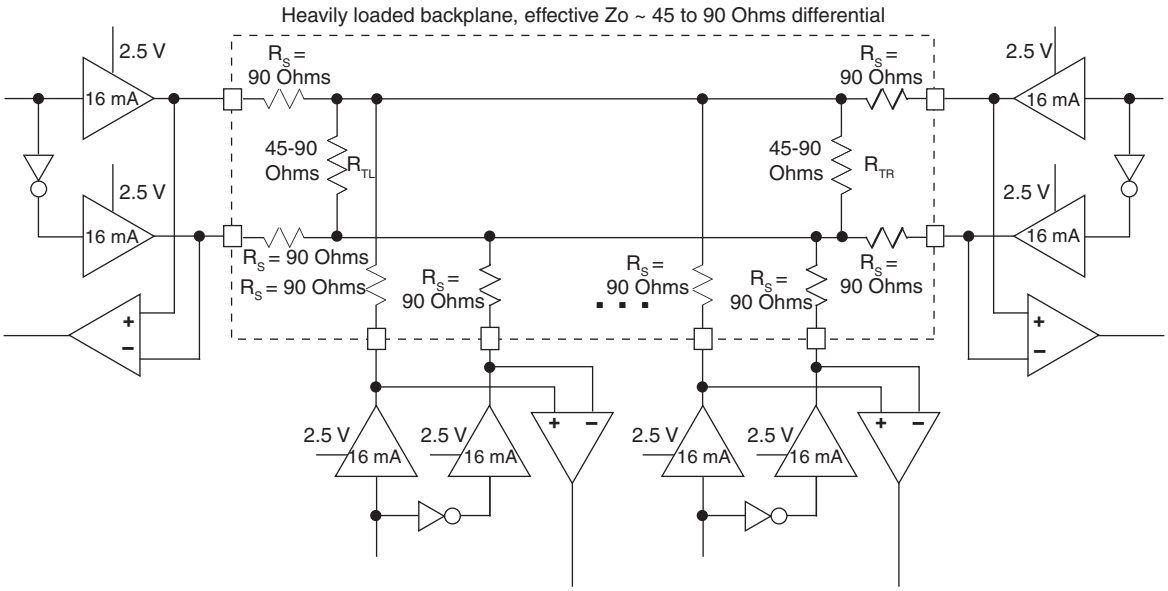

Table 3-2. BLVDS DC Conditions[1]

Over Recommended Operating Conditions

Parameter	Description	Typical		Units
		Zo = 45 Ω	Zo = 45 Ω	
V_{CCIO}	Output Driver Supply (+/– 5%)	2.50	2.50	V
Z_{OUT}	Driver Impedance	10.00	10.00	Ω
R_S	Driver Series Resistor (+/– 1%)	90.00	90.00	Ω
R_{TL}	Driver Parallel Resistor (+/– 1%)	45.00	90.00	Ω
R_{TR}	Receiver Termination (+/– 1%)	45.00	90.00	Ω
V_{OH}	Output High Voltage (After R_{TL})	1.38	1.48	V
V_{OL}	Output Low Voltage (After R_{TL})	1.12	1.02	V
V_{OD}	Output Differential Voltage (After R_{TL})	0.25	0.46	V
V_{CM}	Output Common Mode Voltage	1.25	1.25	V
I_{DC}	DC Output Current	11.24	10.20	mA

1. For input buffer, see LVDS table.

LVPECL

The LA-LatticeXP2 devices support the differential LVPECL standard. This standard is emulated using complementary LVCMOS outputs in conjunction with a parallel resistor across the driver outputs. The LVPECL input standard is supported by the LVDS differential input buffer. The scheme shown in Figure 3-3 is one possible solution for point-to-point signals.

Figure 3-3. Differential LVPECL

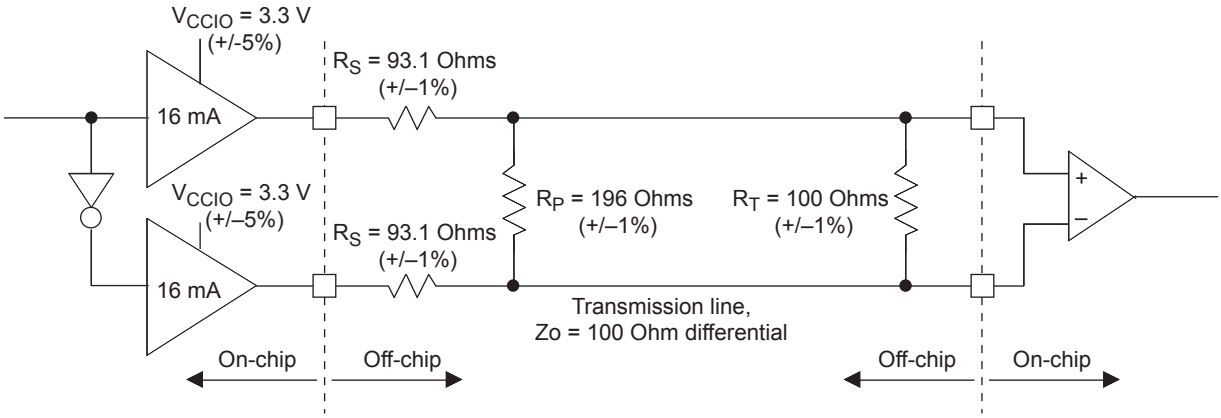

Table 3-3. LVPECL DC Conditions[1]

Over Recommended Operating Conditions

Parameter	Description	Typical	Units
V_{CCIO}	Output Driver Supply (+/–5%)	3.30	V
Z_{OUT}	Driver Impedance	10	Ω
R_S	Driver Series Resistor (+/–1%)	93	Ω
R_P	Driver Parallel Resistor (+/–1%)	196	Ω
R_T	Receiver Termination (+/–1%)	100	Ω
V_{OH}	Output High Voltage (After R_P)	2.05	V
V_{OL}	Output Low Voltage (After R_P)	1.25	V
V_{OD}	Output Differential Voltage (After R_P)	0.80	V
V_{CM}	Output Common Mode Voltage	1.65	V
Z_{BACK}	Back Impedance	100.5	Ω
I_{DC}	DC Output Current	12.11	mA

1. For input buffer, see LVDS table.

RSDS

The LA-LatticeXP2 devices support differential RSDS standard. This standard is emulated using complementary LVCMOS outputs in conjunction with a parallel resistor across the driver outputs. The RSDS input standard is supported by the LVDS differential input buffer. The scheme shown in Figure 3-4 is one possible solution for RSDS standard implementation. Resistor values in Figure 3-4 are industry standard values for 1% resistors.

Figure 3-4. RSDS (Reduced Swing Differential Standard)

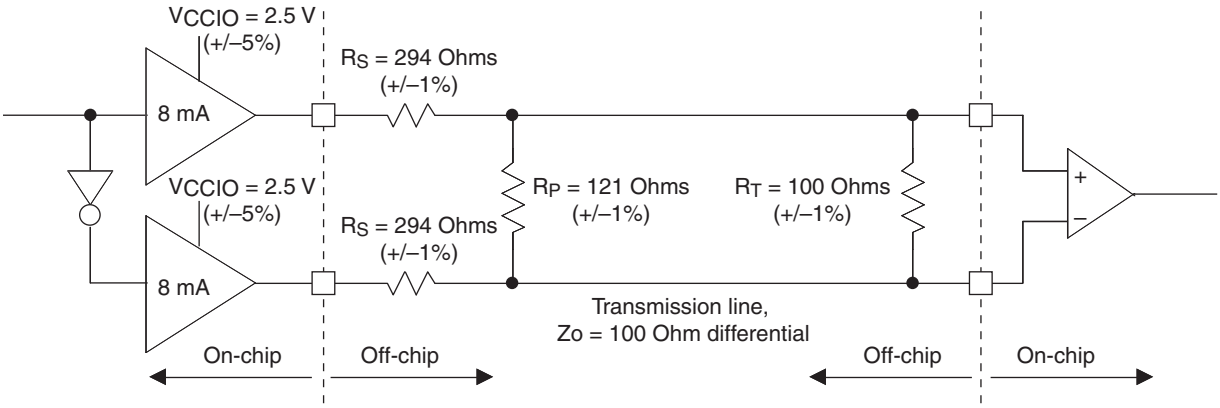

Table 3-4. RSDS DC Conditions[1]

Over Recommended Operating Conditions

Parameter	Description	Typical	Units
V_{CCIO}	Output Driver Supply (+/–5%)	2.50	V
Z_{OUT}	Driver Impedance	20	Ω
R_S	Driver Series Resistor (+/–1%)	294	Ω
R_P	Driver Parallel Resistor (+/–1%)	121	Ω
R_T	Receiver Termination (+/–1%)	100	Ω
V_{OH}	Output High Voltage (After R_P)	1.35	V
V_{OL}	Output Low Voltage (After R_P)	1.15	V
V_{OD}	Output Differential Voltage (After R_P)	0.20	V
V_{CM}	Output Common Mode Voltage	1.25	V
Z_{BACK}	Back Impedance	101.5	Ω
I_{DC}	DC Output Current	3.66	mA

1. For input buffer, see LVDS table.

MLVDS

The LA-LatticeXP2 devices support the differential MLVDS standard. This standard is emulated using complementary LVCMOS outputs in conjunction with a parallel resistor across the driver outputs. The MLVDS input standard is supported by the LVDS differential input buffer. The scheme shown in Figure 3-5 is one possible solution for MLVDS standard implementation. Resistor values in Figure 3-5 are industry standard values for 1% resistors.

Figure 3-5. MLVDS (Reduced Swing Differential Standard)

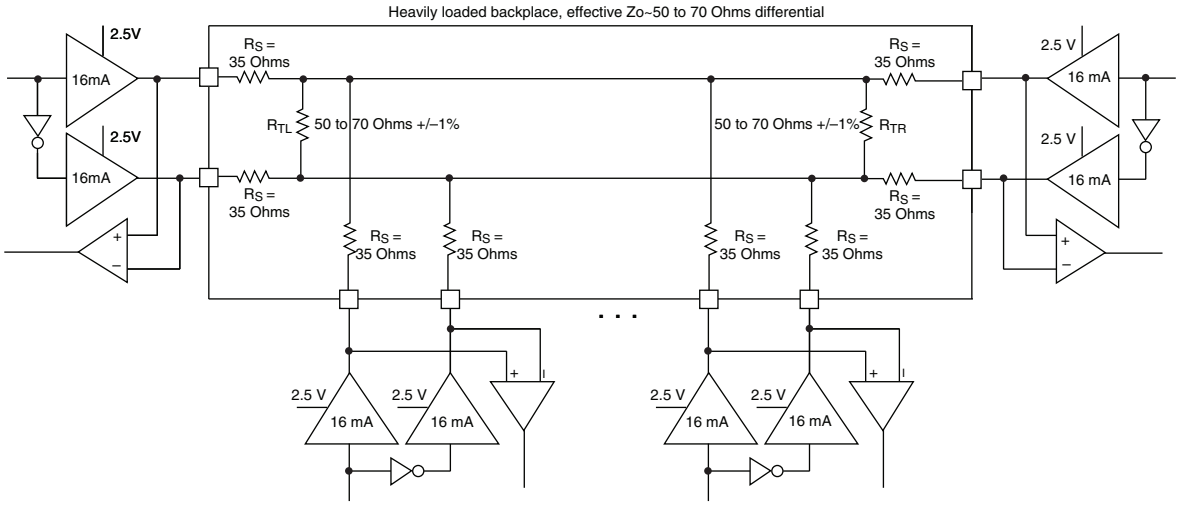

Table 3-5. MLVDS DC Conditions[1]

Parameter	Description	Typical		Units
		Zo=50 Ω	Zo=70 Ω	
V_{CCIO}	Output Driver Supply (+/–5%)	2.50	2.50	V
Z_{OUT}	Driver Impedance	10.00	10.00	Ω
R_S	Driver Series Resistor (+/–1%)	35.00	35.00	Ω
R_{TL}	Driver Parallel Resistor (+/–1%)	50.00	70.00	Ω
R_{TR}	Receiver Termination (+/–1%)	50.00	70.00	Ω
V_{OH}	Output High Voltage (After R_{TL})	1.52	1.60	V
V_{OL}	Output Low Voltage (After R_{TL})	0.98	0.90	V
V_{OD}	Output Differential Voltage (After R_{TL})	0.54	0.70	V
V_{CM}	Output Common Mode Voltage	1.25	1.25	V
I_{DC}	DC Output Current	21.74	20.00	mA

1. For input buffer, see LVDS table.

For further information on LVPECL, RSDS, MLVDS, BLVDS and other differential interfaces please see details of additional technical information at the end of this data sheet.

Typical Building Block Function Performance[1]

Over Recommended Operating Conditions

Pin-to-Pin Performance (LVCMOS25 12 mA Drive)

Function	–5 Timing	Units
Basic Functions		
16-bit Decoder	5.7	ns
32-bit Decoder	6.9	ns
64-bit Decoder	7.7	ns
4:1 MUX	4.8	ns
8:1 MUX	5.1	ns
16:1 MUX	5.6	ns
32:1 MUX	5.8	ns

Register-to-Register Performance

Function	–5 Timing	Units
Basic Functions		
16-bit Decoder	354	MHz
32-bit Decoder	318	MHz
64-bit Decoder	280	MHz
4:1 MUX	493	MHz
8:1 MUX	458	MHz
16:1 MUX	424	MHz
32:1 MUX	364	MHz
8-bit Adder	326	MHz
16-bit Adder	306	MHz
64-bit Adder	178	MHz
16-bit Counter	312	MHz
32-bit Counter	257	MHz
64-bit Counter	191	MHz
64-bit Accumulator	161	MHz
Embedded Memory Functions		
512 x 36 Single Port RAM, EBR Output Registers	252	MHz
1024 x 18 True-Dual Port RAM (Write Through or Normal, EBR Output Registers)	252	MHz
1024 x 18 True-Dual Port RAM (Write Through or Normal, PLC Output Registers)	173	MHz
Distributed Memory Functions		
16 x 4 Pseudo-Dual Port RAM (One PFU)	508	MHz
32 x 2 Pseudo-Dual Port RAM	313	MHz
64 x 1 Pseudo-Dual Port RAM	235	MHz
DSP Functions		
18 x 18 Multiplier (All Registers)	276	MHz
9 x 9 Multiplier (All Registers)	276	MHz
36 x 36 Multiply (All Registers)	244	MHz
18 x 18 Multiply/Accumulate (Input and Output Registers)	176	MHz
18 x 18 Multiply-Add/Sub-Sum (All Registers)	235	MHz

Register-to-Register Performance (Continued)

Function	–5 Timing	Units
DSP IP Functions		
16-Tap Fully-Parallel FIR Filter	136	MHz
1024-pt FFT	152	MHz
8 X 8 Matrix Multiplication	137	MHz

1. These timing numbers were generated using the ispLEVER design tool. Exact performance may vary with device, design and tool version. The tool uses internal parameters that have been characterized but are not tested on every device.

Timing v. A 0.12

Derating Timing Tables

Logic timing provided in the following sections of this data sheet and the Diamond design tools are worst case numbers in the operating range. Actual delays at nominal temperature and voltage for best case process, can be much better than the values given in the tables. The Diamond design software can provide logic timing numbers at a particular temperature and voltage.

LA-LatticeXP2 External Switching Characteristics

Over Recommended Operating Conditions

Parameter	Description	Device	–5		Units
			Min.	Max.	
General I/O Pin Parameters (using Primary Clock without PLL)[1]					
t_{CO}	Clock to Output - PIO Output Register	LA-XP2-5	—	4.77	ns
		LA-XP2-8	—	4.77	ns
		LA-XP2-17	—	4.78	ns
t_{SU}	Clock to Data Setup - PIO Input Register	LA-XP2-5	-0.06	—	ns
		LA-XP2-8	-0.06	—	ns
		LA-XP2-17	-0.06	—	ns
t_{H}	Clock to Data Hold - PIO Input Register	LA-XP2-5	1.98	—	ns
		LA-XP2-8	1.99	—	ns
		LA-XP2-17	1.99	—	ns
t_{SU_DEL}	Clock to Data Setup - PIO Input Register with Data Input Delay	LA-XP2-5	1.87	—	ns
		LA-XP2-8	1.87	—	ns
		LA-XP2-17	1.86	—	ns
t_{H_DEL}	Clock to Data Hold - PIO Input Register with Input Data Delay	LA-XP2-5	0.06	—	ns
		LA-XP2-8	0.06	—	ns
		LA-XP2-17	0.07	—	ns
f_{MAX_IO}	Clock Frequency of I/O and PFU Register	LA-XP2	—	311	MHz
General I/O Pin Parameters (using Edge Clock without PLL)[1]					
t_{COE}	Clock to Output - PIO Output Register	LA-XP2-5	—	4.00	ns
		LA-XP2-8	—	4.00	ns
		LA-XP2-17	—	4.00	ns
t_{SUE}	Clock to Data Setup - PIO Input Register	LA-XP2-5	0.00	—	ns
		LA-XP2-8	0.00	—	ns
		LA-XP2-17	0.00	—	ns
t_{HE}	Clock to Data Hold - PIO Input Register	LA-XP2-5	1.62	—	ns
		LA-XP2-8	1.62	—	ns
		LA-XP2-17	1.62	—	ns
t_{SU_DELE}	Clock to Data Setup - PIO Input Register with Data Input Delay	LA-XP2-5	1.62	—	ns
		LA-XP2-8	1.62	—	ns
		LA-XP2-17	1.62	—	ns
t_{H_DELE}	Clock to Data Hold - PIO Input Register with Input Data Delay	LA-XP2-5	0.00	—	ns
		LA-XP2-8	0.00	—	ns
		LA-XP2-17	0.00	—	ns
f_{MAX_IOE}	Clock Frequency of I/O and PFU Register	LA-XP2	—	311	MHz
General I/O Pin Parameters (using Primary Clock with PLL)[1]					
t_{COPLL}	Clock to Output - PIO Output Register	LA-XP2-5	—	3.80	ns
		LA-XP2-8	—	3.80	ns
		LA-XP2-17	—	3.80	ns
t_{SUPLL}	Clock to Data Setup - PIO Input Register	LA-XP2-5	1.25	—	ns
		LA-XP2-8	1.27	—	ns
		LA-XP2-17	1.23	—	ns

LA-LatticeXP2 External Switching Characteristics (Continued)

Over Recommended Operating Conditions

Parameter	Description	Device	–5		Units
			Min.	Max.	
t_{HPLL}	Clock to Data Hold - PIO Input Register	LA-XP2-5	1.32	—	ns
		LA-XP2-8	1.32	—	ns
		LA-XP2-17	1.32	—	ns
t_{SU_DELPLL}	Clock to Data Setup - PIO Input Register with Data Input Delay	LA-XP2-5	2.16	—	ns
		LA-XP2-8	2.18	—	ns
		LA-XP2-17	2.14	—	ns
t_{H_DELPLL}	Clock to Data Hold - PIO Input Register with Input Data Delay	LA-XP2-5	0.00	—	ns
		LA-XP2-8	0.00	—	ns
		LA-XP2-17	0.00	—	ns
DDR[2] and DDR2[3] I/O Pin Parameters					
t_{DVADQ}	Data Valid After DQS (DDR Read)	LA-XP2	—	0.29	UI
t_{DVEDQ}	Data Hold After DQS (DDR Read)	LA-XP2	0.71	—	UI
t_{DQVBS}	Data Valid Before DQS	LA-XP2	0.25	—	UI
t_{DQVAS}	Data Valid After DQS	LA-XP2	0.25	—	UI
f_{MAX_DDR}	DDR Clock Frequency	LA-XP2	95	133	MHz
f_{MAX_DDR2}	DDR Clock Frequency	LA-XP2	133	166	MHz
Primary Clock					
f_{MAX_PRI}	Frequency for Primary Clock Tree	LA-XP2	—	311	MHz
t_{W_PRI}	Clock Pulse Width for Primary Clock	LA-XP2	1	—	ns
t_{SKEW_PRI}	Primary Clock Skew Within a Bank	LA-XP2	—	160	ps
Edge Clock (ECLK1 and ECLK2)					
f_{MAX_ECLK}	Frequency for Edge Clock	LA-XP2	—	311	MHz
t_{W_ECLK}	Clock Pulse Width for Edge Clock	LA-XP2	1	—	ns
t_{SKEW_ECLK}	Edge Clock Skew Within an Edge of the Device	LA-XP2	—	130	ps

1. General timing numbers based on LVCMOS 2.5, 12mA, 0pf load.
2. DDR timing numbers based on SSTL25.
3. DDR2 timing numbers based on SSTL18.

Timing v. A 0.12

LA-LatticeXP2 Internal Switching Characteristics[1]

Over Recommended Operating Conditions

Parameter	Description	–5		Units
		Min.	Max.	
PFU/PFF Logic Mode Timing				
t_{LUT4_PFU}	LUT4 delay (A to D inputs to F output)	—	0.275	ns
t_{LUT6_PFU}	LUT6 delay (A to D inputs to OFX output)	—	0.522	ns
t_{LSR_PFU}	Set/Reset to output of PFU (Asynchronous)	—	0.865	ns
t_{SUM_PFU}	Clock to Mux (M0,M1) Input Setup Time	0.156	—	ns
t_{HM_PFU}	Clock to Mux (M0,M1) Input Hold Time	–0.056	—	ns
t_{SUD_PFU}	Clock to D input setup time	0.098	—	ns
t_{HD_PFU}	Clock to D input hold time	0.003	—	ns
t_{CK2Q_PFU}	Clock to Q delay, (D-type Register Configuration)	—	0.405	ns
t_{RSTREC_PFU}	Asynchronous reset recovery time for PFU Logic	—	0.791	ns
t_{RST_PFU}	Asynchronous reset time for PFU Logic	—	0.865	ns
PFU Dual Port Memory Mode Timing				
t_{CORAM_PFU}	Clock to Output (F Port)	—	1.535	ns
t_{SUDATA_PFU}	Data Setup Time	–0.290	—	ns
t_{HDATA_PFU}	Data Hold Time	0.330	—	ns
t_{SUADDR_PFU}	Address Setup Time	–0.392	—	ns
t_{HADDR_PFU}	Address Hold Time	0.392	—	ns
t_{SUWREN_PFU}	Write/Read Enable Setup Time	–0.204	—	ns
t_{HWREN_PFU}	Write/Read Enable Hold Time	0.219	—	ns
PIO Input/Output Buffer Timing				
t_{IN_PIO}	Input Buffer Delay (LVCMOS25)	—	0.708	ns
t_{OUT_PIO}	Output Buffer Delay (LVCMOS25)	—	1.308	ns
IOLOGIC Input/Output Timing				
t_{SUI_PIO}	Input Register Setup Time (Data Before Clock)	1.215	—	ns
t_{HI_PIO}	Input Register Hold Time (Data after Clock)	0.448	—	ns
t_{COO_PIO}	Output Register Clock to Output Delay	—	0.724	ns
t_{SUCE_PIO}	Input Register Clock Enable Setup Time	0.041	—	ns
t_{HCE_PIO}	Input Register Clock Enable Hold Time	–0.028	—	ns
t_{SULSR_PIO}	Set/Reset Setup Time	0.220	—	ns
t_{HLSR_PIO}	Set/Reset Hold Time	–0.094	—	ns
t_{RSTREC_PIO}	Asynchronous reset recovery time for IO Logic	0.269	—	ns
t_{RST_PIO}	Asynchronous reset time for PFU Logic	—	0.457	ns
t_{DEL}	Dynamic Delay Step Size	0.035	0.035	ns
EBR Timing				
t_{CO_EBR}	Clock (Read) to Output from Address or Data	—	3.552	ns
t_{COO_EBR}	Clock (Write) to Output from EBR Output Register	—	0.461	ns
t_{SUDATA_EBR}	Setup Data to EBR Memory (Write Clk)	–0.232	—	ns
t_{HDATA_EBR}	Hold Data to EBR Memory (Write Clk)	0.270	—	ns
t_{SUADDR_EBR}	Setup Address to EBR Memory (Write Clk)	–0.159	—	ns
t_{HADDR_EBR}	Hold Address to EBR Memory (Write Clk)	0.209	—	ns
t_{SUWREN_EBR}	Setup Write/Read Enable to EBR Memory (Write/Read Clk)	–0.184	—	ns

LA-LatticeXP2 Internal Switching Characteristics[1] (Continued)

Over Recommended Operating Conditions

Parameter	Description	–5		Units
		Min.	Max.	
t_{HWREN_EBR}	Hold Write/Read Enable to EBR Memory (Write/Read Clk)	0.217	—	ns
t_{SUCE_EBR}	Clock Enable Setup Time to EBR Output Register (Read Clk)	0.178	—	ns
t_{HCE_EBR}	Clock Enable Hold Time to EBR Output Register (Read Clk)	–0.131	—	ns
t_{RSTO_EBR}	Reset To Output Delay Time from EBR Output Register (Asynchronous)	—	1.544	ns
t_{SUBE_EBR}	Byte Enable Set-Up Time to EBR Output Register	–0.159	—	ns
t_{HBE_EBR}	Byte Enable Hold Time to EBR Output Register Dynamic Delay on Each PIO	0.209	—	ns
t_{RSTREC_EBR}	Asynchronous reset recovery time for EBR	0.351	—	ns
t_{RST_EBR}	Asynchronous reset time for EBR	—	1.544	ns
PLL Parameters				
$t_{RSTKREC_PLL}$	After RSTK De-assert, Recovery Time Before Next Clock Edge Can Toggle K-divider Counter	1.012	—	ns
t_{RSTREC_PLL}	After RST De-assert, Recovery Time Before Next Clock Edge Can Toggle M-divider Counter (Applies to M-Divider Portion of RST Only[2])	1.012	—	ns
DSP Block Timing				
t_{SUI_DSP}	Input Register Setup Time	0.168	—	ns
t_{HI_DSP}	Input Register Hold Time	–0.031	—	ns
t_{SUP_DSP}	Pipeline Register Setup Time	3.101	—	ns
t_{HP_DSP}	Pipeline Register Hold Time	–1.006	—	ns
t_{SUO_DSP}	Output Register Setup Time	6.002	—	ns
t_{HO_DSP}	Output Register Hold Time	–1.791	—	ns
t_{COI_DSP}[3]	Input Register Clock to Output Time	—	5.447	ns
t_{COP_DSP}[3]	Pipeline Register Clock to Output Time	—	2.420	ns
t_{COO_DSP}[3]	Output Register Clock to Output Time	—	0.639	ns
$t_{SUADSUB}$	AdSub Input Register Setup Time	–0.331	—	ns
t_{HADSUB}	AdSub Input Register Hold Time	0.375	—	ns

1. Internal parameters are characterized, but not tested on every device.
2. RST resets VCO and all counters in PLL.
3. These parameters include the Adder Subtractor block in the path.

Timing v. A 0.12

EBR Timing Diagrams

Figure 3-6. Read/Write Mode (Normal)

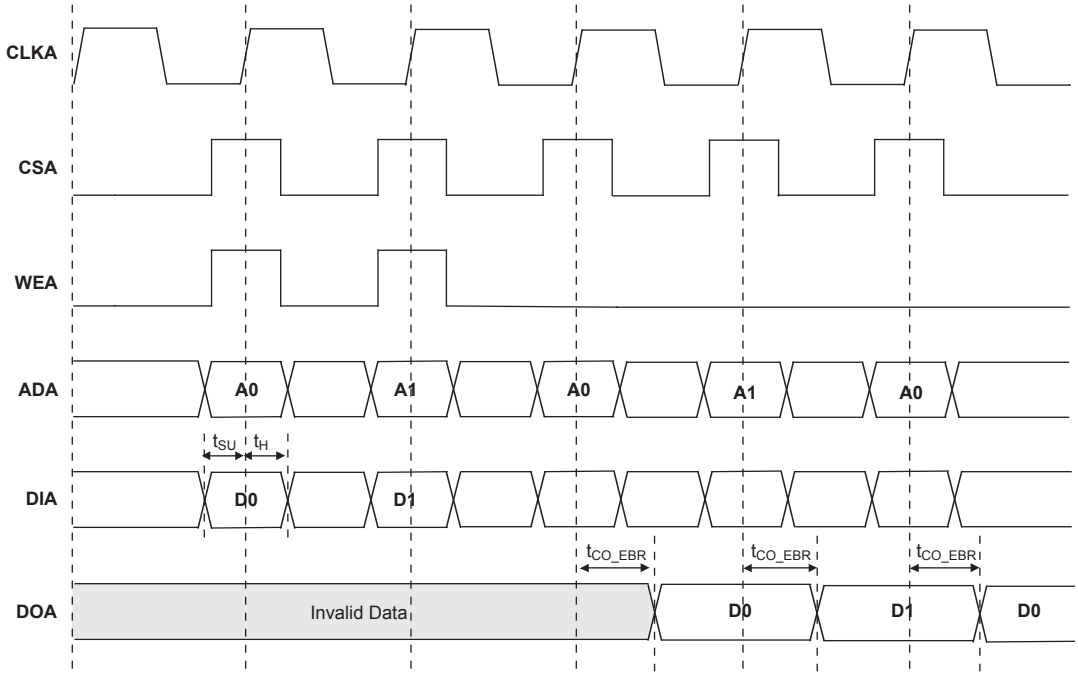

Note: Input data and address are registered at the positive edge of the clock and output data appears after the positive edge of the clock.

Figure 3-7. Read/Write Mode with Input and Output Registers

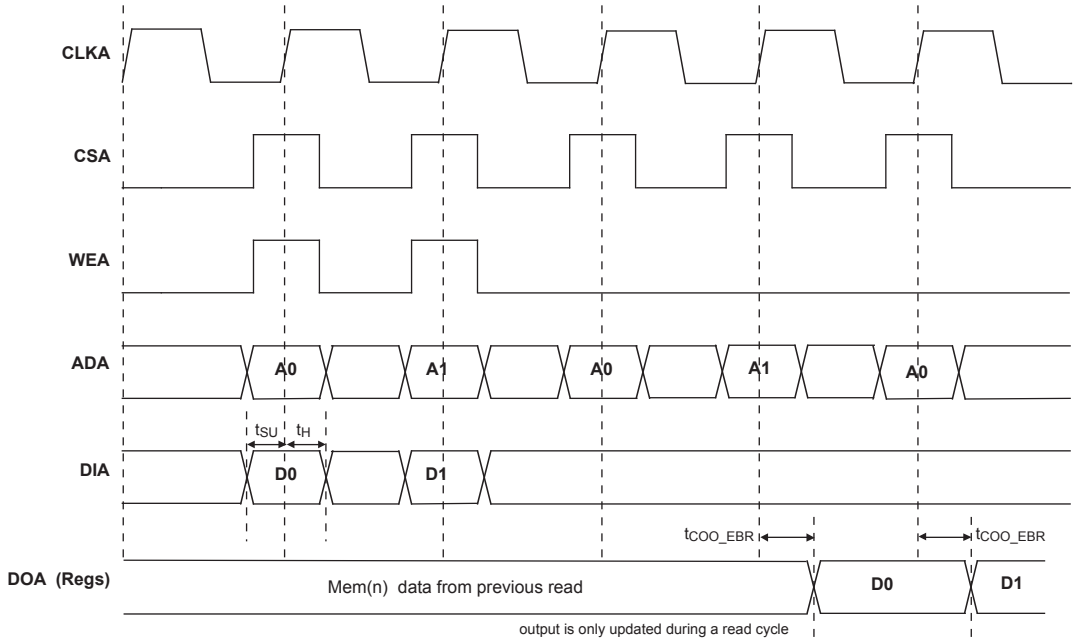

Figure 3-8. Write Through (SP Read/Write on Port A, Input Registers Only)

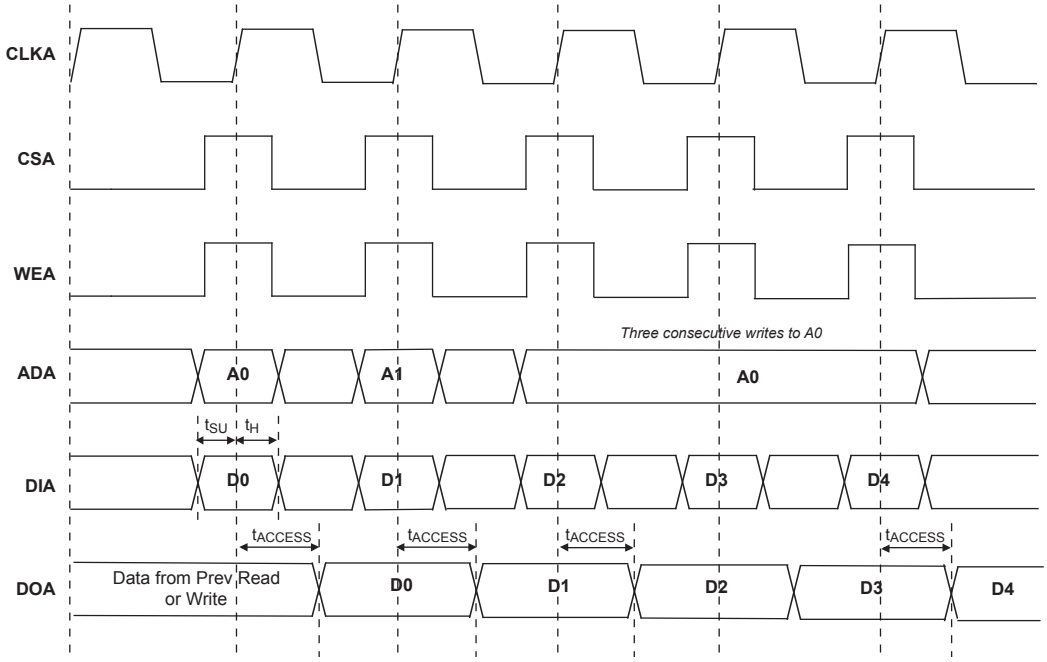

Note: Input data and address are registered at the positive edge of the clock and output data appears after the positive edge of the clock.

LA-LatticeXP2 Family Timing Adders[1, 2, 3]

Over Recommended Operating Conditions

Buffer Type	Description	–5	Units
Input Adjusters			
LVDS25	LVDS	0.05	ns
BLVDS25	BLVDS	0.05	ns
MLVDS	LVDS	0.05	ns
RSDS	RSDS	0.05	ns
LVPECL33	LVPECL	0.05	ns
HSTL18_I	HSTL_18 class I	0.07	ns
HSTL18_II	HSTL_18 class II	0.07	ns
HSTL18D_I	Differential HSTL 18 class I	0.02	ns
HSTL18D_II	Differential HSTL 18 class II	0.02	ns
HSTL15_I	HSTL_15 class I	0.06	ns
HSTL15D_I	Differential HSTL 15 class I	0.01	ns
SSTL33_I	SSTL_3 class I	0.12	ns
SSTL33_II	SSTL_3 class II	0.12	ns
SSTL33D_I	Differential SSTL_3 class I	0.04	ns
SSTL33D_II	Differential SSTL_3 class II	0.04	ns
SSTL25_I	SSTL_2 class I	0.10	ns
SSTL25_II	SSTL_2 class II	0.10	ns
SSTL25D_I	Differential SSTL_2 class I	0.03	ns
SSTL25D_II	Differential SSTL_2 class II	0.03	ns
SSTL18_I	SSTL_18 class I	0.07	ns
SSTL18_II	SSTL_18 class II	0.07	ns
SSTL18D_I	Differential SSTL_18 class I	0.02	ns
SSTL18D_II	Differential SSTL_18 class II	0.02	ns
LVTTL33	LVTTL	0.19	ns
LVCMOS33	LVCMOS 3.3	0.19	ns
LVCMOS25	LVCMOS 2.5	0.00	ns
LVCMOS18	LVCMOS 1.8	0.10	ns
LVCMOS15	LVCMOS 1.5	0.17	ns
LVCMOS12	LVCMOS 1.2	-0.04	ns
PCI33	3.3V PCI	0.19	ns
Output Adjusters			
LVDS25E	LVDS 2.5 E[4]	0.32	ns
LVDS25	LVDS 2.5	0.32	ns
BLVDS25	BLVDS 2.5	0.29	ns
MLVDS	MLVDS 2.5[4]	0.29	ns
RSDS	RSDS 2.5[4]	0.32	ns
LVPECL33	LVPECL 3.3[4]	0.19	ns
HSTL18_I	HSTL_18 class I 8mA drive	0.45	ns
HSTL18_II	HSTL_18 class II	0.31	ns
HSTL18D_I	Differential HSTL 18 class I 8mA drive	0.45	ns
HSTL18D_II	Differential HSTL 18 class II	0.31	ns

LA-LatticeXP2 Family Timing Adders[1, 2, 3] (Continued)

Over Recommended Operating Conditions

Buffer Type	Description	–5	Units
HSTL15_I	HSTL_15 class I 4mA drive	1.11	ns
HSTL15D_I	Differential HSTL 15 class I 4mA drive	1.11	ns
SSTL33_I	SSTL_3 class I	0.37	ns
SSTL33_II	SSTL_3 class II	0.29	ns
SSTL33D_I	Differential SSTL_3 class I	0.37	ns
SSTL33D_II	Differential SSTL_3 class II	0.29	ns
SSTL25_I	SSTL_2 class I 8mA drive	0.32	ns
SSTL25_II	SSTL_2 class II 16mA drive	0.29	ns
SSTL25D_I	Differential SSTL_2 class I 8mA drive	0.32	ns
SSTL25D_II	Differential SSTL_2 class II 16mA drive	0.29	ns
SSTL18_I	SSTL_1.8 class I	0.45	ns
SSTL18_II	SSTL_1.8 class II 8mA drive	0.44	ns
SSTL18D_I	Differential SSTL_1.8 class I	0.45	ns
SSTL18D_II	Differential SSTL_1.8 class II 8mA drive	0.44	ns
LVTTL33_4mA	LVTTL 4mA drive	0.28	ns
LVTTL33_8mA	LVTTL 8mA drive	0.11	ns
LVTTL33_12mA	LVTTL 12mA drive	0.04	ns
LVTTL33_16mA	LVTTL 16mA drive	0.14	ns
LVTTL33_20mA	LVTTL 20mA drive	0.10	ns
LVCMOS33_4mA	LVCMOS 3.3 4mA drive, fast slew rate	0.28	ns
LVCMOS33_8mA	LVCMOS 3.3 8mA drive, fast slew rate	0.11	ns
LVCMOS33_12mA	LVCMOS 3.3 12mA drive, fast slew rate	0.04	ns
LVCMOS33_16mA	LVCMOS 3.3 16mA drive, fast slew rate	0.14	ns
LVCMOS33_20mA	LVCMOS 3.3 20mA drive, fast slew rate	0.10	ns
LVCMOS25_4mA	LVCMOS 2.5 4mA drive, fast slew rate	0.13	ns
LVCMOS25_8mA	LVCMOS 2.5 8mA drive, fast slew rate	0.05	ns
LVCMOS25_12mA	LVCMOS 2.5 12mA drive, fast slew rate	0.00	ns
LVCMOS25_16mA	LVCMOS 2.5 16mA drive, fast slew rate	0.09	ns
LVCMOS25_20mA	LVCMOS 2.5 20mA drive, fast slew rate	0.05	ns
LVCMOS18_4mA	LVCMOS 1.8 4mA drive, fast slew rate	0.10	ns
LVCMOS18_8mA	LVCMOS 1.8 8mA drive, fast slew rate	0.02	ns
LVCMOS18_12mA	LVCMOS 1.8 12mA drive, fast slew rate	-0.03	ns
LVCMOS18_16mA	LVCMOS 1.8 16mA drive, fast slew rate	0.03	ns
LVCMOS15_4mA	LVCMOS 1.5 4mA drive, fast slew rate	0.11	ns
LVCMOS15_8mA	LVCMOS 1.5 8mA drive, fast slew rate	0.01	ns
LVCMOS12_2mA	LVCMOS 1.2 2mA drive, fast slew rate	0.09	ns
LVCMOS12_6mA	LVCMOS 1.2 6mA drive, fast slew rate	-0.02	ns
LVCMOS33_4mA	LVCMOS 3.3 4mA drive, slow slew rate	1.94	ns
LVCMOS33_8mA	LVCMOS 3.3 8mA drive, slow slew rate	1.65	ns
LVCMOS33_12mA	LVCMOS 3.3 12mA drive, slow slew rate	1.45	ns
LVCMOS33_16mA	LVCMOS 3.3 16mA drive, slow slew rate	1.69	ns
LVCMOS33_20mA	LVCMOS 3.3 20mA drive, slow slew rate	1.47	ns
LVCMOS25_4mA	LVCMOS 2.5 4mA drive, slow slew rate	1.90	ns

LA-LatticeXP2 Family Timing Adders[1, 2, 3] (Continued)

Over Recommended Operating Conditions

Buffer Type	Description	–5	Units
LVCMOS25_8mA	LVCMOS 2.5 8mA drive, slow slew rate	1.60	ns
LVCMOS25_12mA	LVCMOS 2.5 12mA drive, slow slew rate	1.40	ns
LVCMOS25_16mA	LVCMOS 2.5 16mA drive, slow slew rate	1.63	ns
LVCMOS25_20mA	LVCMOS 2.5 20mA drive, slow slew rate	1.41	ns
LVCMOS18_4mA	LVCMOS 1.8 4mA drive, slow slew rate	1.84	ns
LVCMOS18_8mA	LVCMOS 1.8 8mA drive, slow slew rate	1.52	ns
LVCMOS18_12mA	LVCMOS 1.8 12mA drive, slow slew rate	1.32	ns
LVCMOS18_16mA	LVCMOS 1.8 16mA drive, slow slew rate	1.55	ns
LVCMOS15_4mA	LVCMOS 1.5 4mA drive, slow slew rate	1.79	ns
LVCMOS15_8mA	LVCMOS 1.5 8mA drive, slow slew rate	0.01	ns
LVCMOS12_2mA	LVCMOS 1.2 2mA drive, slow slew rate	1.73	ns
LVCMOS12_6mA	LVCMOS 1.2 6mA drive, slow slew rate	-0.02	ns
PCI33	3.3V PCI	0.27	ns

1. Timing Adders are characterized but not tested on every device.
2. LVCMOS timing measured with the load specified in Switching Test Condition table.
3. All other standards tested according to the appropriate specifications.
4. These timing adders are measured with the recommended resistor values.

Timing v. A 0.12

sysCLOCK PLL Timing

Over Recommended Operating Conditions

Parameter	Description	Conditions	Min.	Typ.	Max.	Units
f_{IN}	Input Clock Frequency (CLKI, CLKFB)		10	—	435	MHz
f_{OUT}	Output Clock Frequency (CLKOP, CLKOS)		10	—	435	MHz
f_{OUT2}	K-Divider Output Frequency	CLKOK	0.078	—	217.5	MHz
		CLKOK2	3.3	—	145	MHz
f_{VCO}	PLL VCO Frequency		435	—	870	MHz
f_{PFD}	Phase Detector Input Frequency		10	—	435	MHz
AC Characteristics						
t_{DT}	Output Clock Duty Cycle	Default duty cycle selected [3]	45	50	55	%
t_{CPA}	Coarse Phase Adjust		-5	0	5	%
t_{PH}[4]	Output Phase Accuracy		-5	0	5	%
t_{OPJIT}[1]	Output Clock Period Jitter	f_{OUT} > 400 MHz	—	—	±50	ps
		100 MHz < f_{OUT} < 400 MHz	—	—	±125	ps
		f_{OUT} < 100 MHz	—	—	0.025	UIPP
t_{SK}	Input Clock to Output Clock Skew	N/M = integer	—	—	±240	ps
t_{OPW}	Output Clock Pulse Width	At 90% or 10%	1	—	—	ns
t_{LOCK}[2]	PLL Lock-in Time	25 to 435MHz	—	—	50	µs
		10 to 25MHz	—	—	100	µs
t_{IPJIT}	Input Clock Period Jitter		—	—	±200	ps
t_{FBKDLY}	External Feedback Delay		—	—	10	ns
t_{HI}	Input Clock High Time	90% to 90%	0.5	—	—	ns
t_{LO}	Input Clock Low Time	10% to 10%	0.5	—	—	ns
t_R / t_F	Input Clock Rise/Fall Time	10% to 90%	—	—	1	ns
t_{RSTKW}	Reset Signal Pulse Width (RSTK)		10	—	—	ns
t_{RSTW}	Reset Signal Pulse Width (RST)		500	—	—	ns

1. Jitter sample is taken over 10,000 samples of the primary PLL output with clean reference clock.
2. Output clock is valid after t_{LOCK} for PLL reset and dynamic delay adjustment.
3. Using LVDS output buffers.
4. Relative to CLKOP.

Timing v. A 0.12

LA-LatticeXP2 sysCONFIG Port Timing Specifications

Over Recommended Operating Conditions

Parameter	Description	Min	Max	Units
sysCONFIG POR, Initialization and Wake Up				
t_{ICFG}	Minimum Vcc to INITN High	—	50	ms
t_{VMC}	Time from tICFG to valid Master CCLK	—	2	µs
t_{PRGMRJ}	PROGRAMN Pin Pulse Rejection	—	12	ns
t_{PRGM}	PROGRAMN Low Time to Start Con•guration	50	—	ns
t_{DINIT}	PROGRAMN High to INITN High Delay	—	1	ms
$t_{DPPINIT}$	Delay Time from PROGRAMN Low to INITN Low	—	50	ns
$t_{DPPDONE}$	Delay Time from PROGRAMN Low to DONE Low	—	50	ns
t_{IODISS}	User I/O Disable from PROGRAMN Low	—	35	ns
t_{IOENSS}	User I/O Enabled Time from CCLK Edge During Wake-up Sequence	—	25	ns
t_{MWC}	Additional Wake Master Clock Signals after DONE Pin High	0	—	cycles
sysCONFIG SPI Port (Master)				
t_{CFGX}	INITN High to CCLK Low	—	1	µs
t_{CSSPI}	INITN High to CSSPIN Low	—	2	µs
t_{CSCCLK}	CCLK Low before CSSPIN Low	0	—	ns
t_{SOCDO}	CCLK Low to Output Valid	—	15	ns
t_{CSPID}	CSSPIN[0:1] Low to First CCLK Edge Setup Time	2cyc	600+6cyc	ns
f_{MAXSPI}	Max CCLK Frequency	—	20	MHz
t_{SUSPI}	SOSPI Data Setup Time Before CCLK	7	—	ns
t_{HSPI}	SOSPI Data Hold Time After CCLK	10	—	ns
sysCONFIG SPI Port (Slave)				
$f_{MAXSPIS}$	Slave CCLK Frequency	—	25	MHz
t_{RF}	Rise and Fall Time	50	—	mV/ns
t_{STCO}	Falling Edge of CCLK to SOSPI Active	—	20	ns
t_{STOZ}	Falling Edge of CCLK to SOSPI Disable	—	20	ns
t_{STSU}	Data Setup Time (SISPI)	8	—	ns
t_{STH}	Data Hold Time (SISPI)	10	—	ns
t_{STCKH}	CCLK Clock Pulse Width, High	0.02	200	µs
t_{STCKL}	CCLK Clock Pulse Width, Low	0.02	200	µs
t_{STVO}	Falling Edge of CCLK to Valid SOSPI Output	—	20	ns
t_{SCS}	CSSPISN High Time	25	—	ns
t_{SCSS}	CSSPISN Setup Time	25	—	ns
t_{SCSH}	CSSPISN Hold Time	25	—	ns

On-Chip Oscillator and Configuration Master Clock Characteristics

Over Recommended Operating Conditions

Parameter	Min.	Max.	Units
Master Clock Frequency	Selected value –30%	Selected value +30%	MHz
Duty Cycle	40	60	%

Timing v. A 0.12

Figure 3-9. Master SPI Configuration Waveforms

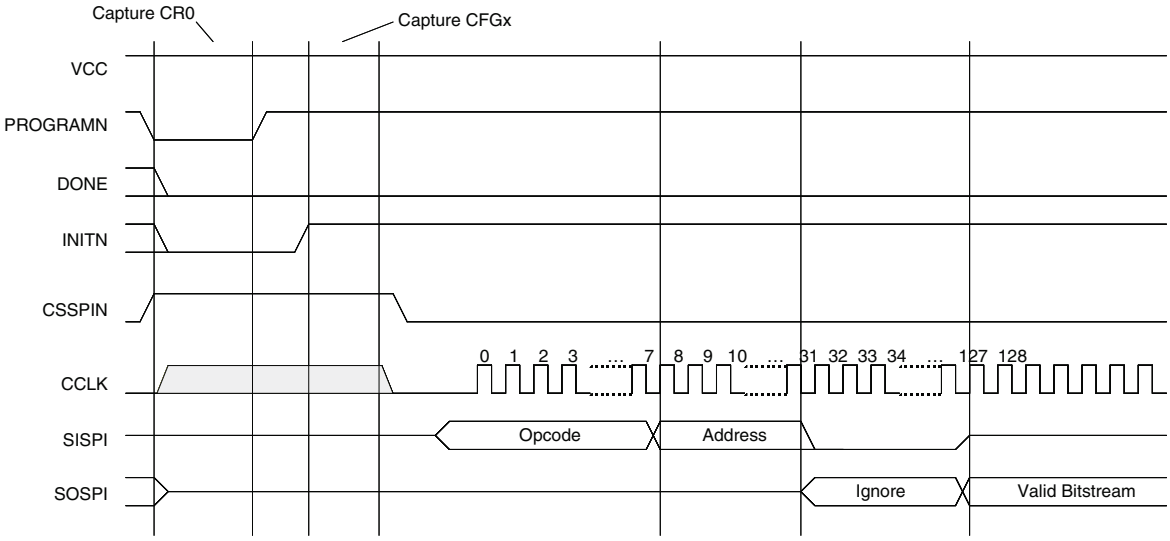

Flash Download Time (from On-Chip Flash to SRAM)

Over Recommended Operating Conditions

Symbol	Parameter		Min.	Typ.	Max.	Units
$t_{REFRESH}$	PROGRAMN Low-to-High. Transition to Done High.	LA-XP2-5	—	1.8	2.1	ms
		LA-XP2-8	—	1.9	2.3	ms
		LA-XP2-17	—	1.7	2.0	ms
	Power-up refresh when PROGRAMN is pulled up to V_{CC} (V_{CC}=V_{CC} Min)	LA-XP2-5	—	1.8	2.1	ms
		LA-XP2-8	—	1.9	2.3	ms
		LA-XP2-17	—	1.7	2.0	ms

Flash Program Time

Over Recommended Operating Conditions

Device	Flash Density		Program Time Typ.	Units
LA-XP2-5	1.2 M	TAG	1.0	ms
		Main Array	1.1	s
LA-XP2-8	2.0 M	TAG	1.0	ms
		Main Array	1.4	s
LA-XP2-17	3.6 M	TAG	1.0	ms
		Main Array	1.8	s

Flash Erase Time

Over Recommended Operating Conditions

Device	Flash Density		Erase Time Typ.	Units
LA-XP2-5	1.2 M	TAG	1.0	s
		Main Array	3.0	s
LA-XP2-8	2.0 M	TAG	1.0	s
		Main Array	4.0	s
LA-XP2-17	3.6 M	TAG	1.0	s
		Main Array	5.0	s

FlashBAK Time (from EBR to Flash)

Over Recommended Operating Conditions

Device	EBR Density (Bits)	Time (Typ.)	Units
LA-XP2-5	166 K	1.5	s
LA-XP2-8	221 K	1.5	s
LA-XP2-17	276 K	1.5	s

JTAG Port Timing Specifications

Over Recommended Operating Conditions

Symbol	Parameter	Min.	Max.	Units
f_{MAX}	TCK Clock Frequency	—	25	MHz
t_{BTCP}	TCK [BSCAN] clock pulse width	40	—	ns
t_{BTCPH}	TCK [BSCAN] clock pulse width high	20	—	ns
t_{BTCPL}	TCK [BSCAN] clock pulse width low	20	—	ns
t_{BTS}	TCK [BSCAN] setup time	8	—	ns
t_{BTH}	TCK [BSCAN] hold time	10	—	ns
t_{BTRF}	TCK [BSCAN] rise/fall time	50	—	mV/ns
t_{BTCO}	TAP controller falling edge of clock to valid output	—	10	ns
$t_{BTCODIS}$	TAP controller falling edge of clock to valid disable	—	10	ns
t_{BTCOEN}	TAP controller falling edge of clock to valid enable	—	10	ns
t_{BTCRS}	BSCAN test capture register setup time	8	—	ns
t_{BTCRH}	BSCAN test capture register hold time	25	—	ns
t_{BUTCO}	BSCAN test update register, falling edge of clock to valid output	—	25	ns
$t_{BTUODIS}$	BSCAN test update register, falling edge of clock to valid disable	—	25	ns
$t_{BTUPOEN}$	BSCAN test update register, falling edge of clock to valid enable	—	25	ns

Timing v. A 0.12

Figure 3-10. JTAG Port Timing Waveforms

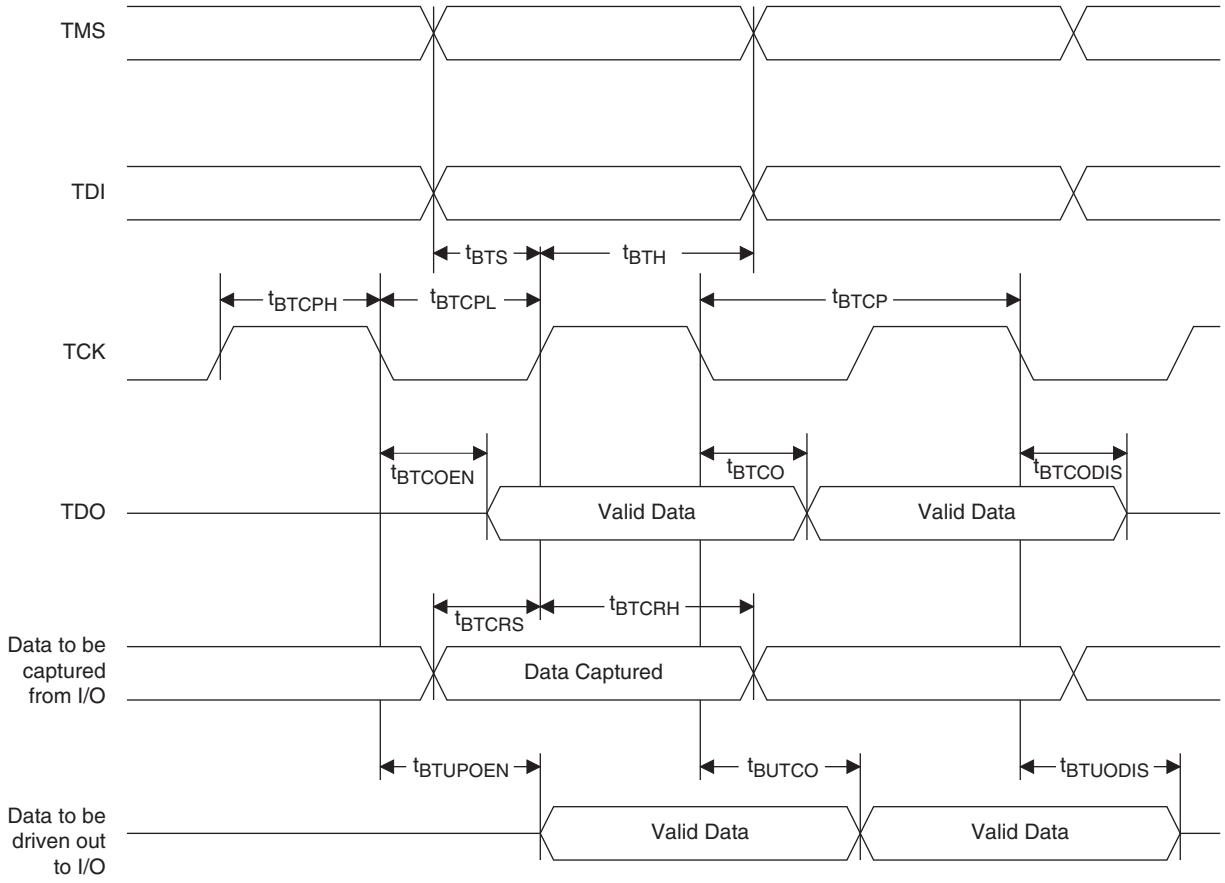

Switching Test Conditions

Figure 3-11 shows the output test load that is used for AC testing. The speci•c values for resistance, capacitance, voltage, and other test conditions are shown in Table 3-6.

Figure 3-11. Output Test Load, LVTTL and LVCMOS Standards

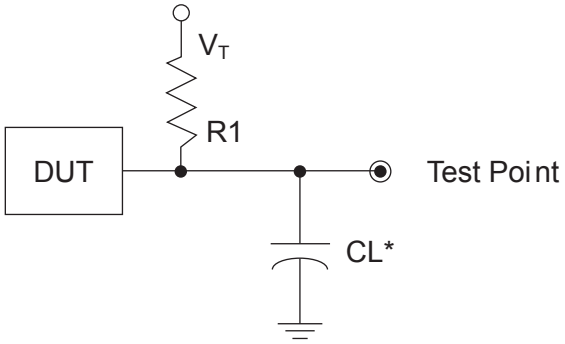

*CL Includes Test Fixture and Probe Capacitance

Table 3-6. Test Fixture Required Components, Non-Terminated Interfaces

Test Condition	R_1	R_2	C_L	Timing Ref.	V_T
LVTTL and other LVCMOS settings (L -> H, H -> L)	∞	∞	0pF	LVCMOS 3.3 = 1.5 V	—
				LVCMOS 2.5 = $V_{CCIO}/2$	—
				LVCMOS 1.8 = $V_{CCIO}/2$	—
				LVCMOS 1.5 = $V_{CCIO}/2$	—
				LVCMOS 1.2 = $V_{CCIO}/2$	—
LVCMOS 2.5 I/O (Z -> H)	∞	1MΩ		$V_{CCIO}/2$	—
LVCMOS 2.5 I/O (Z -> L)	1MΩ	∞		$V_{CCIO}/2$	V_{CCIO}
LVCMOS 2.5 I/O (H -> Z)	∞	100		$V_{OH} – 0.10$	—
LVCMOS 2.5 I/O (L -> Z)	100	∞		$V_{OL} + 0.10$	V_{CCIO}

Note: Output test conditions for all other interfaces are determined by the respective standards.

Signal Descriptions

Signal Name	I/O	Description
General Purpose		
P[Edge] [Row/Column Number*]_[A/B]	I/O	[Edge] indicates the edge of the device on which the pad is located. Valid edge designations are L (Left), B (Bottom), R (Right), T (Top). [Row/Column Number] indicates the PFU row or the column of the device on which the PIC exists. When Edge is T (Top) or B (Bottom), only need to specify Row Number. When Edge is L (Left) or R (Right), only need to specify Column Number. [A/B] indicates the PIO within the PIC to which the pad is connected. Some of these user-programmable pins are shared with special function pins. These pins, when not used as special purpose pins, can be programmed as I/Os for user logic. During configuration the user-programmable I/Os are tri-stated with an internal pull-up resistor enabled. If any pin is not used (or not bonded to a package pin), it is also tri-stated with an internal pull-up resistor enabled after configuration.
GSRN	I	Global RESET signal (active low). Any I/O pin can be GSRN.
NC	—	No connect.
GND	—	Ground. Dedicated pins.
V_{CC}	—	Power supply pins for core logic. Dedicated pins.
V_{CCAUX}	—	Auxiliary power supply pin. This dedicated pin powers all the differential and referenced input buffers.
V_{CCPLL}	—	PLL supply pins. csBGA, PQFP and TQFP packages only.
V_{CCIOx}	—	Dedicated power supply pins for I/O bank x.
V_{REF1_x}, V_{REF2_x}	—	Reference supply pins for I/O bank x. Pre-determined pins in each bank are assigned as V_{REF} inputs. When not used, they may be used as I/O pins.
PLL and Clock Functions (Used as user programmable I/O pins when not in use for PLL or clock pins)		
[LOC][num]_V_{CCPLL}	—	Power supply pin for PLL: LLC, LRC, URC, ULC, num = row from center.
[LOC][num]_GPLL[T, C]_IN_A	I	General Purpose PLL (GPLL) input pads: LLC, LRC, URC, ULC, num = row from center, T = true and C = complement, index A,B,C...at each side.
[LOC][num]_GPLL[T, C]_FB_A	I	Optional feedback GPLL input pads: LLC, LRC, URC, ULC, num = row from center, T = true and C = complement, index A,B,C...at each side.
PCLK[T, C]_[n:0]_[3:0]	I	Primary Clock pads, T = true and C = complement, n per side, indexed by bank and 0,1,2,3 within bank.
[LOC]DQS[num]	I	DQS input pads: T (Top), R (Right), B (Bottom), L (Left), DQS, num = ball function number. Any pad can be configured to be output.
Test and Programming (Dedicated Pins)		
TMS	I	Test Mode Select input, used to control the 1149.1 state machine. Pull-up is enabled during configuration.
TCK	I	Test Clock input pin, used to clock the 1149.1 state machine. No pull-up enabled.
TDI	I	Test Data in pin. Used to load data into device using 1149.1 state machine. After power-up, this TAP port can be activated for configuration by sending appropriate command. (Note: once a configuration port is selected it is locked. Another configuration port cannot be selected until the power-up sequence). Pull-up is enabled during configuration.

© 2014 Lattice Semiconductor Corp. All Lattice trademarks, registered trademarks, patents, and disclaimers are as listed at www.latticesemi.com/legal. All other brand or product names are trademarks or registered trademarks of their respective holders. The specifications and information herein are subject to change without notice.

Signal Descriptions (Continued)

Signal Name	I/O	Description
TDO	O	Output pin. Test Data Out pin used to shift data out of a device using 1149.1.
VCCJ	—	Power supply pin for JTAG Test Access Port.
Configuration Pads (Used during sysCONFIG)		
CFG[1:0]	I	Mode pins used to specify configuration mode values latched on rising edge of INITN. During configuration, an internal pull-up is enabled.
INITN[1]	I/O	Open Drain pin. Indicates the FPGA is ready to be configured. During configuration, a pull-up is enabled.
PROGRAMN	I	Initiates configuration sequence when asserted low. This pin always has an active pull-up.
DONE	I/O	Open Drain pin. Indicates that the configuration sequence is complete, and the startup sequence is in progress.
CCLK	I/O	Configuration Clock for configuring an FPGA in sysCONFIG mode.
SISPI[2]	I/O	Input data pin in slave SPI mode and Output data pin in Master SPI mode.
SOSPI[2]	I/O	Output data pin in slave SPI mode and Input data pin in Master SPI mode.
CSSPIN[2]	O	Chip select for external SPI Flash memory in Master SPI mode. This pin has a weak internal pull-up.
CSSPISN	I	Chip select in Slave SPI mode. This pin has a weak internal pull-up.
TOE	I	Test Output Enable tristates all I/O pins when driven low. This pin has a weak internal pull-up, but when not used an external pull-up to V_{CC} is recommended.

1. If not actively driven, the internal pull-up may not be sufficient. An external pull-up resistor of 4.7k to 10k ohms is recommended.
2. When using the device in Master SPI mode, it must be mutually exclusive from JTAG operations (i.e. TCK tied to GND) or the JTAG TCK must be free-running when used in a system JTAG test environment. If Master SPI mode is used in conjunction with a JTAG download cable, the device power cycle is required after the cable is unplugged.

PICs and DDR Data (DQ) Pins Associated with the DDR Strobe (DQS) Pin

PICs Associated with DQS Strobe	PIO Within PIC	DDR Strobe (DQS) and Data (DQ) Pins
For Left and Right Edges of the Device		
P[Edge] [n-4]	A	DQ
	B	DQ
P[Edge] [n-3]	A	DQ
	B	DQ
P[Edge] [n-2]	A	DQ
	B	DQ
P[Edge] [n-1]	A	DQ
	B	DQ
P[Edge] [n]	A	[Edge]DQSn
	B	DQ
P[Edge] [n+1]	A	DQ
	B	DQ
P[Edge] [n+2]	A	DQ
	B	DQ
P[Edge] [n+3]	A	DQ
	B	DQ
For Top and Bottom Edges of the Device		
P[Edge] [n-4]	A	DQ
	B	DQ
P[Edge] [n-3]	A	DQ
	B	DQ
P[Edge] [n-2]	A	DQ
	B	DQ
P[Edge] [n-1]	A	DQ
	B	DQ
P[Edge] [n]	A	[Edge]DQSn
	B	DQ
P[Edge] [n+1]	A	DQ
	B	DQ
P[Edge] [n+2]	A	DQ
	B	DQ
P[Edge] [n+3]	A	DQ
	B	DQ
P[Edge] [n+4]	A	DQ
	B	DQ

Notes:
1. “n” is a row PIC number.
2. The DDR interface is designed for memories that support one DQS strobe up to 16 bits of data for the left and right edges and up to 18 bits of data for the top and bottom edges. In some packages, all the potential DDR data (DQ) pins may not be available. PIC numbering definitions are provided in the “Signal Names” column of the Signal Descriptions table.

Pin Information Summary

Pin Type		LA-XP2-5				LA-XP2-8				LA-XP2-17	
		132 csBGA	144 TQFP	208 PQFP	256 ftBGA	132 csBGA	144 TQFP	208 PQFP	256 ftBGA	208 PQFP	256 ftBGA
Single Ended User I/O		86	100	146	172	86	100	146	201	146	201
Differential Pair User I/O	Normal	35	39	57	66	35	39	57	77	57	77
	Highspeed	8	11	16	20	8	11	16	23	16	23
Configuration	TAP	5	5	5	5	5	5	5	5	5	5
	Muxed	9	9	9	9	9	9	9	9	9	9
	Dedicated	1	1	1	1	1	1	1	1	1	1
Non Configuration	Muxed	5	5	7	7	7	7	9	9	11	11
	Dedicated	1	1	1	1	1	1	1	1	1	1
Vcc		6	4	9	6	6	4	9	6	9	6
Vccaux		4	4	4	4	4	4	4	4	4	4
VCCPLL		2	2	2	-	2	2	2	-	4	-
VCCIO	Bank0	2	2	2	2	2	2	2	2	2	2
	Bank1	1	1	2	2	1	1	2	2	2	2
	Bank2	2	2	2	2	2	2	2	2	2	2
	Bank3	1	1	2	2	1	1	2	2	2	2
	Bank4	1	1	2	2	1	1	2	2	2	2
	Bank5	2	2	2	2	2	2	2	2	2	2
	Bank6	1	1	2	2	1	1	2	2	2	2
	Bank7	2	2	2	2	2	2	2	2	2	2
GND, GND0-GND7		15	15	20	20	15	15	22	20	22	20
NC		—	—	4	31	—	—	2	2	—	2
Single Ended/ Differential I/O per Bank	Bank0	18/9	20/10	20/10	26/13	18/9	20/10	20/10	28/14	20/10	28/14
	Bank1	4/2	6/3	18/9	18/9	4/2	6/3	18/9	22/11	18/9	22/11
	Bank2	16/8	18/9	18/9	22/11	16/8	18/9	18/9	26/13	18/9	26/13
	Bank3	4/2	4/2	16/8	20/10	4/2	4/2	16/8	24/12	16/8	24/12
	Bank4	8/4	8/4	18/9	18/9	8/4	8/4	18/9	26/13	18/9	26/13
	Bank5	14/7	18/9	20/10	24/12	14/7	18/9	20/10	24/12	20/10	24/12
	Bank6	6/3	8/4	18/9	22/11	6/3	8/4	18/9	27/13	18/9	27/13
	Bank7	16/8	18/9	18/9	22/11	16/8	18/9	18/9	24/12	18/9	24/12
True LVDS Pairs Bonding Out per Bank	Bank0	0	0	0	0	0	0	0	0	0	0
	Bank1	0	0	0	0	0	0	0	0	0	0
	Bank2	3	4	4	5	3	4	4	6	4	6
	Bank3	1	1	4	5	1	1	4	6	4	6
	Bank4	0	0	0	0	0	0	0	0	0	0
	Bank5	0	0	0	0	0	0	0	0	0	0
	Bank6	1	2	4	5	1	2	4	6	4	6
	Bank7	3	4	4	5	3	4	4	5	4	5

Pin Information Summary (Continued)

Pin Type		LA-XP2-5				LA-XP2-8				LA-XP2-17	
		132 csBGA	144 TQFP	208 PQFP	256 ftBGA	132 csBGA	144 TQFP	208 PQFP	256 ftBGA	208 PQFP	256 ftBGA
DDR Banks Bonding Out per I/O Bank[1]	Bank0	1	1	1	1	1	1	1	1	1	1
	Bank1	0	0	1	1	0	0	1	1	1	1
	Bank2	1	1	1	1	1	1	1	1	1	1
	Bank3	0	0	1	1	0	0	1	1	1	1
	Bank4	0	0	1	1	0	0	1	1	1	1
	Bank5	1	1	1	1	1	1	1	1	1	1
	Bank6	0	0	1	1	0	0	1	1	1	1
	Bank7	1	1	1	1	1	1	1	1	1	1
PCI capable I/Os Bonding Out per Bank	Bank0	18	20	20	26	18	20	20	28	20	28
	Bank1	4	6	18	18	4	6	18	22	18	22
	Bank2	0	0	0	0	0	0	0	0	0	0
	Bank3	0	0	0	0	0	0	0	0	0	0
	Bank4	8	8	18	18	8	8	18	26	18	26
	Bank5	14	18	20	24	14	18	20	24	20	24
	Bank6	0	0	0	0	0	0	0	0	0	0
	Bank7	0	0	0	0	0	0	0	0	0	0

1. Minimum requirement to implement a fully functional 8-bit wide DDR bus. Available DDR interface consists of at least 12 I/Os (1 DQS + 1 DQSB + 8 DQs + 1 DM + Bank VREF1).

Logic Signal Connections

Package pinout information can be found on the LatticeXP2 product pages on the Lattice website at www.lattice-semi.com/products/fpga/xp2 and in the Lattice Diamond design software.

Thermal Management

Thermal management is recommended as part of any sound FPGA design methodology. To assess the thermal characteristics of a system, Lattice specifies a maximum allowable junction temperature in all device data sheets. Designers must complete a thermal analysis of their specific design to ensure that the device and package do not exceed the junction temperature limits. Refer to the Thermal Management document to find the device/package-specific thermal values.

For Further Information

- TN1139 - Power Estimation and Management for LatticeXP2 Devices
- Power Calculator tool included with Lattice Diamond design software or as a standalone download from www.latticesemi.com/software

LA-LatticeXP2 Family Data Sheet Ordering Information

August 2014 Data Sheet DS1024

Part Number Description

LAXP2 – XX E – 5 XXXXX X

Device Family
LA-XP2 Automotive FPGA

Logic Capacity
5 = 5K LUTs
8 = 8K LUTs
17 = 17K LUTs

Supply Voltage
E = 1.2V

Speed

Grade
E = Automotive

Package
MN132 = 132-ball Lead-Free csBGA
TN144 = 144-pin Lead-Free TQFP
QN208 = 208-pin Lead-Free PQFP
FTN256 = 256-ball Lead-Free ftBGA

Ordering Information

The LA-LatticeXP2 devices are marked with a single automotive temperature grade, as shown below.

Automotive Disclaimer

Products are not designed, intended or warranted to be fail-safe and are not designed, intended or warranted for use in applications related to the deployment of airbags. Further, products are not intended to be used, designed or warranted for use in applications that affect the control of the vehicle unless there is a fail-safe or redundancy feature and also a warning signal to the operator of the vehicle upon failure. Use of products in such applications is fully at the risk of the customer, subject to applicable laws and regulations governing limitations on product liability.

© 2014 Lattice Semiconductor Corp. All Lattice trademarks, registered trademarks, patents, and disclaimers are as listed at www.latticesemi.com/legal. All other brand or product names are trademarks or registered trademarks of their respective holders. The specifications and information herein are subject to change without notice.

Lead-Free Packaging

Part Number	Voltage	Grade	Package	Pins	Temp.	LUTs (k)
LAXP2-5E-5MN132E	1.2V	-5	Lead-Free csBGA	132	AUTO	5
LAXP2-5E-5TN144E	1.2V	-5	Lead-Free TQFP	144	AUTO	5
LAXP2-5E-5QN208E	1.2V	-5	Lead-Free PQFP	208	AUTO	5
LAXP2-5E-5FTN256E	1.2V	-5	Lead-Free ftBGA	256	AUTO	5

Part Number	Voltage	Grade	Package	Pins	Temp.	LUTs (k)
LAXP2-8E-5MN132E	1.2V	-5	Lead-Free csBGA	132	AUTO	8
LAXP2-8E-5TN144E	1.2V	-5	Lead-Free TQFP	144	AUTO	8
LAXP2-8E-5QN208E	1.2V	-5	Lead-Free PQFP	208	AUTO	8
LAXP2-8E-5FTN256E	1.2V	-5	Lead-Free ftBGA	256	AUTO	8

Part Number	Voltage	Grade	Package	Pins	Temp.	LUTs (k)
LAXP2-17E-5QN208E	1.2V	-5	Lead-Free PQFP	208	AUTO	17
LAXP2-17E-5FTN256E	1.2V	-5	Lead-Free ftBGA	256	AUTO	17

LA-LatticeXP2 Family Data Sheet Supplemental Information

August 2014 Data Sheet DS1024

For Further Information

A variety of technical notes for the LA-LatticeXP2 FPGA family are available on the Lattice website.

- TN1136, LatticeXP2 sysIO Usage Guide
- TN1137, LatticeXP2 Memory Usage Guide
- TN1138, LatticeXP2 High Speed I/O Interface
- TN1126, LatticeXP2 sysCLOCK PLL Design and Usage Guide
- TN1139, Power Estimation and Management for LatticeXP2 Devices
- TN1140, LatticeXP2 sysDSP Usage Guide
- TN1141, LatticeXP2 sysCONFIG Usage Guide
- TN1142, LatticeXP2 Configuration Encryption and Security Usage Guide
- TN1143, LatticeXP2 TransFR I/O
- TN1087, Minimizing System Interruption During Configuration Using TransFR Technology
- TN1220, LatticeXP2 Dual Boot Feature
- TN1130, LatticeXP2 Soft Error Detection (SED) Usage Guide

For further information on interface standards refer to the following web sites:

- JEDEC Standards (LVTTL, LVCMOS, SSTL, HSTL): www.jedec.org
- PCI: www.pcisig.com

© 2014 Lattice Semiconductor Corp. All Lattice trademarks, registered trademarks, patents, and disclaimers are as listed at www.latticesemi.com/legal. All other brand or product names are trademarks or registered trademarks of their respective holders. The specifications and information herein are subject to change without notice.