PART NO.	LARGE FLANGE LED TYPE	"A" DIA.	"B"	"C"	"D" DIA.	"E"	MOUNTING HOLE DIA.	PANEL THICKNESS
LEDCR-104	T-1	.21 (5.3)	.21 (5.3)	.015 (0.38)	.24 (6.1)	.14 (3.6)	.174-.180 (4.4-4.6)	.032-.125 (0.8-3.2)
LEDCR-174	T-1 3/4	.30 (7.6)	.26 (6.6)	.030 (0.76)	.35 (8.9)	.16 (4.1)	.267-.273 (6.8-6.9)	

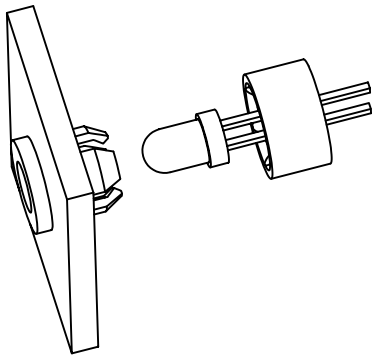

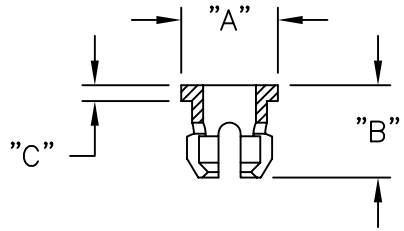

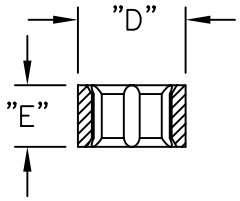

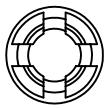

CLIP

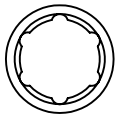

RING

NOTES:
1. MATERIAL:
   LEDCR-104 CLIP AND RING: NYLON 6/6 (RMS-43) UL94-V0.
   LEDCR-174, CLIP: NYLON 6/6 (RMS-43) UL94-V0,
   RING: NYLON 6/6 (RMS-48) UL94-V2.
2. COLOR: BLACK.

REV	DESCRIPTION	ENGR DATE
C	SEE ECN #979 FOR CHANGES	SK 04.12.05
B	COMPLETELY REDRAWN	SM 05.16.02
A	CHANGED FILE NO.	SM 03.18.02

TITLE: LED HOLDER SET (CLIP AND RING)

DWG IN IN (MM)

TOLERANCES UNLESS NOTED
.XX=±.010
.XXX=±.005
FRAC=±1/64
ANG=±1°

FILE # LEDCR
MAT'L: SEE NOTES
RE: RICHCO, INC.

DWN: J.B.
DT: 12-12-96
APP:
DT:

RICHCO INC.
PO BOX 804238,CHICAGO,60680
(773) 539-4060

FINAL

PART # SEE TABLE

PRINT TYPE CA