CONFIGURATION CONTROL LEVEL:	2

CAD GENERATED DRAWING	DCN CONTROLLED DOCUMENT	DWG.NO. M39012/83-3006

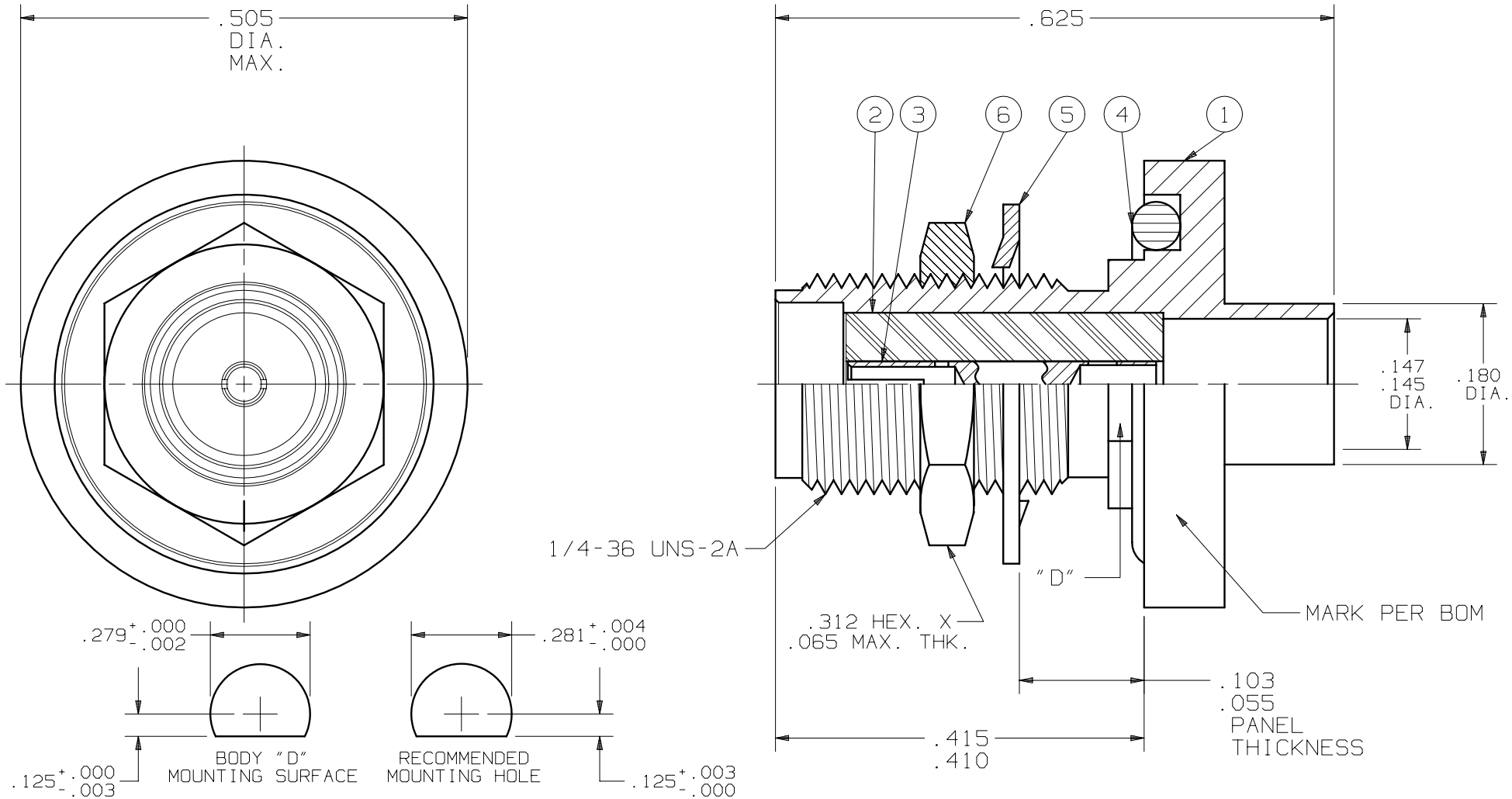

NOTES:
1. MATING END DIMENSIONS PER MD-107.
2. PACKAGE ALL ITEM'S LOOSE WITH CONNECTOR.

SYM.	DESCRIPTION	DATE	APPR.
-	REL.NRN 32122	9/04	BRT

UNLESS OTHERWISE SPECIFIED:
1) ALL DIMENSIONS ARE AFTER PLATING.
2) BREAK CORNERS & EDGES .005 R.MAX.
3) CHAM. 1st & LAST THDS.
4) SURFACE ROUGHNESS 63 √ MIL-STD-10.
5) DIAS. ON COMMON CENTERS TO BE CONCENTRIC WITHIN .005 T.I.R.
6) REMOVE ALL BURRS.

DRAWN: BRT 09/17/04
CHECKED: BRT 09/17/04
APPROVED: BRT 09/17/04

DIMENSIONS ARE IN INCHES
TOLERANCES:

DECIMALS	FRACTIONAL	ANGULAR
.X ±.030	±1/64	X° ±1°0′
.XX ±.015		X°X′ ±15′
.XXX ±.005		

MATERIAL: SEE BOM
FINISH: SEE BOM
AREA: N/A

SIZE	CAGE NO.	SCALE
A	95077	6X

SV Microwave, Inc.
2400 Centrepark West Drive, Suite 100
West Palm Beach, FL 33409

TITLE: SMA JACK BULKHEAD MOUNT FOR RG-402 CABLE

DWG.NO. SHT.1 OF 2 M39012/83-3006